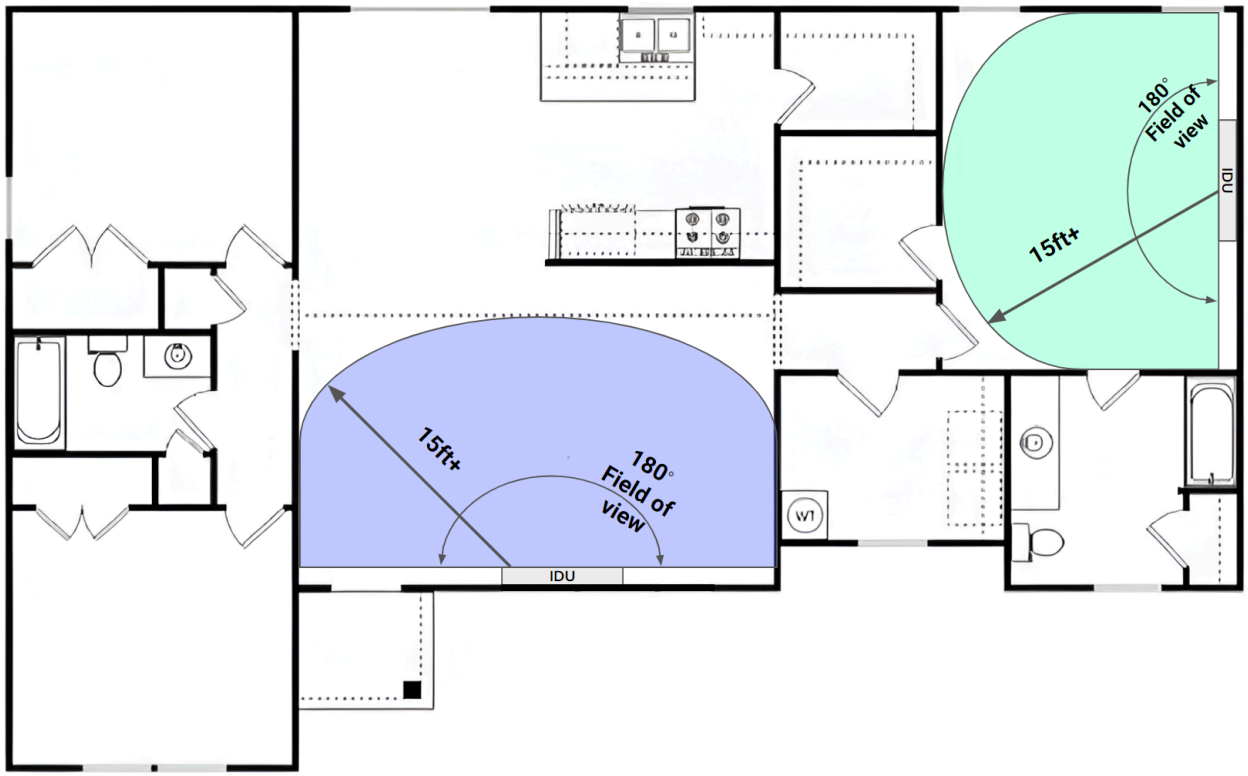

Operations

How to power on the heat pump system

Power to the system is routed from your home circuit breaker panel to the outdoor unit. (In some homes there may be multiple circuit breaker panels. Consult your professional installer or electrician for guidance.) For some installations, there is an AC service disconnect switch mounted next to the outdoor unit.

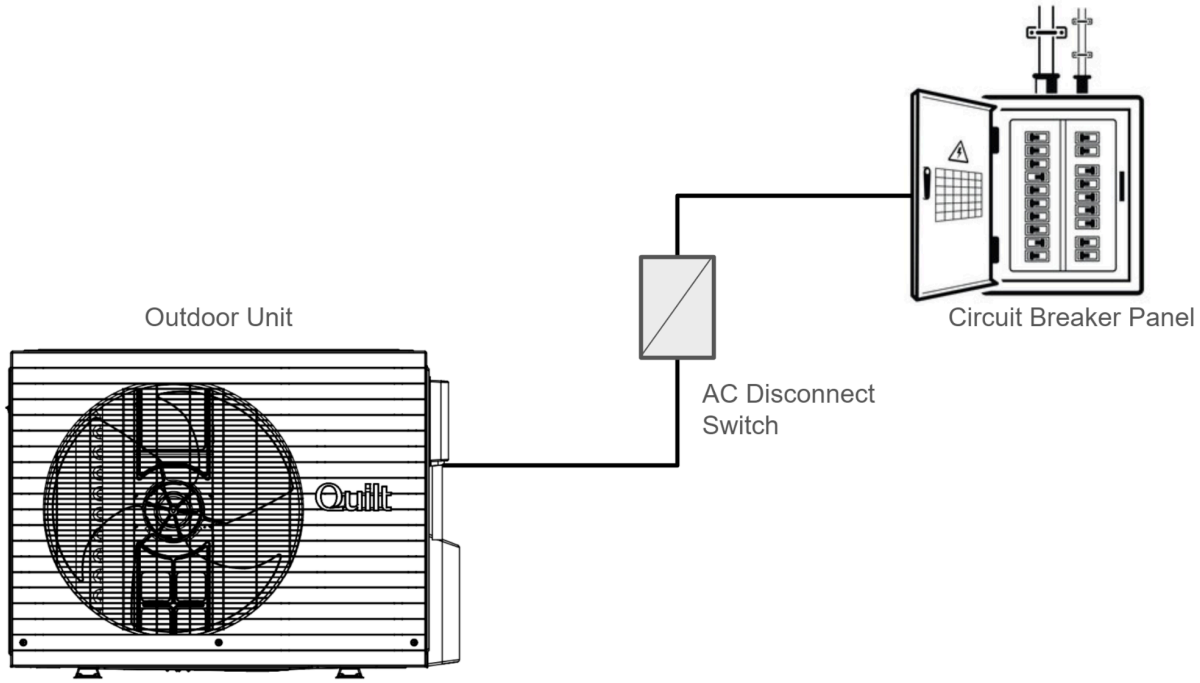

To power ON the system:

1. Locate circuit breaker panel for the specific Outdoor Unit.
2. Flip the circuit breaker for the specific Outdoor Unit to the “ON” state. The Outdoor Units should be labeled on the panel.
3. Ensure the AC service disconnect is in the “ON” state. (For some installations where the circuit breaker panel is closer to the outdoor unit, there may not be an AC service disconnect.)
4. There should then be power to the system.
5. Do not remove any protective covers on the system while it is powered on or without consulting a professional.

How to power off the heat pump system

To power OFF the system:

6. Locate circuit breaker panel for the specific Outdoor Unit.
7. Flip the circuit breaker for the specific Outdoor Unit to the “OFF” state. The Outdoor Unit should be labeled on the panel.
8. The system should now be OFF and non-functioning.
9. Do not remove any protective covers on the system without consulting a professional.

To power OFF the system for servicing:

10. Locate circuit breaker panel for the specific Outdoor Unit.
11. Flip the circuit breaker for the specific Outdoor Unit to the “OFF” state. The ODUs should be labeled on the panel.

12. Put the AC service disconnect in the “OFF” state. (For some installations where the circuit breaker panel is in closer proximity to the outdoor unit, there may not be an AC service disconnect.
    a. Putting the AC service disconnect into the “OFF” state depends on the type of AC service disconnect installed; some might require pulling a lever down to the “OFF” state; Some might require lifting a cover and pulling out a fuse.
    b. If you are unsure then please consult your professional installer.
13. The system should now be in a state where it can be serviced. Consult further documentation on servicing before proceeding.

How to control your space

Once the system is properly installed, with the Quilt Sense connected to the Indoor Unit and the Indoor Unit connected to and powered through the Outdoor Unit, the system is ready to use with the Quilt app or the Dial.

The app and the Dial allow you to control multiple components of your Quilt system, including target temperatures, heating, cooling, fan,and light bar. Additionally the app and Dial include preset Modes that reflect common control combinations (such as target temperature, fan angle and speed, and heating and cooling states) based on whether a room is occupied or unoccupied. The app also allows you to set custom schedules and enable or disable presence detection, both at the room and whole-home levels. The system is preprogrammed to work out-of-the-box. You can customize these features to your individual preferences.

The basics

The Quilt system is designed to give you control over the microclimates in your home. Each room in which an Indoor Unit is placed shows up as a “space” in your app. You can control your spaces individually, and in some cases you can control multiple spaces together, such as in setting all spaces to “Off” should you leave for vacation. Options to control the space are:

Controls	**Description**
Heating only	Heats your space up to the temperature you set. Will not cool even if the temperature of the space goes above your target temperature **TIP:** Turn on both heating and cooling to have your system maintain the set temperature automatically. Turn off both heating and cooling to only use the fan function
Cooling only	Cools your space down to the temperature you set. Will not heat even if the temperature of the space cools below your target temperature

	TIP: Turn on both heating and cooling to have your system maintain the set temperature automatically. Turn off both heating and cooling to only use the fan function
Fan only	Operates the fan only
Fan speed	Sets how fast the fan moves. If set to Auto, the fan may change speeds as the temperature in the space shifts over time. If set to a specific speed, the fan will only run at that speed until changed.
Fan angle	Shifts the direction of airflow
Light	Turns the light bar on and off, and controls the color and brightness of the light bar
Presence	Toggles between allowing your unit to detect when there's a person in the room, and turning this feature off
Modes	Preset how each Indoor Unit behaves. You can schedule these modes, and control whether you want to have these modes turn on automatically with presence detection

Modes

For any Mode, you can configure target temperatures, the operating state of the system (heat, cool, heat or cool, and fan-only), fan angle and speed, and light based on whether a space is occupied. You can also set schedules for these Modes. Use the app to set these modes. (For the latest on how to operate the app, go to www.quilt.com/support/app.) Then use the app or the Dial to switch between modes.

To use the Dial, turn the ring around the Dial's display, swipe on the screen, or touch and tap the screen. Make sure the Dial has the latest version of software. Go to quilt.com/support/dial for the most up-to-date explanation of operating modes and icons.

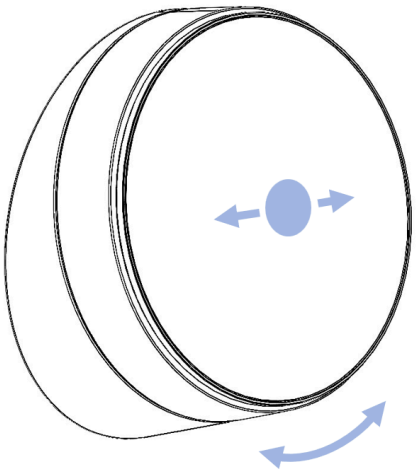

Modes	Description
Off	The Indoor Unit will be turned off until turned back on. The only exception to this behavior is if Off Mode is scheduled, which can be useful for a planned absence from the home, such as when going on a trip. The fan and light bar can still be controlled separately in off mode. **Note:** Even while the unit is turned off, the unit will still activate Safety Heating if necessary, as long as it's connected to power. See description of Safety Heating below
Active	Mode configuration for when the Quilt system detects someone is in the room
Sleep	Mode configuration for when you want to use a room for sleeping. Schedule your sleep in this mode
Away	Mode configuration for when the Quilt system detects that a space is unoccupied
Default	Triggered when the Indoor Unit is turned on using the Power Button on the Sense.The Quilt System defaults to maintaining a temperature range of 68°F (20°C) to 77°F (25°C).
Safety Heating mode	When the indoor temperature is under 46 deg, the unit will automatically turn on heating to avoid unwanted consequences of freezing temperatures in the home, such as pipes freezing. As long as the Indoor Unit has power, this mode will activate even if the Indoor Unit is off. If you'd like to disable Safety Heating, you can do so in the app.

Other ways to control your Indoor Unit:

In the case of the app or Dial not communicating with the Quilt system, or is otherwise unavailable, press the **Power Button** on the Quilt Sense to turn Indoor Unit on or off:

- When the Indoor Unit is on and running normally, pressing the power button once will turn the Indoor Unit off. **Note:** Even when the Indoor Unit is off, as long as the Quilt heat pump system is powered (see Operations section above), the Indoor Unit will still activate **Safety Heating** if necessary (see Safety Heating under Temperature Modes section above)
- When the Indoor Unit is off, pressing the power button once will turn the Indoor Unit on and into **Default mode.** In this mode, the system will maintain temperature between 68°F (20°C) and 77°F (25°C), heating or cooling as needed.
- Use the app or Dial to override the **Default mode** once the Indoor Unit is turned back on.
- If there is an issue with controlling the Indoor Unit through the app or Dial, you can press the power button once to turn off the Indoor Unit and press again to turn the unit on to **Default mode**.
- Holding the power button for 8 seconds will restart the Quilt Sense module. This may be done if the system is not responding to the mobile app or Dial.

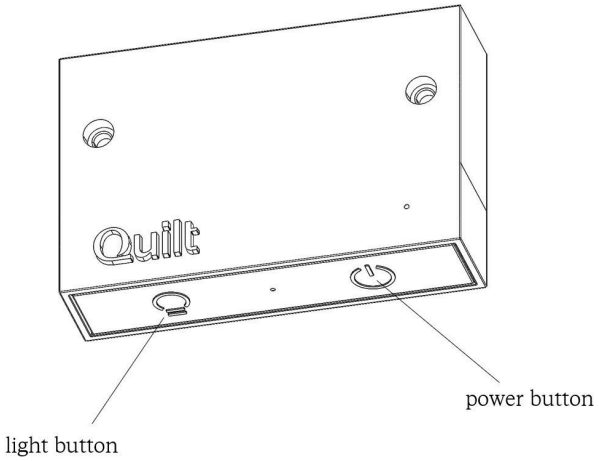

Light bar

The Indoor Unit comes with an LED light bar. You can turn the light bar on and off, and control the colors of the light bar in the app and Dial.You can preset the light bar in **Modes**. Pressing the **Light Button** on the Quilt Sense will also turn the light bar on and off.

How to perform a factory reset:

If the Indoor Unit and thermostat are not performing as expected, you can do a factory reset of the Dial and of the Quilt Sense. To factory reset the Dial, swipe to the “settings” screen and then click “factory reset”. Acknowledge and the factory reset will start.

If you are not able to reset with the user interface then the device can be manually reset by following these steps.

- Turn the Dial over and remove the rubber foot by prying it off
    - Or remove the Dial from the wall mount, by pulling it off at a 15 degree angle (slightly up, but mostly perpendicular to the wall). Do not attempt to pry the Dial off the wall mount by tilting.

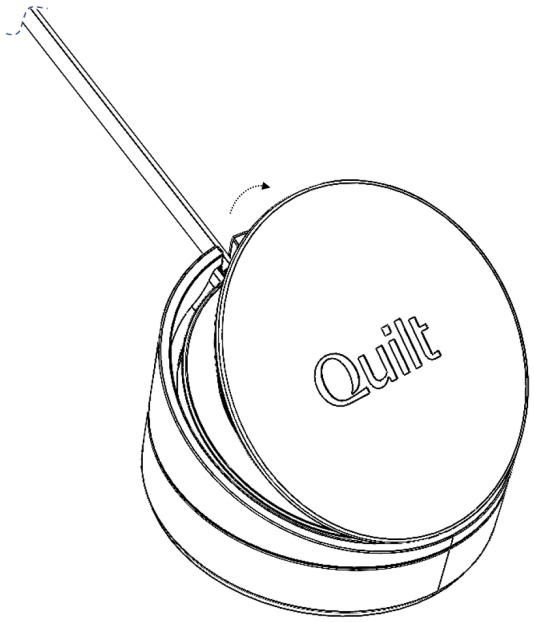

- Maintain power connection to the dial, do not disconnect the power
- Press and hold the button for >3s using a small tool

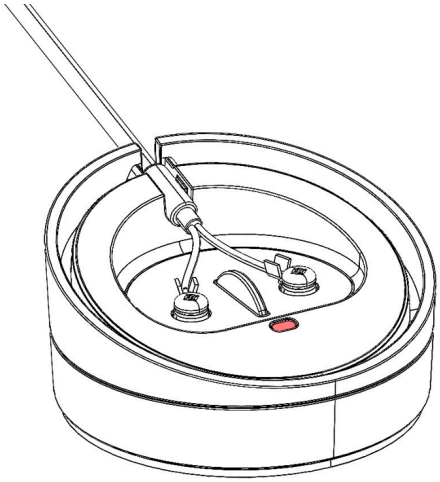

- The Dial should reset back to factory default
- Reset up the Dial

To perform a factory reset on the Quilt Sense, hold down the light button and power button simultaneously for 3 seconds.

Maintenance and Cleaning

- For routine checks and maintenance, Quilt recommends:
    - Once a month:
        - Inspect the Outdoor Unit for debris or dirt build up around the grate
        - Inspect the Indoor Unit filters for dirt build up and clean as needed
    - Once every three months or as needed:
        - Clean the Indoor Unit filters
    - Once every six months or as needed:
        - Inspect the lineset and wires coming out of the Outdoor Unit for damage.
        - Clean and remove dust and brush from the Outdoor Unit
        - Clean the outside of the Indoor Unit
        - Listen to the Outdoor Unit while it is running. If it sounds out of the ordinary, schedule a qualified professional service technician for a maintenance visit
    - Once every year:
        - Have a qualified professional service technician conduct yearly maintenance and inspection.

Cleaning the Indoor Unit Filters

- Follow the procedure in the Installation section for removing the filters

- Remove the dirt from the filter with a vacuum cleaner.
- When dirt cannot be removed by vacuum cleaner:
    - Take the filters to the sink and spray them down with warm water to loosen the debris
    - If necessary, gently scrub using a sponge or soft brush and soapy water. Any common dish detergent will work.
- Allow the filters to air dry completely before replacing

Cleaning the outside of the Indoor Unit and front panel

- Turn the heat pump system off. (See Operations: How to power on your heat pump system)
- Take a clean cloth and spray your cleaning spray of choice on it. **Tip:** If the veneer is wood or painted, use the appropriate cleaner for that material.
- Wipe the panel down with the cloth to remove dust and dirt.
- Wipe the panel dry with another clean cloth
- Wipe the rest of the unit down with the cloth to remove dust and dirt
- Wipe the rest of the unit dry with another clean cloth

Cleaning the louvers

- Turn the heat pump system off
- Gently manually rotate the louvers into the open position
- Follow the procedure for cleaning the outside of the IDU. Support the back side of the louver with your hand while wiping it down

Cleaning the Outdoor Unit

- Turn off the heat pump. Refer to the Operations section for how to turn off the heat pump.
- Using a garden hose with a sprayer nozzle, with low pressure gently spray, taking care to spray the blower fans and the heat exchanger, using a soft brush to wipe away dirt and grime. Start in a small area and ensure the fins are not being damaged in the process. Fins are extremely sharp and gloves rated for handling sharp metals should always be worn when cleaning the coils.

Removing debris from the grate of the Outdoor Unit

- Turn off the heat pump. Refer to the Operations section for how to turn off the heat pump.
- Put on a pair of work gloves
- Manually remove the debris from the grate

Cleaning the Dial

Important: Do not spray the Dial directly with water, or use cleaning solutions or polishes, as doing so may damage the product.

Follow the steps below to clean the Dial.

- Lightly dampen a soft, clean cloth with water.
- Wring out any excess water from the cloth.
- Gently wipe the display and sides of the Dial, making sure no drops of water accumulate around the product

Troubleshooting

Symptom	Checks
The Indoor Unit does not run or is not responding	If there is an indoor electrical disconnect switch, is it turned on?
	Is there a communication error between the indoor unit and outdoor unit? Please check app for errors. If so, please refer to quilt.com/support/IDU to troubleshoot errors To check that the system is running normally, change both connected indoor units (units connected to the same outdoor unit) to heating mode and change temperature setpoint to maximum. The indoor units should be blowing warm air within 5 minutes. Change both the connected indoor units to cooling minimum. The indoor unit should be blowing cold air, with high-speed airflow, within 5 minutes. If there is the communication error and there is no solution to solve, contact a Quilt-certified service professional.
	If in heating mode, is the temperature setpoint greater than 1° F above the current temperature?
	If in cooling mode, is the temperature setpoint greater than 1° F below the current temperature?
	If attempting to cool the space, is the outdoor temperature <46°F? If so, cooling mode may not be available
	If attempting to heat the space, is the outdoor temperature >84°F? If so, heating mode may not be available
	Is the Quilt Sense properly installed? Is it seated firmly, not crooked, and screwed in tightly?
	Are there any abnormal lights on the Quilt Sense indicator? If so, please refer to quilt.com/support/sense to troubleshoot errors
	Is the Quilt Sense connected to the Wifi network?
	Perform a Quilt Sense reset by holding power button on Quilt Sense for 8 seconds

	Disconnect and reconnect the Quilt Sense
Cooling/Heating is abnormal	Check that temperature setpoints are correct in the Quilt app
	Inspect indoor unit air filters, and clean if necessary (See Maintenance and Cleaning for detailed instructions)
	Remove indoor unit front cover, inspect heat exchanger for debris, and schedule cleaning if necessary
	Inspect outdoor unit and schedule cleaning if necessary
	If using the Quilt Dial, or other remote temperature sensor, as the thermostat, check the positioning of the sensor: ● Is the sensor directly in the airflow stream coming from the indoor unit? ● Is the sensor being hit by direct sunlight? ● Is the sensor on or near any other sources of heat (laptop, oven etc.) The temperature sensor may be impacted by these and other factors, and can lead to abnormal heating/cooling behavior. If possible, re-position the sensor to correct for these potential issues.
	If airflow is low in cooling mode, remove the indoor unit front cover and inspect the heat exchanger for frost-formation. If frost is found, contact a qualified professional service technician to troubleshoot further
LED strip not turning on or not responding	Is the Quilt Sense connected to WiFi? To test, try adjusting temperature from the app
	Does the LED strip change colors when toggled from the app?
	Does the LED strip change colors when toggled from the Dial? For instructions on how to change the LED color from the Dial, please refer to quilt.com/support/dial.
	Disconnect the Indoor Unit from power (See Operations section above). Check that the Quilt Sense is properly installed (See “How to install and remove the Quilt Sense module” above). Please refer to quilt.com/support/sense to troubleshoot further.
	After power cycling the unit, if the LED color cannot be changed from the app, please refer to quilt.com/support/sense to troubleshoot errors.
System is producing abnormal sounds	Do the sounds only occur in heating mode, cooling mode, or both? Please provide this information when contacting Quilt with a description of the issue
	Do the sounds only occur when transitioning between modes? The sounds may be due to the expansion/contraction of parts of the indoor unit as temperature changes. While not a functional issue, please contact a qualified professional service technician if the noises are particularly loud, persistent, or concerning
	Do the sounds only occur when the louvers (air guide vanes) are moving? The sounds may be due to improperly-mounted louver motors or louver supports. Contact a qualified professional service technician for inspection of these components
	Do the sounds only occur when the fan is running? The sounds may be due to a poorly balanced fan, improperly-mounted fan, or debris caught in the fan. Contact a qualified professional service technician for inspection of these components
	Check that the indoor unit front cover is properly attached

	Check that the indoor unit filters are properly seated. Check that the filters are clean and not filled with debris (See Maintenance and Cleaning section for instructions to clean the filters)
	Check that the indoor unit is hanging securely on the wall mount bracket. Contact a qualified professional service technician if the mounting does not seem secure or properly seated
Outdoor unit is not running properly	Is there a communication error between the indoor unit and outdoor unit? Please check app for errors. If so, please refer to quilt.com/support/IDU to troubleshoot errors
	Is the outdoor unit fan spinning and blowing air? To check that the outdoor unit is operating: In heating mode, set the temperature setpoint to maximum. The outdoor unit and compressor should be operating within 5 minutes. Check for slight cool air or low humming noise. In cooling mode, set the temperature setpoint to minimum. The outdoor unit and compressor should be operating within 5 minutes. Check for slight warm air or low humming noise. If the Outdoor Unit does not make the low humming noise, contact a qualified service technician.
	Are there any loud grinding or metallic sounds coming from the outdoor unit? If so, please contact a Quilt-certified service professional.
Dial is offline or unresponsive	The Dial receives regular software updates over the air. To view the latest troubleshooting instructions go to quilt.com/support/dial
	Unplug Dial from power source, wait 30 seconds, and plug Dial back into power source
	Perform factory reset on Dial: 1. If in the tabletop configuration, turn the Dial over and remove the rubber foot by prying it off 2. Or, if in the wall-mounted configuration, remove the Dial from the wall mount by pulling it off at a 15 degree angle (slightly up, but mostly perpendicular to the wall). Do not attempt to pry the Dial off the wall mount by tilting. 3. Maintain power connection to the Dial; do not disconnect the power 4. Press and hold the reset button for >3s using a small tool 5. The Dial should reset back to factory default 6. Reinstall the Dial

Notes:

- If the air conditioner still runs abnormally after the checklist above, please contact a qualified professional service technician for professional repair.

Specifications

- Our device can communicate over wifi at 2.4GHz or 5 GHz (802.11 a/b/g/n/ac/ax), bluetooth 5.2 and thread.

- This device has been designed to meet UL (USA) & CSA (Canada) safety requirements
- Quilt's heat pump system meets Energy Star energy efficiency requirements including Energy Star Cold Climate and Energy Star Most Efficient 2024

- Quilt's heat pump system is an AHRI Certified ® product that meets the AHRI 210/240 standard for Heat Pumps

- Dimensions:
    - Indoor Unit: 37.8" x 7.8" x 8"

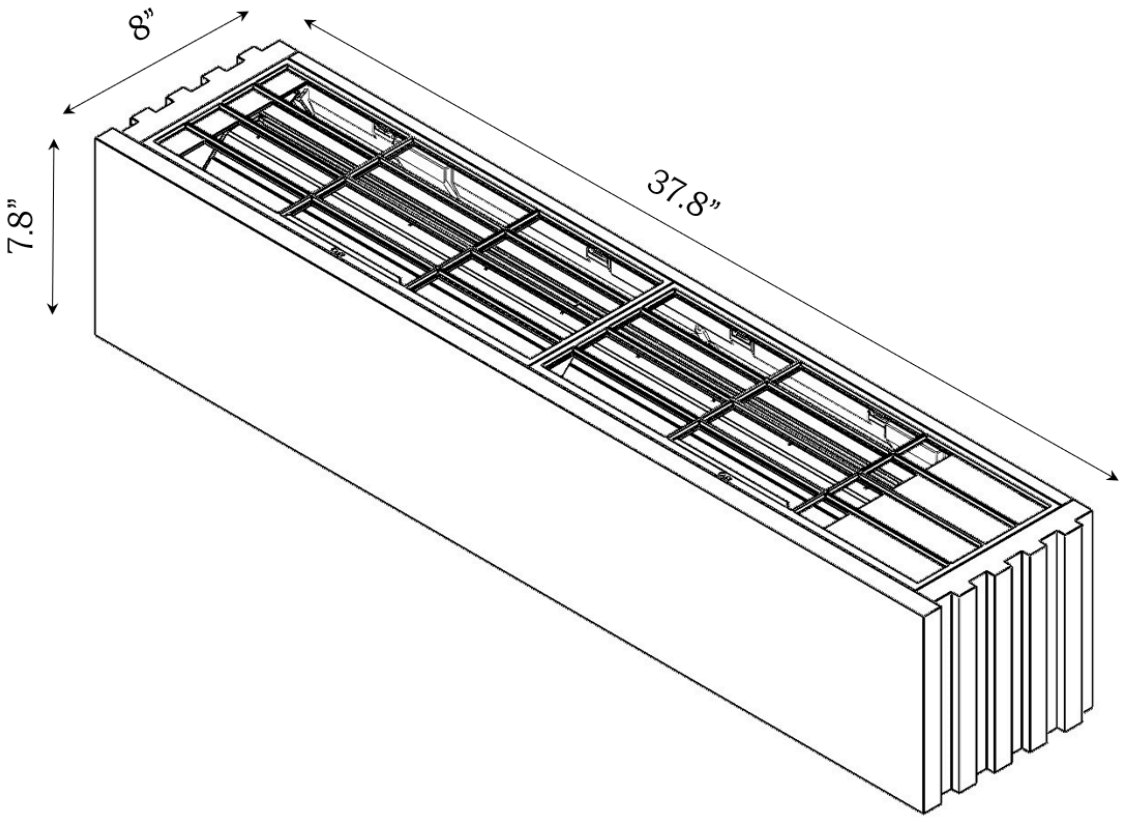

- Outdoor Unit: 37.8” x 27.6” x 15.6”

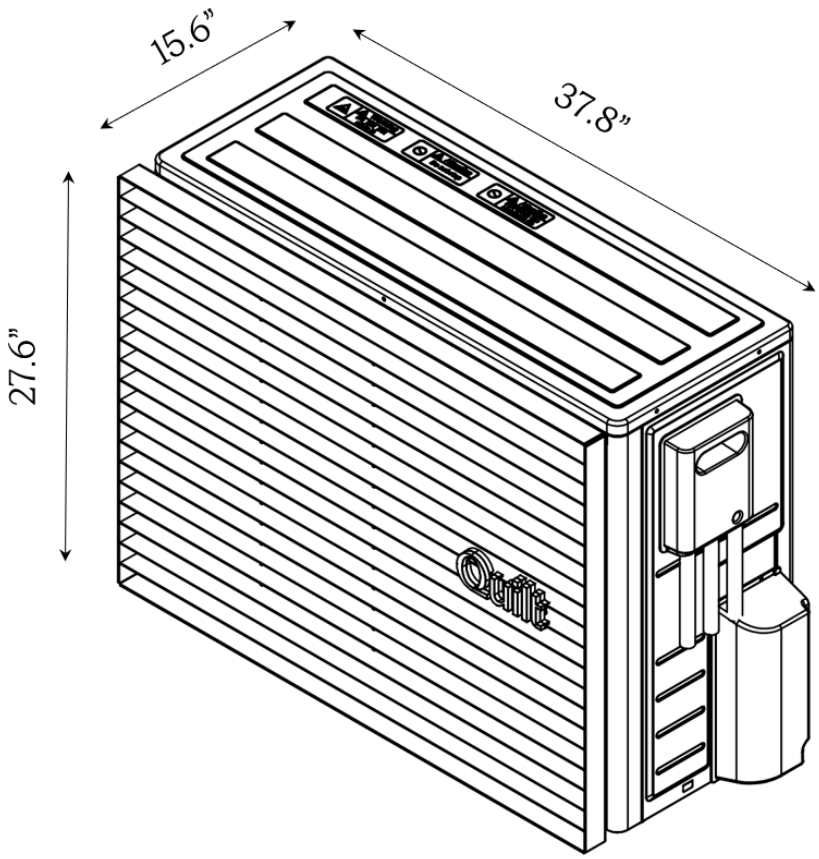

- Dial:

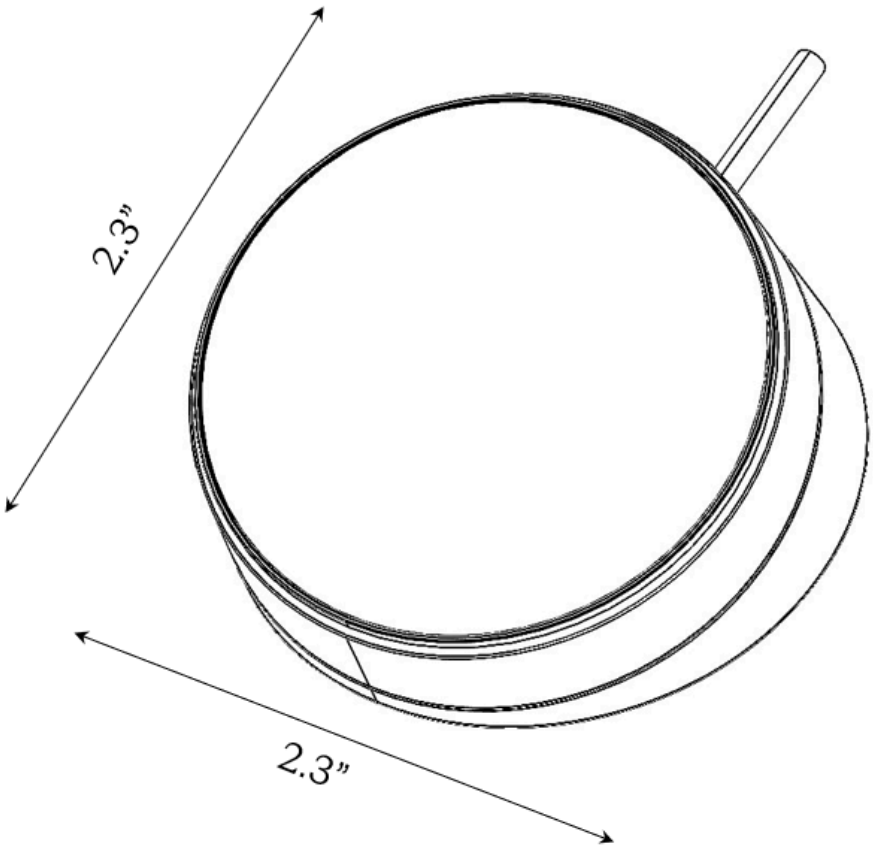

Heat Pump Specifications (Model QIO1-M2Z18)

Property	Indoor Unit	Outdoor Unit
Mass	11 kg	50 kg
Capacity - Heating @ 47 F	9,000 BTU/hr	18,000 BTU/hr
Capacity - Heating @ 5 F		
Capacity - Heating @ -13 F		
Capacity - Cooling	8,000 BTU/hr	16,000 BTU/hr
Input Voltage	208-240 VAC	208-240 VAC
Input Current	3 A	15 A
Circuit Breaker Size	N/A - Powered from ODU	20 A

Operating Temperature	32 to 104˚F (0 to 40˚C)	-15 to 128˚F (-26 to 53˚C)
Operating Altitude	Up to 6500 ft (2000 m)	Up to 6500 ft (2000 m)
Sound Pressure Level	27 dBA - 44 dBA	36 dBA - 55 dBA

Dial & Sense Module Specifications

Property	Dial (Model QD1)	Sense Module (Model QS1)
Input Voltage	5-12 VDC	12 VDC
Included Sensors	Temperature, Accelerometer, Ambient Light, Presence	Temperature, Accelerometer, Ambient Light, Presence, IR Receiver
Operating Value (Minimum Temp Step Change)	1.0 ˚F (0.5 ˚C)	1.0 ˚F (0.5 ˚C)
Display	AMOLED	N/A
Rated Impulse Voltage	500 V	500 V

Compliance

California Proposition 65 Warning

⚠ WARNING: This product can expose you to chemicals including styrene, which is known to the State of California to cause cancer. For more information, go to www.P65Warnings.ca.gov.

FCC Compliance Statement

FCC-ID (Dial): 2BFSB-DG100
FCC-ID (Sense): 2BFSB-SG100
Contains FCC-ID (Dial & Sense): XPYMAYAW2B

Quilt Systems Inc.
1800 Broadway, Suite 2
Redwood City, CA 94063 USA
Declare under our sole responsibility that the product

Quilt's heat pump system complies with part 15 of the FCC Rules. Operation is subject to the following two conditions: (1) this device may not cause harmful interference. and (2) this device must accept any interference received, including interference that may cause

undesired operation. Changes or modifications not expressly approved by the party responsible for compliance could void the user‘s authority to operate the equipment.

This equipment has been tested and found to comply with the limits for a Class B digital device pursuant to Part 15 of the FCC rules. These limits are designed to provide reasonable protection against harmful interference when the equipment is operated in a residential environment. This equipment generates, uses, and can radiate radio frequency energy and, if not installed and used in accordance with the instruction manual, may cause harmful interference to radio communications.

However, there is no guarantee that interference will not occur in a particular installation. If this equipment does cause harmful interference to radio or television reception, which can be determined by turning the equipment off and on, the user is encouraged to try to correct the interference by one or more of the following measures:

- Reorient or relocate the receiving antenna.
- Increase the separation between the equipment and receiver.
- Connect the equipment into an outlet on a circuit different from that to which the receiver is connected.
- Consult Quilt or an experienced radio/TV technician for help.

ISED Compliance Statement

This device meets the IC requirements for RF exposure in public or uncontrolled environments.

Cet appareil est conforme aux conditions de la IC en matière de RF dans des environnements publics ou incontrôlée.

~~This device complies with Industry Canada license exempt RSS standard(s).~~

~~Cet appareil est conforme avec Industrie Canada RSS standard exempts de licence(s).~~

Operation is subject to the following two conditions: this device may not cause interference, and this device must accept any interference, including interference that may cause undesired operation of the device.

Son utilisation est soumise à Les deux conditions suivantes: cet appareil ne peut pas provoquer d’interférences et cet appareil doit accepter Toute interférence, y compris les interférences qui peuvent causer un mauvais fonctionnement du dispositif.

CAN ICES-3 (B)/NMB-3(B)

This Class B digital device complies with Canadian ICES-003.
Cet appareil numérique de la classe B est conforme à la norme NMB-003 du Canada.

RF Exposure Statement

This product meets international guidelines for exposure to radio waves

This device contains a radio transmitter and receiver. It is designed not to exceed the limits for exposure to radio frequency energy. These limits are set by public authorities such as the Federal Communications Commission (FCC), or by the Innovation, Science and Economic Development Canada (ISED) and include safety margins designed to assure the protection of all persons, regardless of age and health.

Quilt's heat pump system has been tested and meets applicable limits for radio frequency (RF) exposure. This equipment should be installed and operated with a minimum distance of 20 cm between the radiator and your body.

Accessing the Compliance Information on the Quilt Dial

Since the Quilt Dial has a screen, you may access the compliance information via the menu system. The steps are as follows:

1) Swipe up from the Main Room menu to get to the Dial Info screen
2) Tap on the "Legal and Regulatory" linked label
3) Swipe down to see all of the regulatory text including the FCC ID and FCC warning statement

Warranty Statement

If you change or modify the equipment it may void your product warranty.