USER MANUAL
Ein bedienungsanleitung
MANUAL de usuario
Manuel de l’ utilisateur
Manuale utente

Model number / Modell / El modelo / Les modèles / modelli

F005

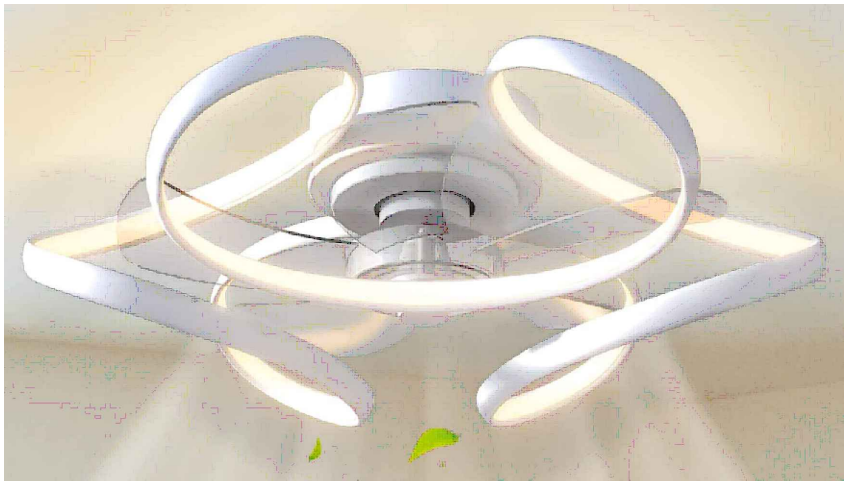

Important: Read carefully and keep.
Tipp: beglaubigt das lesen und speichern
Consejo: certificado para leerlo y guardarlo
Astuce: authentifier pour le lire et le sauvegarder
Nota: certificazione leggere e conservare

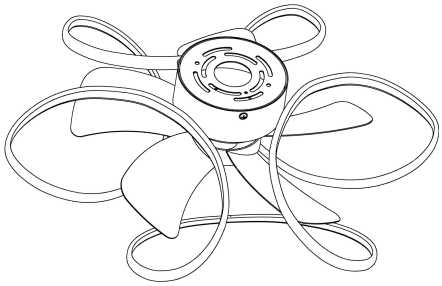

A

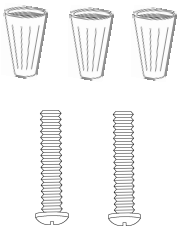

B

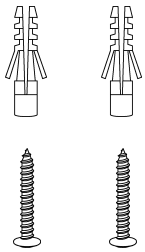

C

D

①

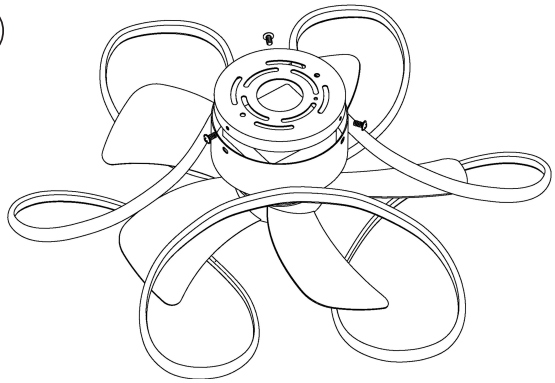

②

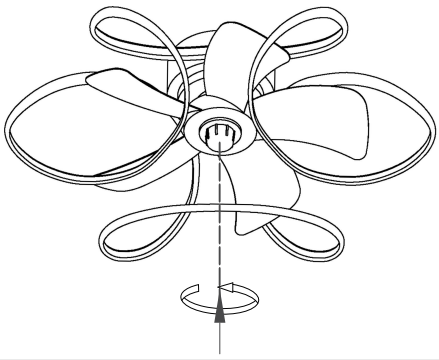

(fig.3)

③

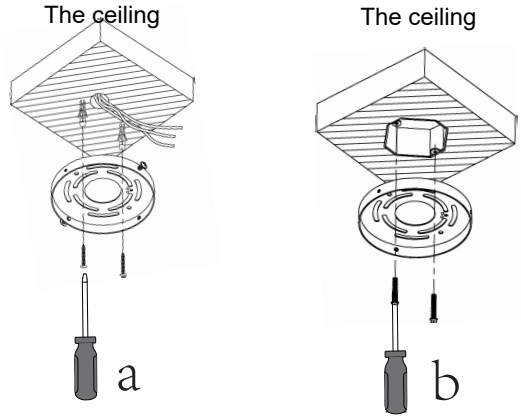

④

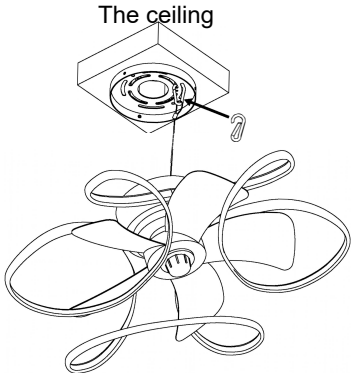

⑤

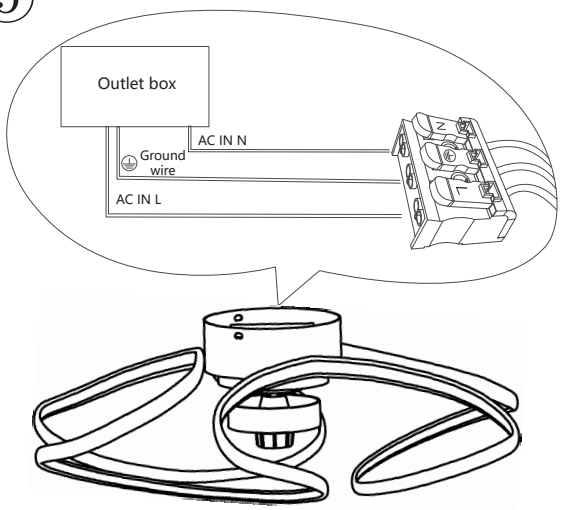

⑥

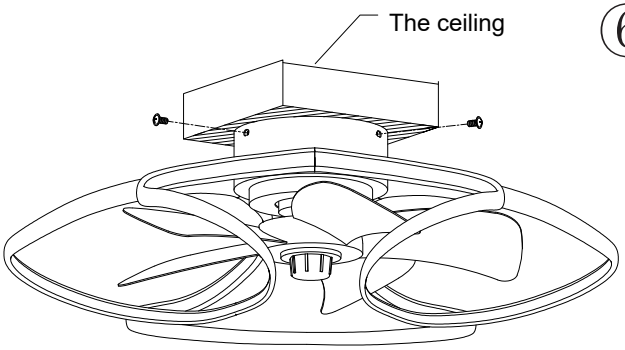

⑦

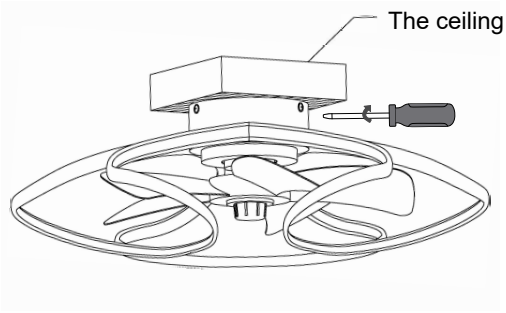

English

Preparations:

1.Prepare the required tools.
2.Turn off the switch.
3.Put all the parts in order.

Installation procedure:

1.Remove the bracket from the light fixture.
2.Tighten the part in a counterclockwise direction to make it firm.
3.For customers in Europe and the UK, please follow picture A to install the bracket and make sure the bracket is securely secured. For customers in the U.S. and Canada, follow Figure B to mount the bracket. Make sure the bracket is securely secured.
4.Hook the hook to the bracket like in the picture.
5.Insert the ground wire into the middle position ; Insert the N pole of the wire into the N position ; Insert the L pole of the wire into the L position .
6.Align the holes in the lamp and bracket, and then twist the screws.
7.Tighten the 4 screws to ensure firm installation.
8.Clean the fan light with a clean cloth.
9.Turn on the switch. Successfully install the fan light! ! !

Remote control description:

1.Install AAA batteries (batteries not included). If the remote control is not used for a long time, remove the battery to prevent damage to the battery.
2.The remote control function is shown below.

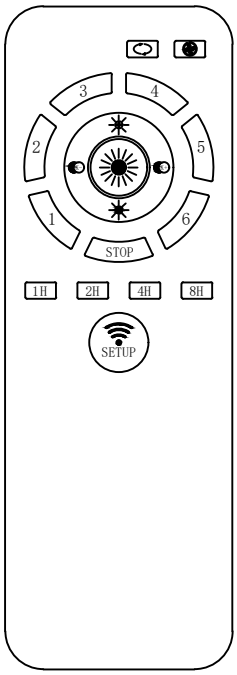

Link fan light (Normally, the remote control and fan light are already linked and can be used directly . If there is no link, follow the steps . 1.Turn off the main power supply to the fan light . 2.Turn on the main power of the fan light and press and hold this button within 5 seconds . 3.If you hear a beep, the remote is connected to the fan light . Try using a remote control to control the fan light .)

Turn on the light / Turn off the light

Turn up the lights/dim the lights

Turn down / turn up the color temperature of light

Different fan speeds
1 gear has the least wind , 6 gear has the most wind.

Turn off the fan

Positive fan rotation / Fan reversal

Timer button, 1 hour / 2 hours / 4 hours / 8 hours

Turn off lights and fans together

Mobile APP control instructions:

1.Scan the QR code and install the APP. Select the desired language in the app. The APP comes with operating instructions. Read carefully and you can use it.

FCC Statement：

English

Warning:

Changes or modifications to this unit not expressly approved by the party responsible for compliance could void the user ' s authority to operate the equipment.

NOTE:

This device complies with part 15 of the FCC Rules. Operation is subject to the following two conditions: (1) This device may not cause harmful interference, and (2) this device must accept any interference received, including interference that may cause undesired operation.

FCC Statement:

This equipment has been tested and found to comply with the limits for a Class B digital device, pursuant to part 15 of the FCC Rules. These limits are designed to provide reasonable protection against harmful interference in a residential installation. This equipment generates, uses and can radiate radio frequency energy and, if not installed and used in accordance with the instructions, may cause harmful interference to radio communications. However, there is no guarantee that interference will not occur in a particular installation. If this equipment does cause harmful interference to radio or television reception, which can be determined by turning the equipment off and on, the user is encouraged to try to correct the interference by one or more of the following measures:

—Reorient or relocate the receiving antenna.

—Increase the separation between the equipment and receiver.

—Connect the equipment into an outlet on a circuit different from that to which the receiver is connected.

—Consult the dealer or an experienced radio/TV technician for help.

The equipment complies with FCC Radiation exposure limit set forth for uncontrolled environment. This equipment should be installed and operated with minimum distance 20cm between the radiator and your body.