SMD CERAMIC ANTENNA
Data Sheet

TS3216E245D05

For 2400-2484MHz

3.2x1.6mm [EIA1206]

Manufacturer:TSUN TECHNOLOGY CO., LTD

Manufacturer Address: No.No.1, Lane 173, Chung Ching St, San Ming Dist, Kaohsiung,,1, Lane 173, Chung Ching St, San Ming Dist, Kaohsiung,,

FEATURES

- Light weight,compact
- Wide bandwidth,lowcost
- Built-in antenna with high gain

APPLICATIONS

- Bluetooth
- IEEE802.11g/b
- Zigbee systems,etc...

TS3216E245D05

SHAPES AND DIMENSIONS Dimensions in mm

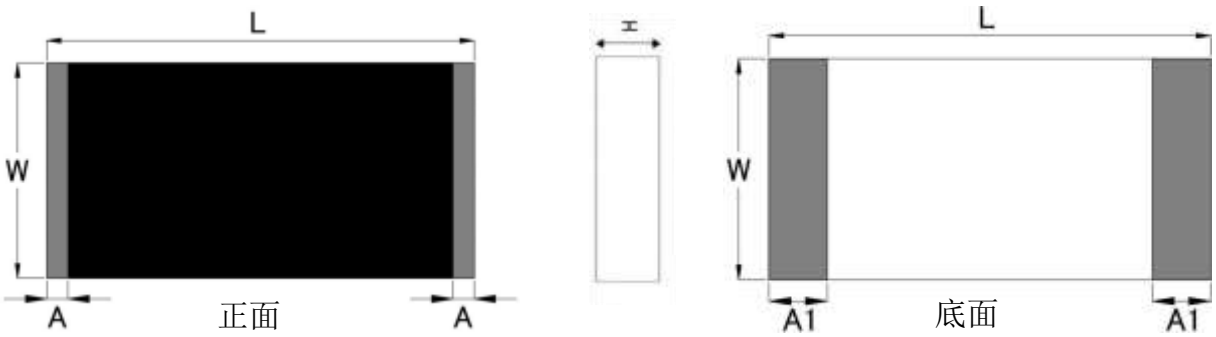

L	W	A	A1	H
3.2 ± 0.1	1.6 ± 0.1	0.15±0.05	0.4±0.15	0.55±0.1

✷切記： SMT貼片需黑色面朝上

Electrical Characteristics per line(TA=25℃)

Parameter	Specification	Units
Frequency Band	2400~2483	MHz
Polarization	Linear	
Peak Gain	2.71	dBi
Peak Efficiency	68.8%	%
Impendance	50	Ω

PART NUMBERING SYSTEM

TS - 3216 - E - 2450 - D - 05

Brand Dimension Material **Frequency** **Feeding mode** **Type**

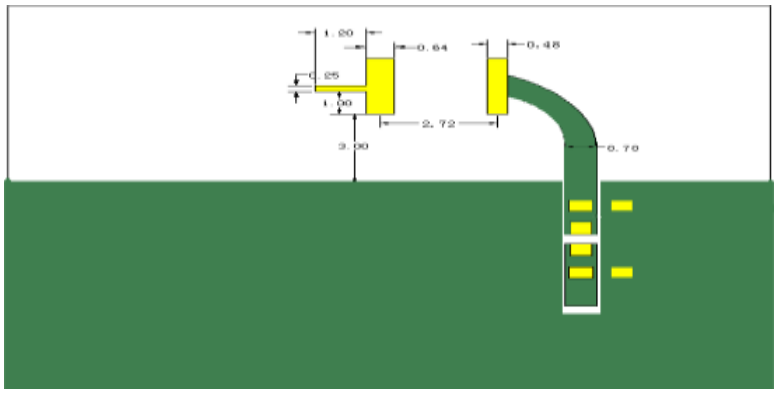

Typical Characteristics

Fig.1 VSWR

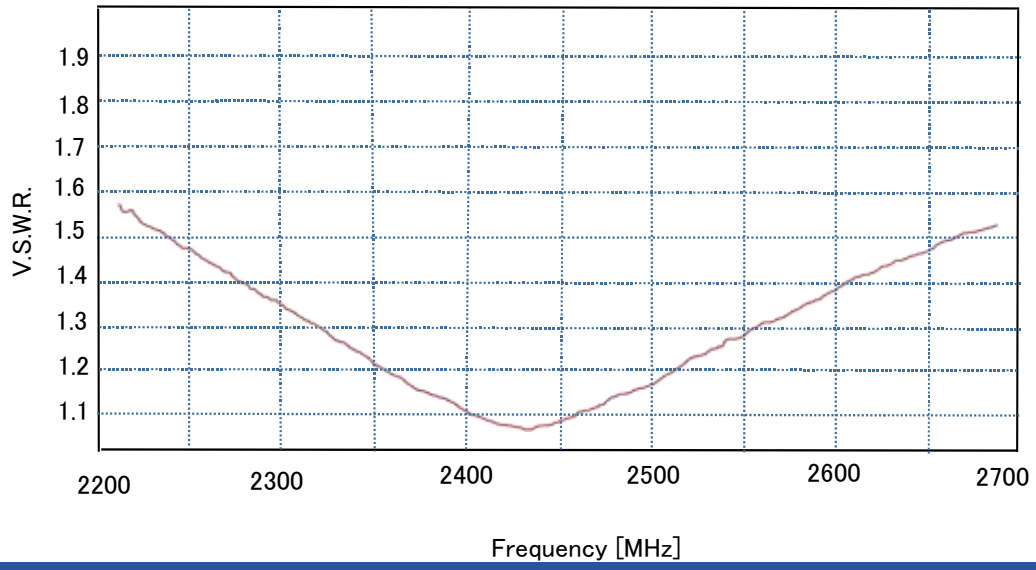

Radiation Pattern

The Gain pattern is measured in FAR-field chamber. DUT is placed on the table of rotator , a standard horn antenna and Vector Network Analyzer is used to collect data.

Fig.2 FAR-field Chamber

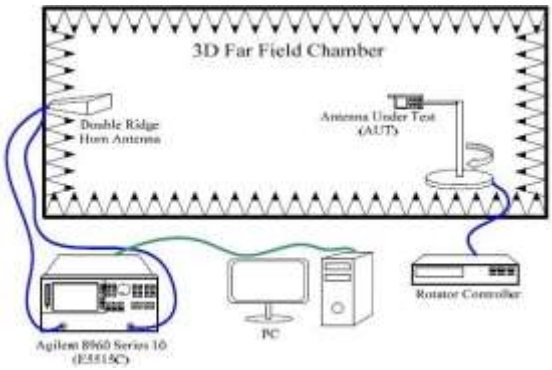

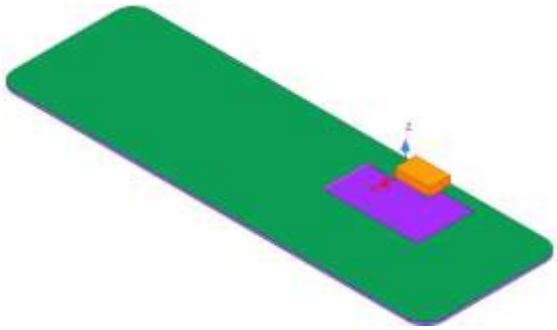

3D Gain Pattern (2400 MHz)

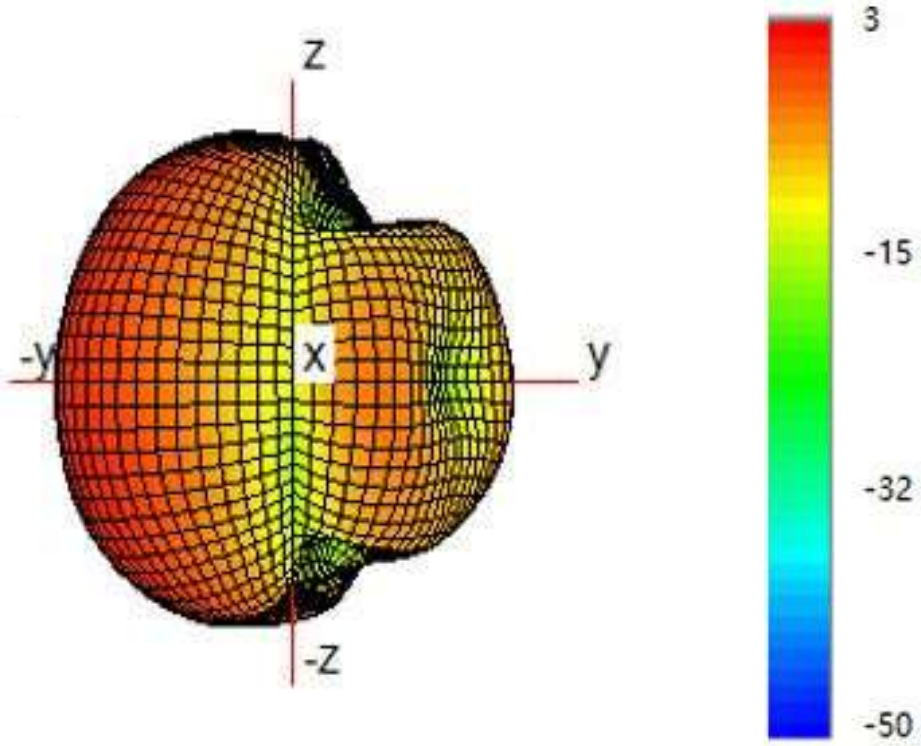

3D Gain Pattern (2450 MHz)

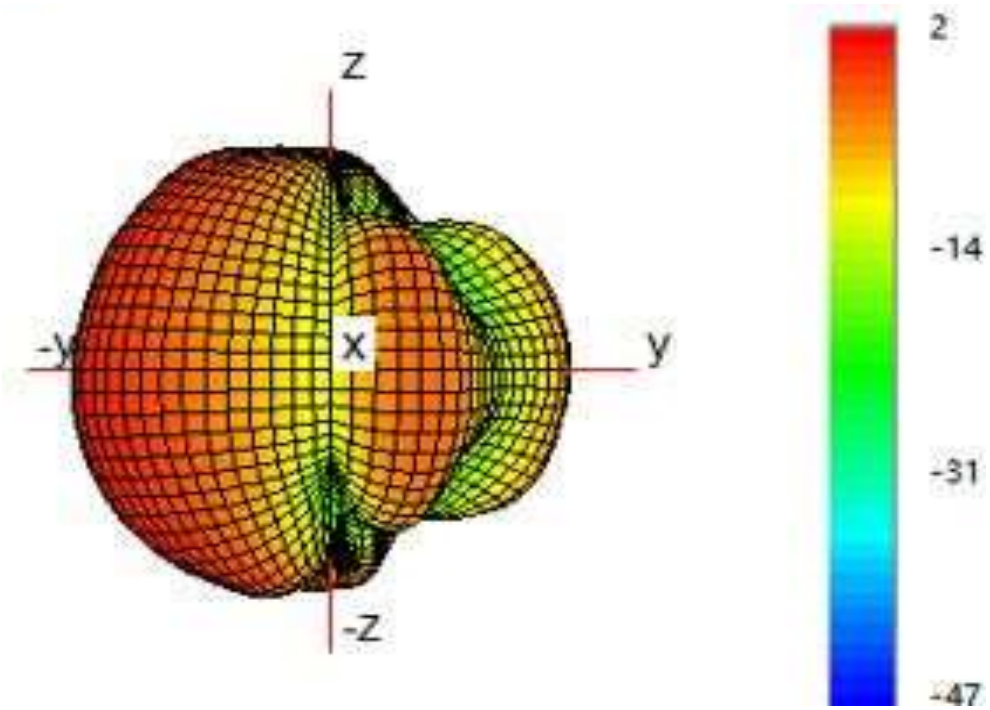

3D Gain Pattern (2500 MHz)

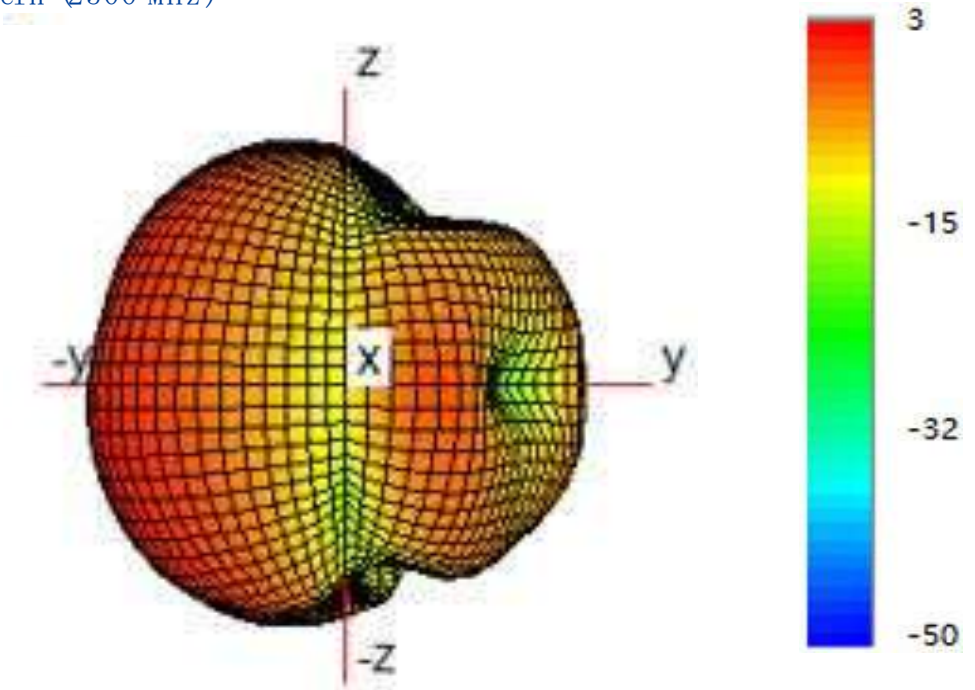

Gain（dB）

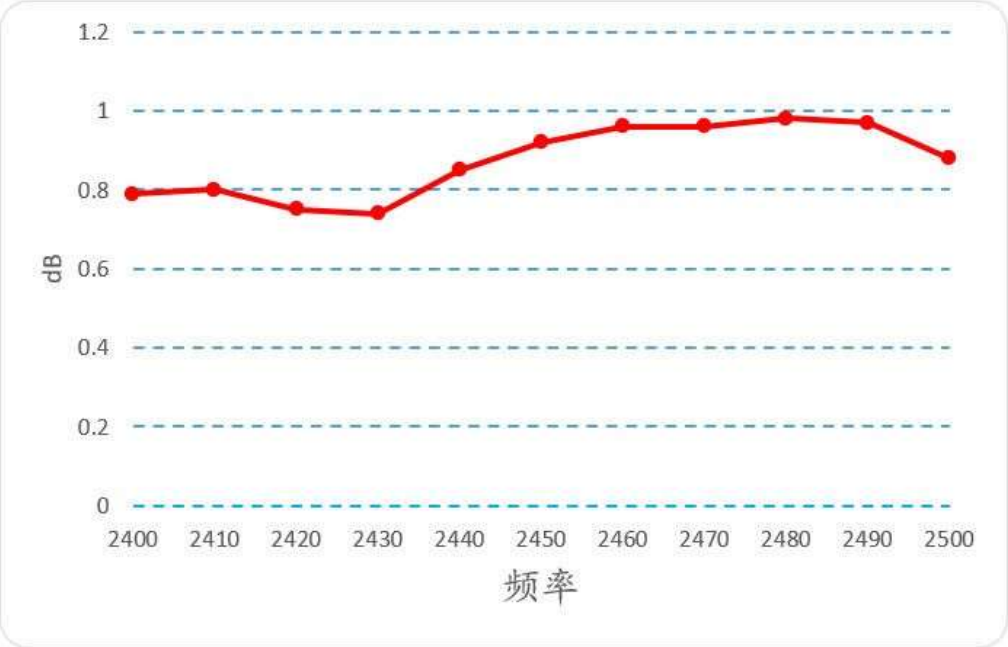

Eiciency（%）

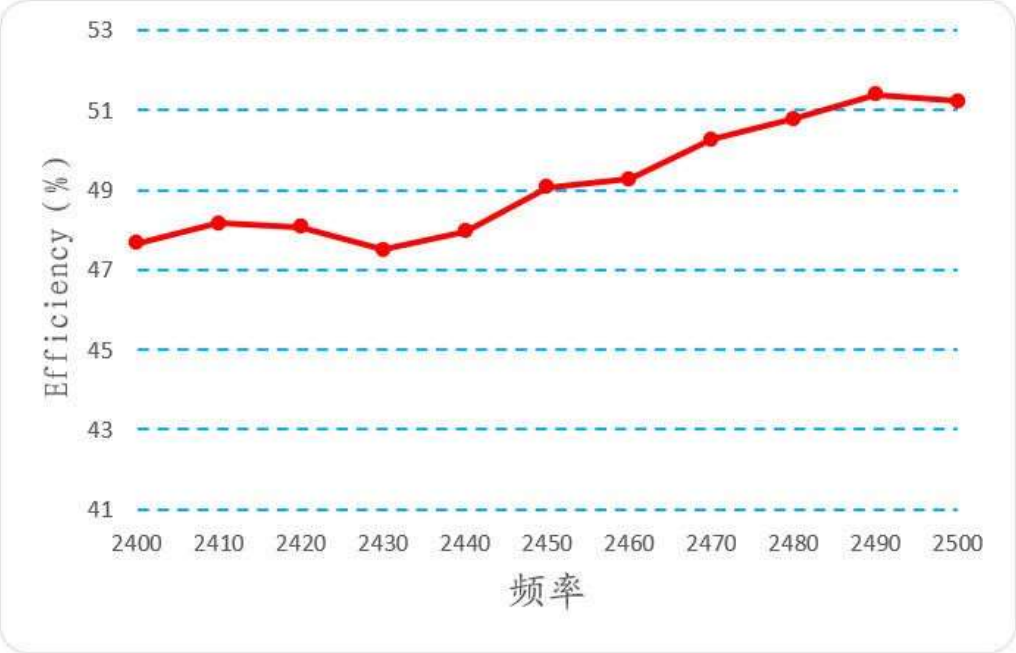

Item	Condition	Specification
Thermal shock	1. 30±3 minutes at -40°C±5°C, 2. Convert to +105°C (5 minutes) 3. 30±3 minutes at +105°C±5°C, 4. Convert to -40°C (5 minutes) 5. Total 100 continuous cycles	No apparent damage Fulfill the electrical spec. after test.
Humidity resistance	1. Humidity: 85% R.H. 2. Temperature: 85±5°C 3. Time: 1000 hours.	No apparent damage Fulfill the electrical spec. after test.
High temperature resistance	No apparent damage Fulfill the electrical spec. after test.	1. Temperature: 150°C±5°C 2. Time: 1000 hours.
Low temperature resistance	1. Temperature: -40°C±5°C 2. Time: 1000 hours.	No apparent damage Fulfill the electrical spec. after test.
Soldering heat resistance	1. Solder bath temperature : 260±5℃ 2. Bathing time: 10±1 seconds	No apparent damage
Solderability	The dipped surface of the terminal shall be at least 95% covered with solder after dipped in solder bath of 245±5℃ for 3±1 seconds.	No apparent damage

(2)) Storage Condition

(a) At warehouse: The temperature should be within 0 ~ 30℃ and humidity should be less than 60% RH.The product should be used within 1 year from the time of elivery.

(b) On board: The temperature should be within -40~85℃ and humidity should be less than 85% RH.

(3) Operating Temperature Range

Operating temperature range : -40℃ to +85℃.

Recommended Reflow Solder curve

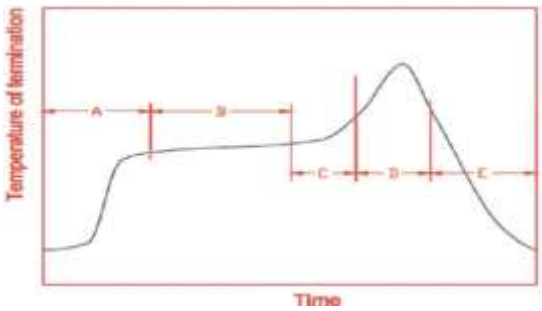

A	1st rising temperature	The normal to Preheating temperature	30s to 60s
B	Preheating	140℃ to 160℃	60s to 120s
C	2nd rising temperature	Preheating to 200℃	20s to 40s
D	Main heating	if 220℃	50s~60s
		if 230℃	40s~50s
		if 240℃	30s~40s
		if 250℃	20s~40s
		if 260℃	20s~40s
E	Regular cooling	200℃ to 100℃	1℃/s ~ 4℃/s

*reference: J-STD-020C

(1)) Soldering Gun Procedure

Note the follows, in case of using solder gun for replacement.

(a) The tip temperature must be less than 350°C for the period within 3 seconds by using soldering gun under 30 W.

(b) The soldering gun tip shall not touch this product directly.

(2) Soldering Volume

Note that excess of soldering volume will easily get crack the body of this product.

■PACKAGING STYLE

□REEL DIMENSIONS

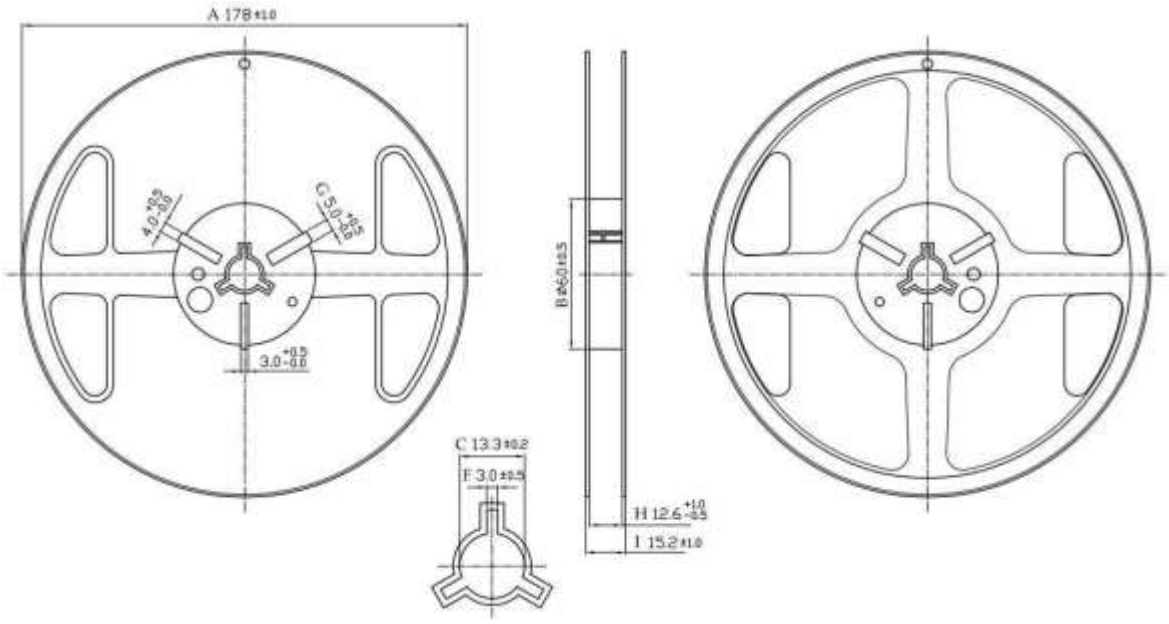

□TAPE DIMENSIONS

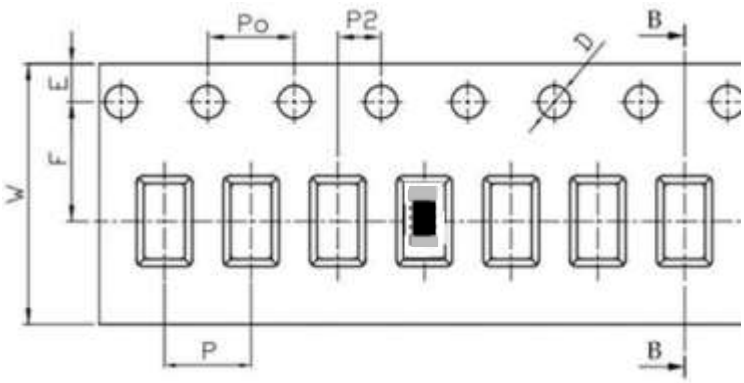

Feature	Specifications	Tolerances
W	8 .00	±0.30
P	4.00	±0.10
E	1.75	±0.10
F	3.50	±0.10
P2	2.00	±0.10
D	1.50	+0.10 -0.00
Po	4.00	±0.10
10Po	40.00	±0.20

Typing Quantity: 5000 pieces per 7” reel

Order Information

Device	Package	Net Weight	Carrier	Quantity	HSF Status
TS3216E245D05	3216	0.0089g	Tape&Reel	5000pcs	RoHS compliant

Revision history

Date	Revision	Description of changes
2018-11-5	1.0	First Version
2022-12-9	1.1	Update the package information

The contents of this data sheet are subject to change without notice.
Please confirm the specifications and delivery conditions when placing your order.

© Copyright 2015， All rights reserved