ANT

SPECIFICATIONS

客户:

CUSTOMER: _____

产品名称:

DESCRIPTION: 蓝牙天线Bluetooth ANT

客户型号:

CUSTOMER PART No: _____

产品型号:

OUR MODEL NO: **PBX3216MC02**

日期:

DATE: 2020/12/22

确认签字,盖章后请返回承认书一份

PLEASE RETURN TO US ONE COPY OF "SPECIFICATION FOR APPROVAL"

WITH YOUR APPROVED SIGNATURES

UNLESS OTHER SPECIFIED TOLERANCES ON: X=± X.X=± X.XX= ANGLES =± HOLEDIA =±		深圳市朋伴兴业科技有限公司 Shenzhen Pengbian Industrial Technology Co., LTD
SCALE: N/A	UNIT: mm	THESE DRAWINGS AND SPECIFICATIONS ARE THE PROPERTY OF PBXY TECHNOLOGY Limited AND SHALL NOT BE REPRODUCED OR USED AS THE BASIS FOR THE MANUFACTURE OR SALE OF APPARATUS OR DEVICES WITHOUT PERMISSION
DRAWN BY : Sera	CHECKED BY: XD	
DESIGNED BY: Sera	APPROVED BY: XD	
TITLE: CHIP2450-3216 Specification	DOCUMENT NO. 3216	SPEC REV. P1

PBX3216MC02 Specification

Operating Temp. : -40℃~+85℃

1. FEATURES:

- Light weight, compact
- Wide bandwidth, low cost
- Built-in antenna with high gain

2. APPLICATIONS:

- Bluetooth, Wireless LAN, Mobile TV
- Home RF System, etc

3. PRODUCT IDENTIFICATION

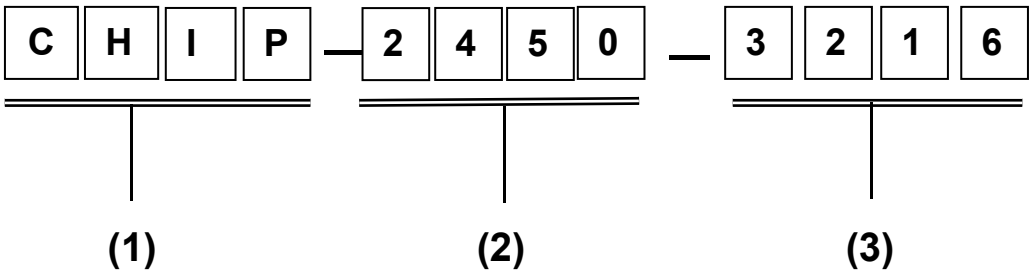

(1) Product type: Multilayer chip Antenna
(2) Center Frequency: 2450MHz
(3) External Dimensions (L×W) (mm): 3.2*1.6

4. SHAPE AND DIMENSIONS:

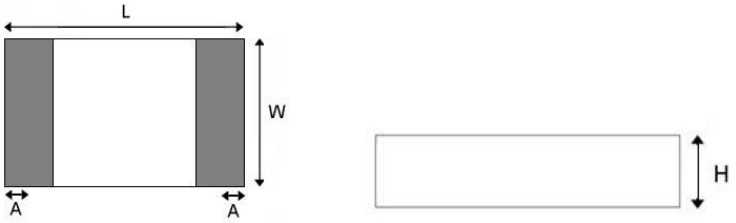

L	W	H	A
3.2±0.2	1.6±0.2	0.52±0.1	0.4±0.1

测试板参考尺寸：Test board reference size:

单位：mm　　Unit:mm

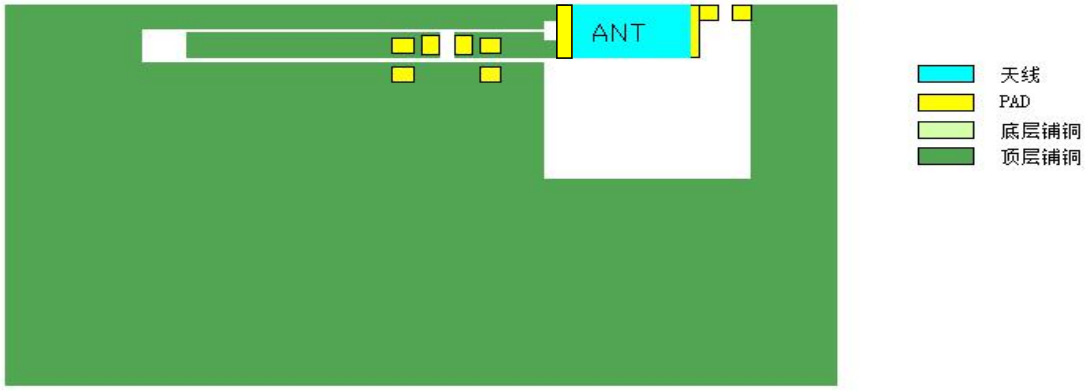

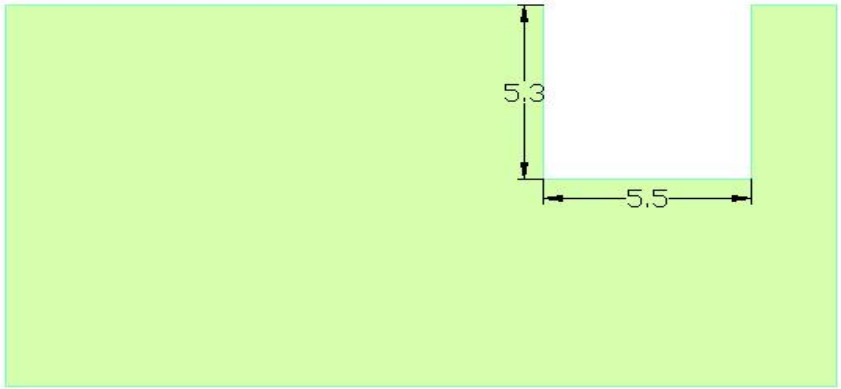

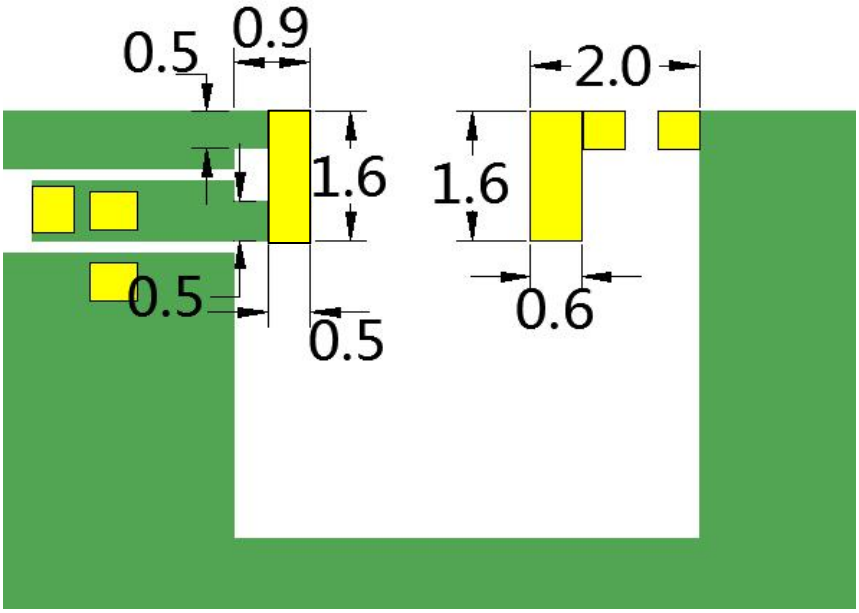

UNLESS OTHER SPECIFIED TOLERANCES ON: X=±　X.X=±　X.XX= ANGLES =±　HOLEDIA =±		深圳市朋伴兴业科技有限公司 Shenzhen Pengbian Industrial Technology Co., LTD	
SCALE：N/A	UNIT：mm	THESE DRAWINGS AND SPECIFICATIONS ARE THE PROPERTY OF PBXY TECHNOLOGY Limited AND SHALL NOT BE REPRODUCED OR USED AS THE BASIS FOR THE MANUFACTURE OR SALE OF APPARATUS OR DEVICES WITHOUT PERMISSION	
DRAWN BY : Sera	CHECKED BY: XD		
DESIGNED BY: Sera	APPROVED BY: XD		
TITLE：CHIP2450-3216 Specification		DOCUMENT NO.	3216	SPEC REV. P1

打孔参考示意图Punching reference diagram

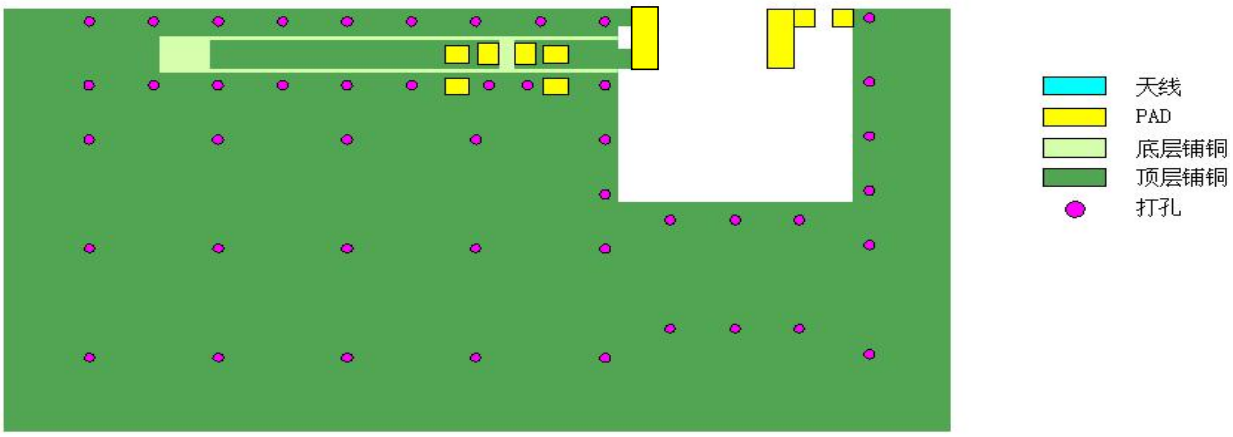

APPLICATION GUIDE

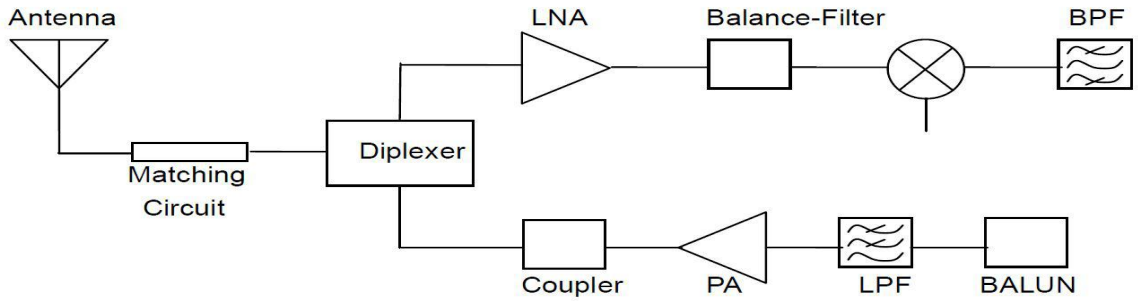

5. SPECIFICATIONS:

Test item	specification
bandwidth	2400~2483MHz
Polarization mode	Linear polarization
* Maximum gain	2.67 dbi
* Efficiency	72.30%
Input impedance	50Ω

* Test condition: Test board size 90*40 mm

Matching circuit: Pi matching circuit will be required

6. Electrical Characteristics :

回波损耗RL (return loss)

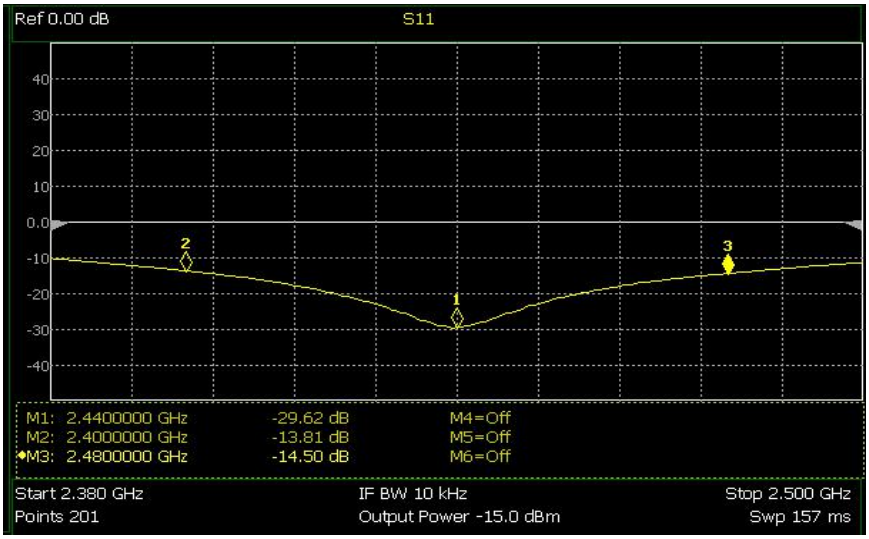

驻波比standing-wave ratio (SWR)

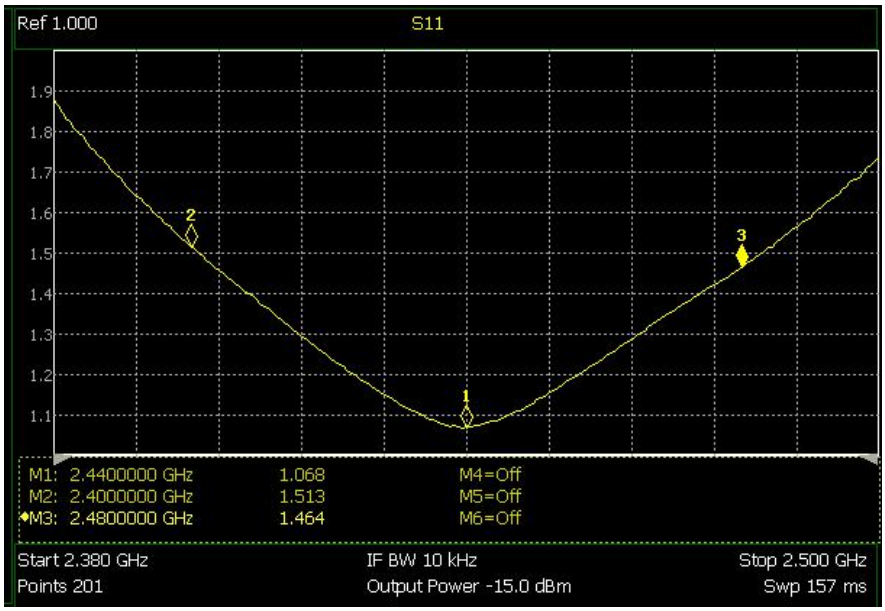

Mark	Frequency	VSWR
1	2400 MHz	1.513
2	2440 MHz	1.068
3	2480 MHz	1.464

THESE DRAWINGS AND SPECIFICATIONS ARE THE PROPERTY OF PBXY TECHNOLOGY Limited AND SHALL NOT BE REPRODUCED OR USED AS THE BASIS FOR THE MANUFACTURE OR SALE OF APPARATUS OR DEVICES WITHOUT PERMISSION

Radiation Pattern

The Gain pattern is measured in FAR-field chamber. DUT is placed on the table of rotator,a standard horn antenna and Vector Network Analyzer is used to collect data.

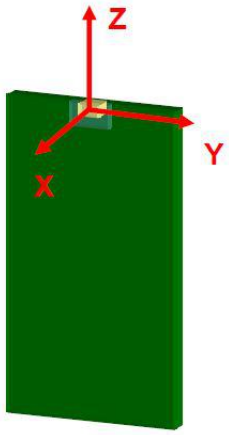

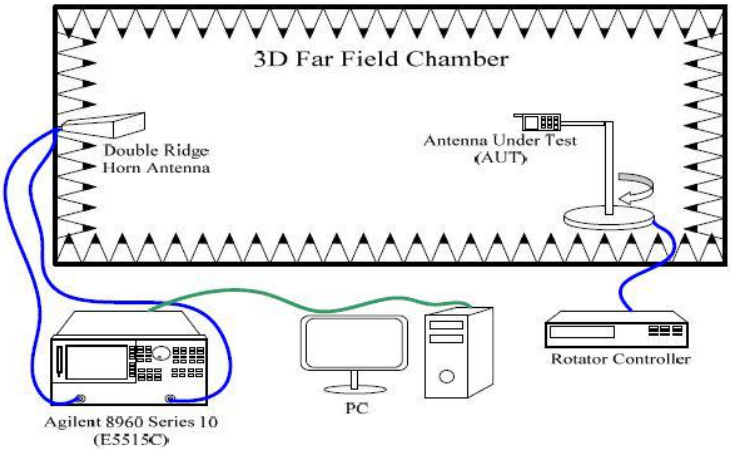

◎ 效率efficiency

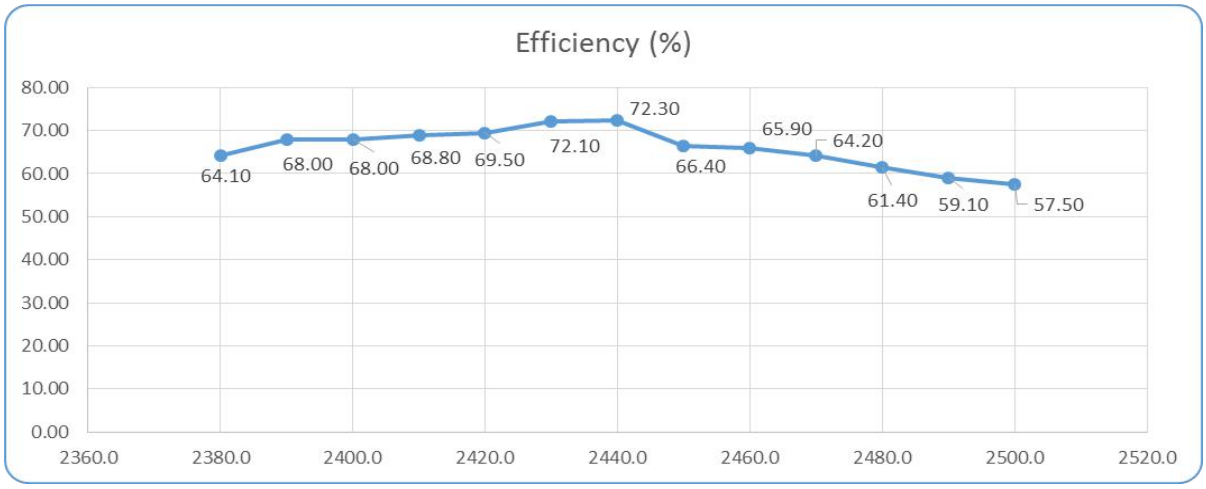

最大增益maximum gain

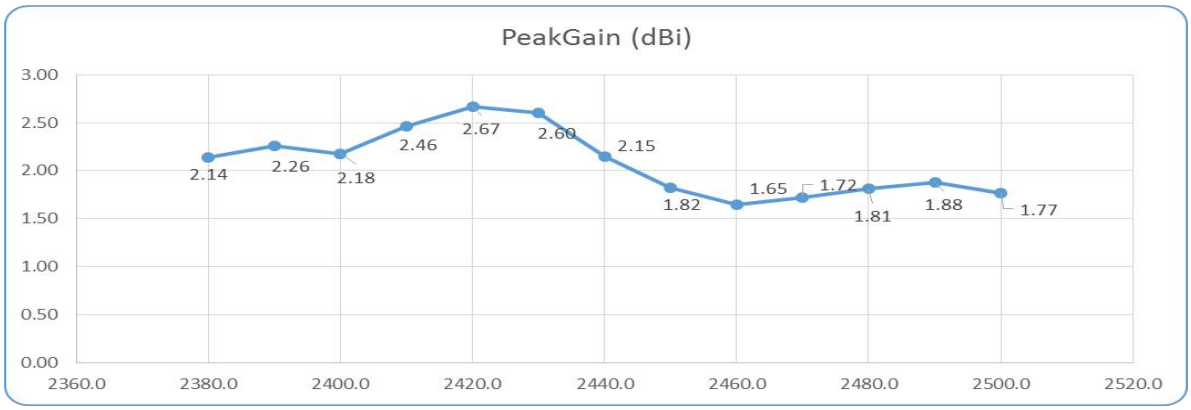

◎ 3D Gain Pattern (2400 MHz)

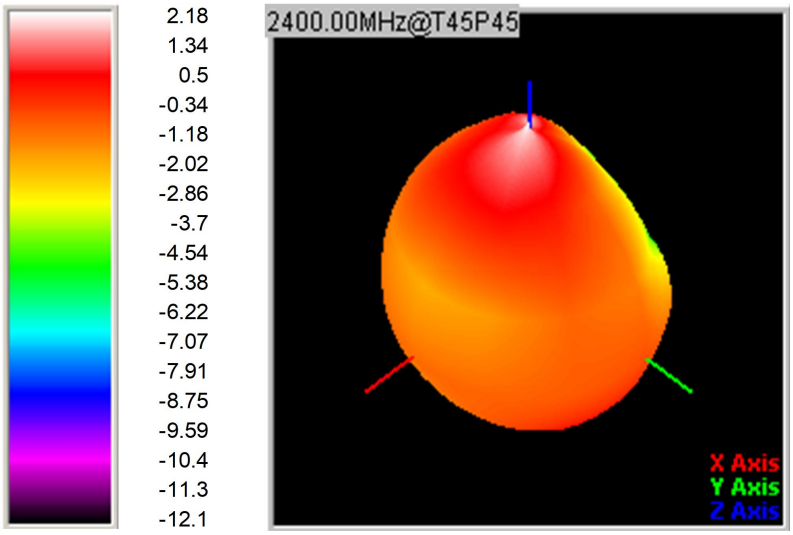

◎ 3D Gain Pattern (2440 MHz)

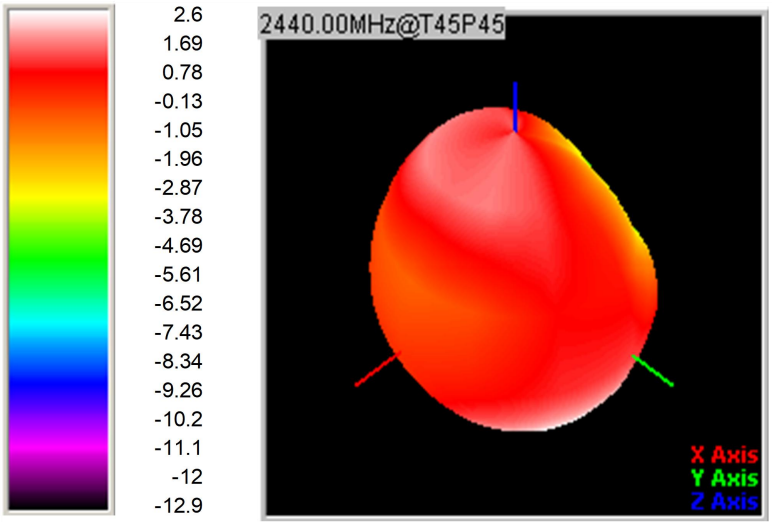

◎ 3D Gain Pattern (2480 MHz)

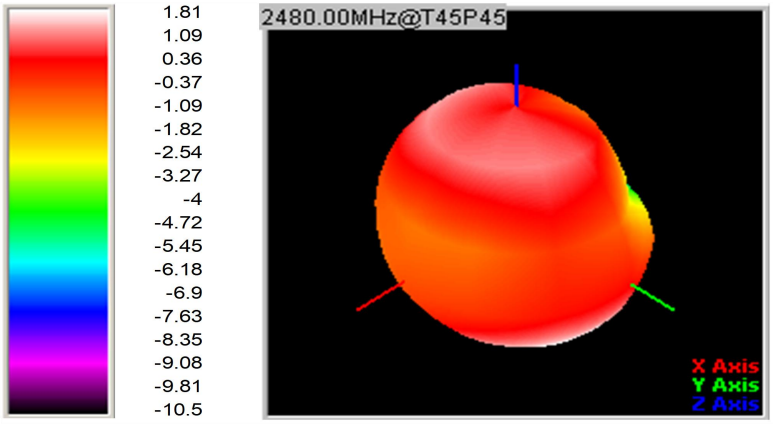

7. Environmental Characteristics

(1) Reliability Test

Item	Condition	Specification
Thermal shock	1. 30±3 minutes at -40° C±5° C, 2. Convert to +105° C (5 minutes) 3. 30±3 minutes at +105° C±5° C, 4. Convert to -40° C (5 minutes) 5. Total 100 continuous cycles	No apparent damage Fulfill the electrical spec. after test.
Humidity resistance	1. Humidity: 85% R.H. 2. Temperature: 85±5° C 3. Time: 1000 hours.	No apparent damage Fulfill the electrical spec. after test.
High temperature resistance	1. Temperature: 150° C±5° C 2. Time: 1000 hours.	No apparent damage Fulfill the electrical spec. after test.
Low temperature resistance	1. Temperature: -40° C±5° C 2. Time: 1000 hours.	No apparent damage Fulfill the electrical spec. after test.
Soldering heat resistance	1. Solder bath temperature : 260±5℃ 2. Bathing time: 10±1 seconds	No apparent damage
Solderability	The dipped surface of the terminal shall be at least 95% covered with solder after dipped in solder bath of 245±5℃ for 3±1 seconds.	No apparent damage

(2) Storage Condition

(a) At warehouse:

The temperature should be within 0 ~ 30℃ and humidity should be less than 60% RH.

The product should be used within 1 year from the time of delivery.

(b) On board:

The temperature should be within -40~85℃ and humidity should be less than 85% RH.

(3) Operating Temperature Range

Operating temperature range : -40℃ to +105℃.

8. Recommended Reflow Soldering

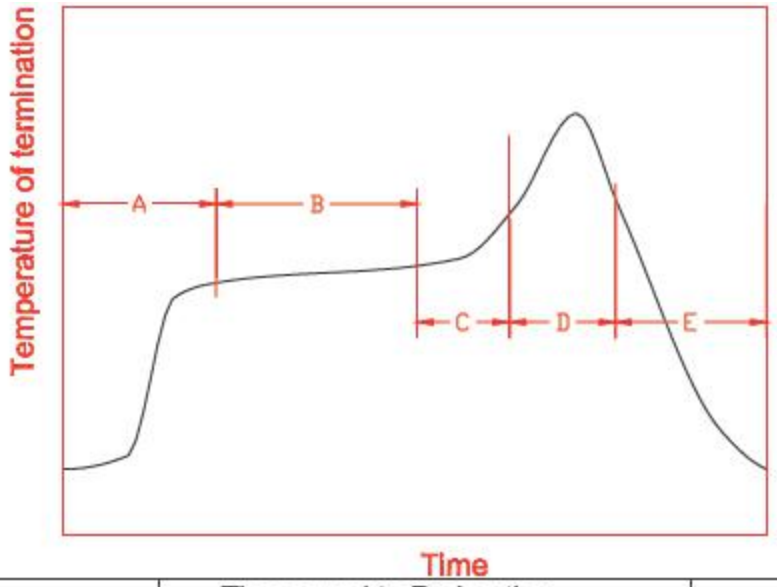

A	1st rising temperature	The normal to Preheating temperature	30s to 60s
B	Preheating	140℃ to 160℃	60s to 120s
C	2nd rising temperature	Preheating to 200℃	20s to 40s
D	Main heating	if 220℃	50s～60s
		if 230℃	40s～50s
		if 240℃	30s～40s
		if 250℃	20s～40s
		if 260℃	20s～40s
E	Regular cooling	200℃ to 100℃	1℃/s ～ 4℃/s

*reference: J-STD-020C

(1) Soldering Gun Procedure

Note the follows, in case of using solder gun for replacement.

(a) The tip temperature must be less than 350° C for the period within 3 seconds by using soldering gun under 30 W.

(b) The soldering gun tip shall not touch this product directly.

(2) Soldering Volume

Note that excess of soldering volume will easily get crack the body of this product.

9. Taping Package and Label Marking: (unit: mm)

(1) Quantity/Reel: 5000pcs/Reel

(2) Carrier tape dimensions

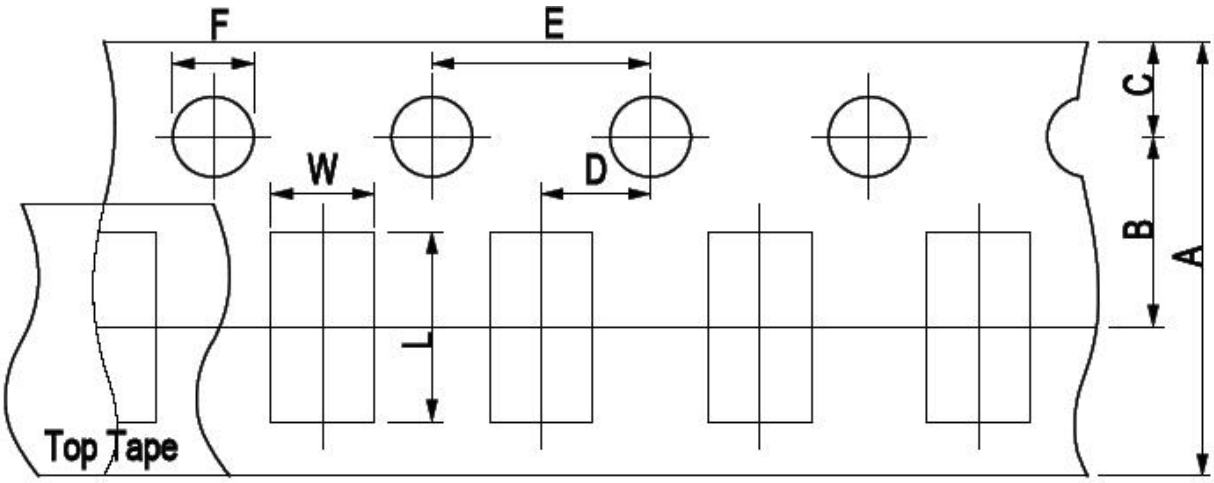

Type	A	B	C	D	E	F	L	W
2450-21	8.00±0.3	3.50±0.05	1.75±0.1	2.00±0.05	4.00±0.1	1.50±0.1	2.30±0.1	1.55±0.1

(3) Taping reel dimensions

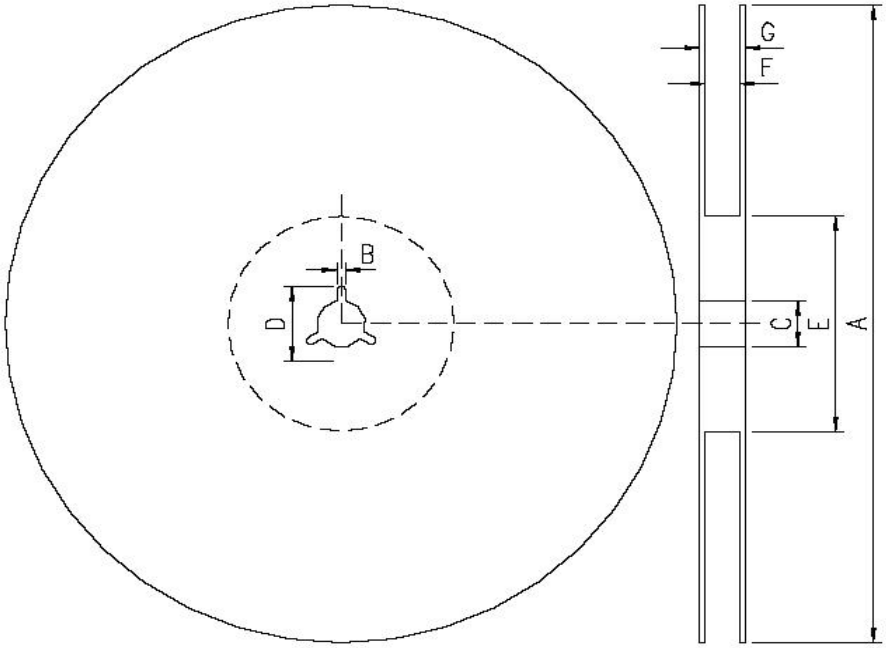

A	178.0±2.0
B	2.0±0.5
C	13.0±0.5
D	21.0±0.8
E	62.0±1.5
F	9.0±0.5
G	13.0±1.0