Air Wallet

User Manual

Works with
Apple Find My

Index

01 Getting Started
02 Add Your AirWallet
03 Locate Your AirWallet
04 Find AirWallet Out Of Range
05 When Your AirWallet Is Lost
06 Resetting AirWallet
07 Extras
08 The Fine Prints

Getting Started 01

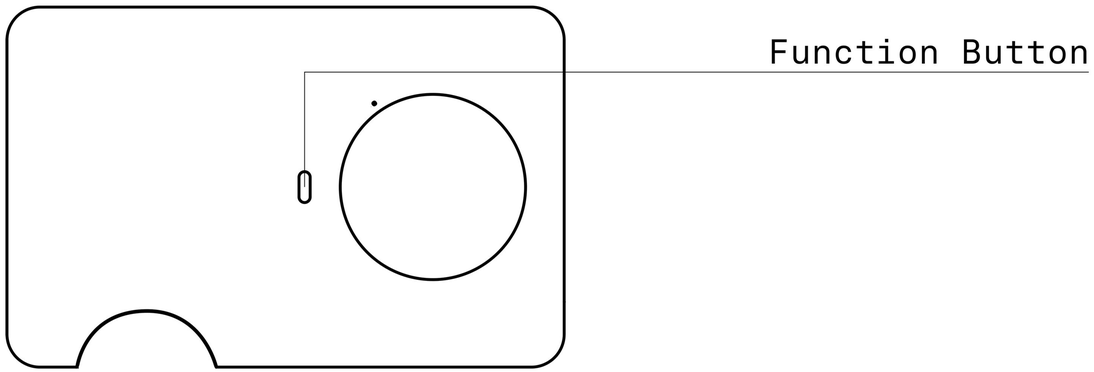

01.1 Power On / Off:

• Press your Air Wallet's Function Button once to turn on, it should beep once indicating it is powered on.

• To power off, hold the same button for at least 3 seconds. You will hear 2 beeps indicating your Air Wallet ` is powered off.

01.2 Check For Updates:

To use the Apple Find My app to locate this item, the latest version of iOS, iPadOS, or macOS is recommended. The Find Items app on Apple Watch requires the latest version of watchOS.

02 Add Your Item Locator

02.1 Start The App

• Open Find My app on your supported iPhoneor iPad.

• Allow notifications from the app.

02.2 Connect Your Air Wallet

• Power on your Air Wallet.

• Tap+, then“Add Other ltem”.

• Once your Air Wallet is located, tap "Connect".

• Choose a recognizable name and emoji for your AirWallet and tap"Continue".

• Find My will ask for confirmation to add your AirWallet to your Apple ID Tap “Agree”.

• Tap "Finish" and your Air Wallet will be set up and ready to be connected to whatever item you wish to locate,e.g. your keys.

Locate Your Item 03

03.1 Find AirWallet When It's Nearby:

• Open Find My app and select the "Items" tab or open the Findltems app on your Apple Watch.

• Tap on your ltem Locator from the list.

• Tap ""Play Sound" to make your ltem Locator beep.

• Tap "Stop Sound" to stop the beeps once you find.

03.2 Find AirWallet Last Known Location:

• Open Find My app and select the "ltems" tab or open the Find ltems app on your Apple Watch.

• Tap on your Air Wallet from the list.

• Your Air Wallet's last known location will appear on the map.

• To navigate to that last known location, tap “Directions" to open the Apple Maps app.

04 Find Item Out Of Range

04.1 Enabling"Notify When Left Behind":

• Open Find My app and select the "ltems" tab or open the Findltems app on your Apple Watch.

• Tap on your Air Wallet from the list.

• Under "Notifications" enable the "Notify When Left Behind"toggle.

• You will receive a notification when you leave your Air Wallet behind and it's no longer in range of your device.

04.2 Enabling"Notify When Found":

• Under "Notifications", enable the "Notify Whe Found" toggle.

• When your Air Wallet is seen by anotherFind My enabled device, you will receive a notifcation of its updated location.

• Note:"Notify When Found" can only be activated when your Air Wallet is out of range.

When Your Item Is Lost 05

05.1 Enabling"Lost Mode":

• Open Find My app and select the "ltems" tab or open the Findltems app on your Apple Watch.

• Tap on your Air Wallet from the list.

• Under "Lost Mode" tap "Enable".

• A screen detailing Lost Mode will pop up, tap "Continue".

• Enter your phone number or email address and tap "Next".

• You may enter a message that will be shared with the personthat finds your item.

• Tap "Activate" to enable "Lost Mode".

• Note: When "Lost Mode" is enabled, "Notify When Found" isautomatically enabled.

• Note: When"Lost Mode" is enabled,your Air Wallet is lockedand cannot be paired to a new device.

06 Resetting Air Wallet

06.1 Remove The AirWallet From Find My App:

• Open Find My app and select the "Items" tab.

• Tap on your AirWallet from the list.

• Please ensure"Lost Mode" is disabled.

• Scroll to the bottom of the screen and tap “Remove ltem.

• A summary will open, tap "Remove" to confirm.

06.2 Factory Reset Your AirWallet:

• After successfully removing the AirWallet from Find My app,press the AirWallet's function button four times rapidly and then hold it a fifth time until you hear a ringing chime.

• The AirWallet is now reset and ready to be paired to a new device.

Extras

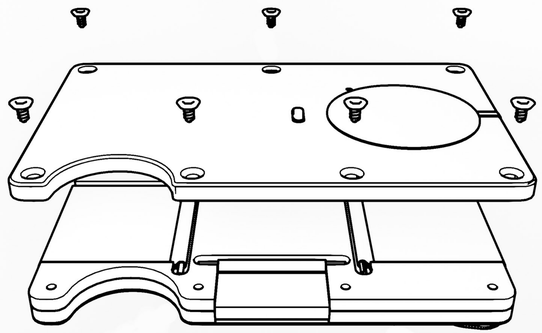

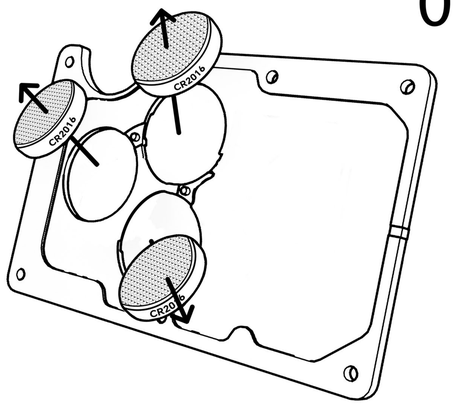

07.1 Replace The Battery:

- Remove the screws on front of your Air Wallet with a screwdriver
- Replace the batteries with new CR2016 battery placing them negatively up (text facing down).
- Carefully close the Air Wallet by fastening the screws on both sides.

07.2 Unwanted tracking:

lf any Find My network accessory separated from its owner is seen moving with you over time, you'll be notified in one of two ways:

• 1. lf you have an iPhone, iPad, or iPod touch, Find My will send anotification to your Apple device.This feature is available on iOS or iPadOS 14.5 or later.

• 2. lf you don't have an iOS device or a smartphone, a Find My network accessory that isn't with its owner for a period of time will emit a sound when it's moved.

These features were created specifically to discourage people fromt rying to track you without your knowledge.

The Fine Print

This device complies with part 15 of the FCC Rules. Operation is subject to the following two conditions: (1) This device may not cause harmful interference, and (2) this device must accept any interference received, including interference that may cause undesired operation. NOTE: The manufacturer is not responsible for any radio or Tv interference caused by unauthorized modifications or changesto this equipment. Such modifications or changesnot expressly approved by the party responsible for compliance could void the user's authority to operate this device. The device has been evaluatedto meet general RF exposure requirement, The devicecan be used in portable exposure condition without restriction. Federal Communication Commission (FCC) Radiation Exposure Statement Power is so low that no RF exposure calculation is needed.

This equipment has been tested and found tocomply with the limits for a Class B digital device,pursuant to part 15 of the FCC Rules.These limits aredesigned to provide reasonable protection against harmful interference in a residential installation. This equipment generates uses and can radiate radiofrequency energy and,if not installed and used inaccordance with the instructions, may cause harmful interference to radio communications.However, there is no guarantee that interference will not occur in aparticular installation. lf this equipment does cause harmful interference to radio or television reception, which can be determined by turning the equipment off and on, the user is encouraged to try to correct the interference by one or more of the following measures: Reorient or relocate the receiving antenna. Increasethe separation between the equipment and receiver. Connect the equipment into an outlet on a circuit different from that to which the receiver is connected.

The Apple Find My network provides an easy, secure way to locate compatible personal items using the Find My app on your iPhone, iPad, Mac, or the Find Items app on Apple Watch.

Use of the Works with Apple badge means that a product has been designed to work specifically with the technology identified in the badge and has been certified by the product manufacturer to meet Apple Find My network product specifications and requirements. Apple is not responsible for the operation of this device or use of this product or its compliance with safety and regulatory standards.

Apple, Apple Find My, Apple Watch, Find My, iPhone, iPad, iPadOS, Mac, macOS and watchOS are the trademarks of Apple Inc. IOS is a trademark or registered trademark of Cisco in the U.S. and other countries and is used under license.