光伏智能采集网关
PV Smart Gateway

用户手册
USER MANUAL
PV-G1000 / SL-SRSD-TYPE A2

Version： V1.2.0

Document No： SZSLC-PUM-PVG-V1.2.0

Date of Issue： 2024-04-17

Copyright © **Shenzhen Siliconductor Technology Co., Ltd. 2024**

No partly or totally of this Manual allow to be extracted, copied and distributed for infringing purpose of use by any entity and individual in any printed or electronic form without written consent by Shenzhen Siliconductor Technology Co., Ltd.

CONTENTS

1 Overview. 4
1.1 Manual Overview 4
1.2 Operating Personnel 4
1.3 Revision Record 4
1.4 Notice 4
1.5 FCC Warning 4
2 Precautions 5
2.1 Liability Exemption 5
2.2 Requirements for Operators 5
2.3 Requirements for Operational Environment 6
3 Product Introduction 6
3.1 Brief introduction on Gateway 6
3.2 Product Models 7
3.3 Product Structure Drawing 7
3.4 Icon Descriptions 7
3.5 Networking Scenarios 7
4 Site Installation 8
4.1 Matters Need Attention 8
4.2 Gateway & Functional Kit Package 9
4.3 Open-Packaging Inspection 10
4.4 Installation Procedure 10
5 Smart Operation & Maintenance Platform 11
6 Function Check 11
7 Product Certification & Quality Management 13
8 Technical Specifications 14

Copyright © SILICONDUCTOR

1 Overview

1.1 Manual Overview

This manual contains detailed introductions of PV Intelligent Data Acquisition Gateway series products (abbreviate as "Gateway" in follows) about functional performances, installation methods. Before installing or using the devices, please read the instructions, requirements and precautions in the user manual carefully.

1.2 Operating Personnel

This manual is suitable for device Installers, O&M Staff, FAE, Technical Support Engineers, Sales Engineers and Power Station Owner.

1.3 Revision Record

No.	Contents	Version	Date of Issue
1	Create document, Newly Add content of Model: SL-SRSD-TYPE A2	V1.0.0	2023.09.25
2	Update related content of SL-SRSD-TYPE A2	V1.1.0	2023.12.07
3	Add content of Model: PV-G1000	V1.2.0	2024.04.17

1.4 Notice

All or part of the products,services and features described in the manual may not be within the purchase scope or the usage scope.The purchased products,services and features are stipulated by the commercial contracts signed between Siliconductor and the customer.

This user manual will be updated at irregular intervals and be subject to change without notice.

Unless otherwise specified, this user manual is only used as a operation guide, all statements, information and recommendations in the manual are provided "AS IS" without warranties, guarantees or representations of any kind, either express or implied.

1.5 FCC Warning

Please take attention that changes or modification not expressly approved by the party responsible for compliance could void the user's authority to operate the equipment.

This device complies with Part 15 of the FCC Rules. Operation is subject to the following two conditions:

(1) This device may not cause harmful interference, and

(2) This device must accept any interference received, including interference that may cause

Copyright © SILICONDUCTOR

undesired operation.

This equipment complies with FCC radiation exposure limits set forth for an uncontrolled environment. This equipment should be installed and operated with minimum distance 20cm between the radiator & your body.

2 Precautions

2.1 Liability Exemption

Before shipping, storage, installation, operation, use, and maintenance of the product, please read this user manual and conduct a comprehensive product implementation research. The product must be used under the conditions that complies with the design specifications; the use process shall strictly follow the precautions in this user manual, and comply with applicable local laws, regulations, standards, and code requirements.

In the event of any listed of the following, the manufacturer does not assume liability for quality warranty and product safety:

- Damage and accidents that attributed to force majeure.(including but not limited to earthquake, flood, fire, war and other extreme conditions);
- Product damage and accidents that attributed to improper transportation conditions;
- Product damage and accidents that attributed to improper storage;
- The installation & use process does not comply with applicable local laws & regulations also does not meet the requirements of local standard;
- Non-professional, untrained personnel operate and use the device;
- Disassemble or change of products and modify the software code without authorization or permission;
- To operate devices outside the range permitted by technical parameters, use devices out of Warranty period;
- Any personal injury, death, and property loss caused by action of negligent, intentional, gross negligence or improper operation of the user or a third party (not the reason of the Manufacturer).

2.2 Requirements for Operators

1 Each operator should read the user manual and be aware of the requirements and precautions;

2 Operators should known on the structures & working principles of grid-connected photovoltaic generation systems;

3 Operators should comply with safety regulations and requirements related to electric systems, mechanical operation and work high above the ground scene;

4 Operators should comply with the relevant regulations and standards related to safety and electrical in the country or region where the device is used;

Copyright © SILICONDUCTOR

5 Operators should be well-trained by SLC on product installation & operating and be familiar with operation and use of devices;

6 Wear of personnel protective equipment and make good insulation protection; Strictly prohibit of wearing conductive metallic jewelry(such as watch and rings) .

2.3 Requirements for Operational Environment

1 Before operation：

- Ensure that the devices are stored in a suitable temperature & humidity,clean & dry and well-ventilated environment;
- Avoid storing the device in an environment with large amounts of dust and volatile gases;
- Strictly prohibited to install,use and operate the devices in inclement weather.(such as lightning, rainstorm, and strong wind);
- Mounting tools should be safe and professional, which should be insulated and qualified for electrical operation and should not be overload operated.

2 During Installation：

- Ensure that the cable connections are tightly and well-insulated;
- Ensure that there is no voltage in the strings by switching off the RSD/MRSD, inverter and power supply;
- During installation, do not touch any components other than those required for wiring work.

3 During Run Time：

- Do not touch the devices intentionally to avoid electric shock, burns or other accidents.

3 Product Introduction

3.1 Brief Introduction on Gateway

The PV Intelligent Date Acquisition Gateway (abbreviate as“Gateway”in follows) is a communication facility set up in the pv module-level shutdown system. Through the flexible and automatic networking mechanism and high-speed and stable communication mode, the gateway can quickly identify the shutdown instruction and quickly shut off the pv module to ensure the safety of the photovoltaic system. At the same time, the gateway can monitor the running status of the module in real time upload massage to the cloud platform to implement the intelligent operation and maintenance management of the pv power station. The gateway is designed to perform function with matched supporting parts.

Copyright © SILICONDUCTOR

3.2 Product Models

This user manual mainly covers the following product models:

Models
PV-G1000 / SL-SRSD-TYPE A2

3.3 Product Structure Drawing

Model	Drawing
PV-G1000 / SL-SRSD-TYPE A2	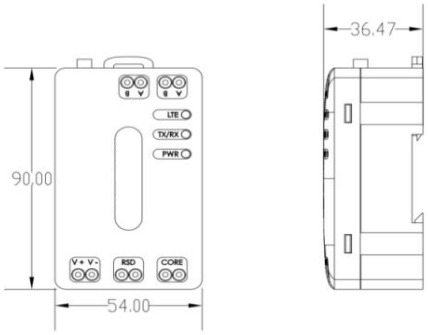

3.4 Icon Descriptions

No	Icon	Icon meaning
1	LTE	Network LED: Red light flashing quickly indicates normal communication
2	TX/RX	Carrier Signal LED: Green Light indicates normal communication
3	PWR	Power LED: Red light indicates normal power supply

3.5 Networking Scenarios

1 The following diagram shows the networking scenario of the shutdown device and the intelligent acquisition gateway:

Copyright © SILICONDUCTOR

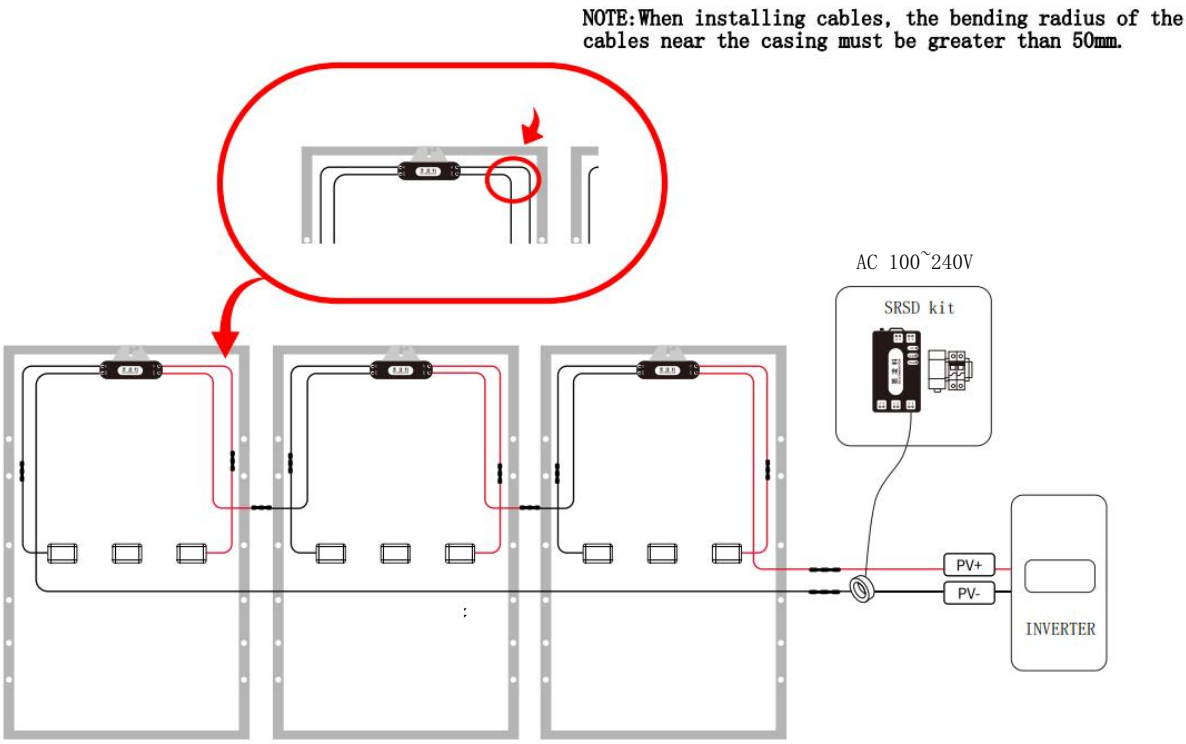

2 The following diagram shows the networking scenario of the optimizer and the intelligent acquisition gateway:

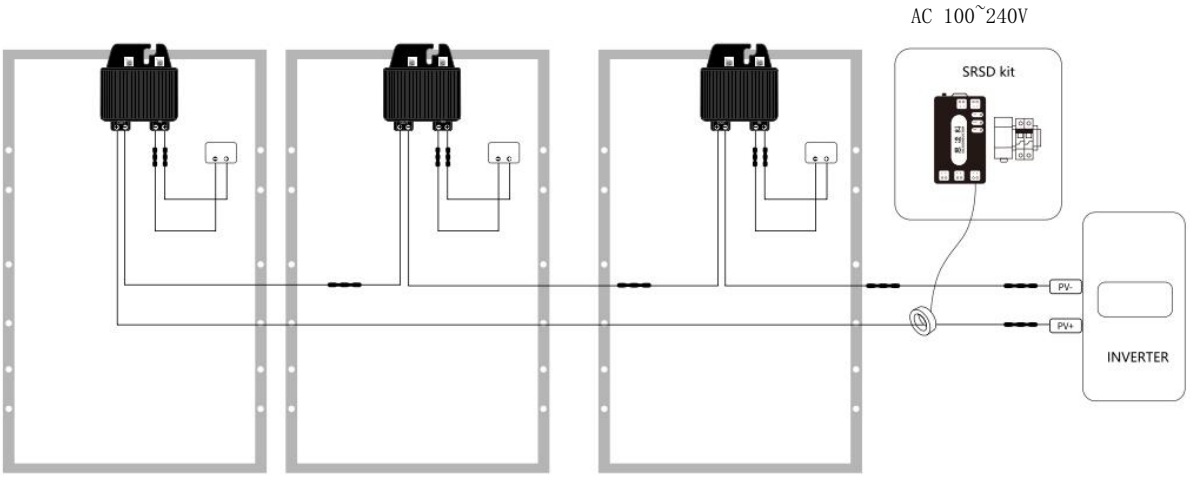

4 Site Installation

4.1 Matters Need Attention

1 Conduct fully site research leave enough space and plan reasonably for the installation position on both gateway and water-proof control box kit;

Copyright © SILICONDUCTOR

2 Strictly prohibited to install gateway outside water-proof box or exposed to soaking scene;

3 Ensure the cables length is enough to connect;

4 Strictly prohibited to store flammable and explosive materials in the installation area of gateway & matched kit box.

4.2 Gateway & Functional Kit Package

No	Item	quantity	Sample Drawing（In kind prevail）	Remarks
1	Intelligent Date Acquisition Gateway	1	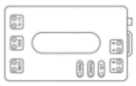	
2	Water-proof Box	1	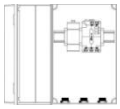	Iron/plastic material option
3	Master switch	1	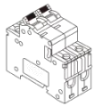	
4	Power supply	1		Voltage converter module on 100～240V to 10～18V
5	Magnet Ring	1	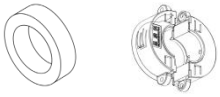	Open or closed magnetic rings are optional
6	4G module	1	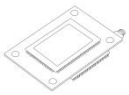	Mated with 4G card
7	4G antenna	1		
8	WiFi antenna	1		
9	Emergency stop button	1		option
10	Rail	1	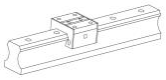	
11	wire、screw、bolt	some	N/A	In kind prevail

Note: Only the key materials be listed in the table and for reference only. The final delivery fittings can be optional integrated refer to the actual requirements.

Copyright © SILICONDUCTOR

4.3 Open-Packaging Inspection

1 Outer Packing carton Inspection

Any packaging damage (include of carton broken, hole or other bad carton conditions) may result in devices damaged in the carton. So please contact directly to your dealer and do not open the carton if you find the packaging is in bad conditions.

2 Devices Inspection

If packaging is in good conditions then open the box and check whether the inside contents are complete and intact. Any items is missing or damaged, contact your dealer as soon as possible.

4.4 Installation Procedure

1 This product can use the following two communication methods：

A. 4G communication mode:

① Insert 4G card：

- Ensure the Gateway is power off before installing the SIM card;
- Push the Gateway clip upward to unlock from the rail and open the upper cover;
- - Push upward to open the metal cover of the SIM card holder and insert the NANO SIM card. Be note to keep the SIM card gap and make sure card tray gap in same direction when sim card inserting;
- Press the card holder cover and push down to lock the SIM card;
- Cover the Gateway upper cover back and lock down to the rail.

② Install suction cup 4G antenna to suitable place and connect it to gateway 4G antenna port(Attention: The antenna is vertically attached to the metal, and the distance from the surrounding metal is greater than 20CM).

B. WIFI communication mode

① Install WIFI antenna to suitable place and connect it to gateway WIFI antenna port(Attention: The antenna is vertically attached to the metal, and the distance from the surrounding metal is greater than 20CM).

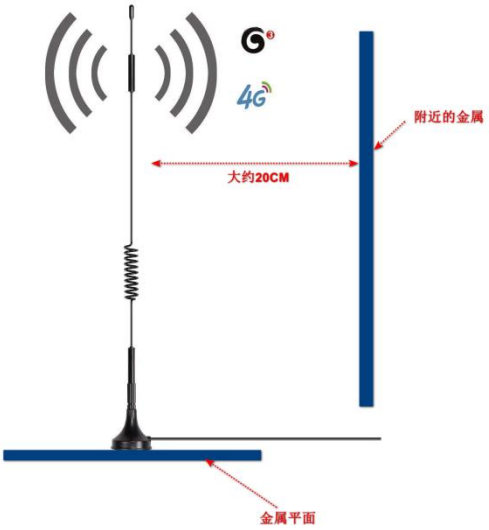

Copyright © SILICONDUCTOR

2 Connect the magnet ring to gateway coupling interface port through a wire (No need to distinguish positive and negative poles), the wire should be wrapped 3 times around the magnet ring;

3 In networking system, the DC bus must pass through the magnetic ring (see 3.5 Networking Scenario)，that the DC bus can be both positive and negative, but if it passes through multiple DC buses, they must all be positive or negative；

4 Connect to power interface by wire;

5 If there is an emergency stop button used in the Gateway & functional kit package, then connect them through a wire (No need to distinguish positive and negative poles).

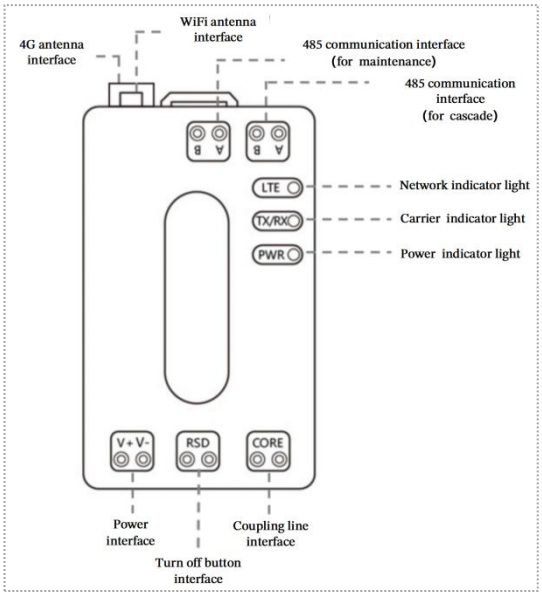

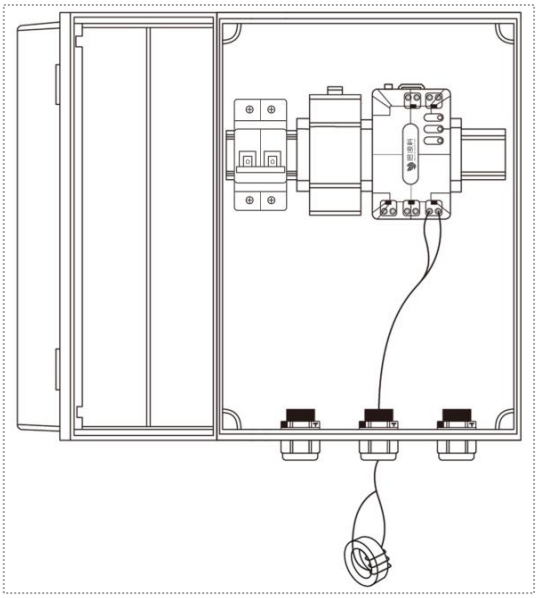

Note: Above descriptions of inner fitting-up and outside connection pattern of water-proof box is just for reference only. The final implement refer to the actual operation prevail.

5 Smart Operation & Maintenance Platform

The Gateway works rely on coordinated support with PV module level rapid shutdown device (abbreviate as "RSD/MRSD"）、PV module level optimizer (abbreviate as "Optimizer"）、 intelligent operation and maintenance management platform (abbreviate as "platform" ） to implement intelligent O&M on PV power station. The connection methods and usage details with supporting products can be checked in user manual(contact your distributor for user manual or scan code to download).

6 Function Check

When the node (shutdown device or optimizer) and the photovoltaic intelligent acquisition gateway have been configured, the photovoltaic cloud platform can be used to check the function of the whole photovoltaic module intelligent operation and maintenance system. The check steps are as follows：

Copyright © SILICONDUCTOR

1 Check the connectivity between the node(RSD/MRSD or Optimizer) and gateway

In general, after the archive is imported into the acquisition gateway, the gateway will send a heartbeat signal to the node. During this time, to conduct a check, it is necessary to use the local host computer to read the node parameter information under the acquisition gateway. If the information can be read normally, it indicates that the two-way communication between the node and the acquisition gateway is functioning properly; ;

2 Check connectivity between Gateway and Cloud platform.

- Create the corresponding power station on the PV cloud platform;
- Enter the SN number of the gateway to bind the gateway to the power station;
- After the binding is complete, check whether the gateway of the current SN is online.

Copyright © SILICONDUCTOR

7 Product Certification & Quality Management

Product Certification

UL 1741: UL Std. No. 1741-2021

CSA C22.2 No. 330-23

UL 3741: ANSI/CAN/UL 3741-2020

CE-LVD: IEC/EN 62109 1-2010

CE-RED: EN 301 511, EN 301 908-1/13, EN 300 328

Safety Regulations

EMC:EN 301 489-1/17/52, EN IEC 61000-6-1/2/3/4, EN IEC 61000-3-2/3

Rapid Shutdown Standard

NEC-2017/ NEC-2020/ NEC-2023 Section 690.12

Federal Communications Commission

FCC: 47 CFR Part 15B, 47 CFR Part 15C (15.247), 47 CFR 2.1091

Industry Canada

IC: ICES-003: Issue 7 October 2020

Management System Certification

GB/T19001-2016/IS09001:2015 Quality Management System

GB/T24001-2016/IS014001:2015 Environmental Management System

GB/T45001-2020/IS045001:2018 Occupational Health and Safety Management System

Supply chain management

Strict supplier qualification audit and regular assessment, incoming material control specifications, incoming materials quality enhancement, controlling product quality from the source, providing more reliable products for customers.

Copyright © SILICONDUCTOR

8 Technical Specifications

Model		PV-G1000 / SL-SRSD-TYPE A2	
Communication			
communication scenario	**Power line communication**	HPLC（High-speed power line carrier communication）	
	With platform	4G	WiFi
communication speed	**Power line communication**	1600 Kbps ～ 8 Mbps/adaptive approach	
	With platform	Max downlink rate 10 Mbps Max uplink rate 5 Mbps	Support Wifi 2.4G 802.11b/g/n
Certification			
Safety		UL 1741 UL 3741 CSA C22.2 No. 330-23 NEC-2017&2020&2023 690.12 IEC/EN 62109-1	
EMC		FCC: 47 CFR Part 15B ICES-003:2020 IEC/EN61000-6-1/-2/-3/-4	
Weight and Overall Dimension			
Maximum support quantity of modules		200	
Maximum support quantity of strings		12	
Data acquisition interval		5min(configurable)	
Power supply		10～18V DC	
Number of interfaces		2*RS485	
Serial port rate		9600bps	
Dimension		90mm(length)×54mm(width)×36.5mm(thickness)	
Weight		<0.1kg（No kits included）	
Operating Temperature		-20～+65℃	
Humidity Range		0 ～ 100%	

Copyright © SILICONDUCTOR

思 凌 科
SILICONDUCTOR

Shenzhen Siliconductor Technology Co., Ltd.

Web : http://www.siliconductor.com/

Add: Room 401, Building 122, Liantang First Industrial Zone, No. 72 Guowei Road, Xianhu Community, Liantang Street, Luohu District, Shenzhen

Phone: 0086-010-60390601、0086-13910551271

E-mail: mul@siliconductor.com

Apple

Official