Datasheet

for

RTX1090 DECT communication module – support for multi-level modulation

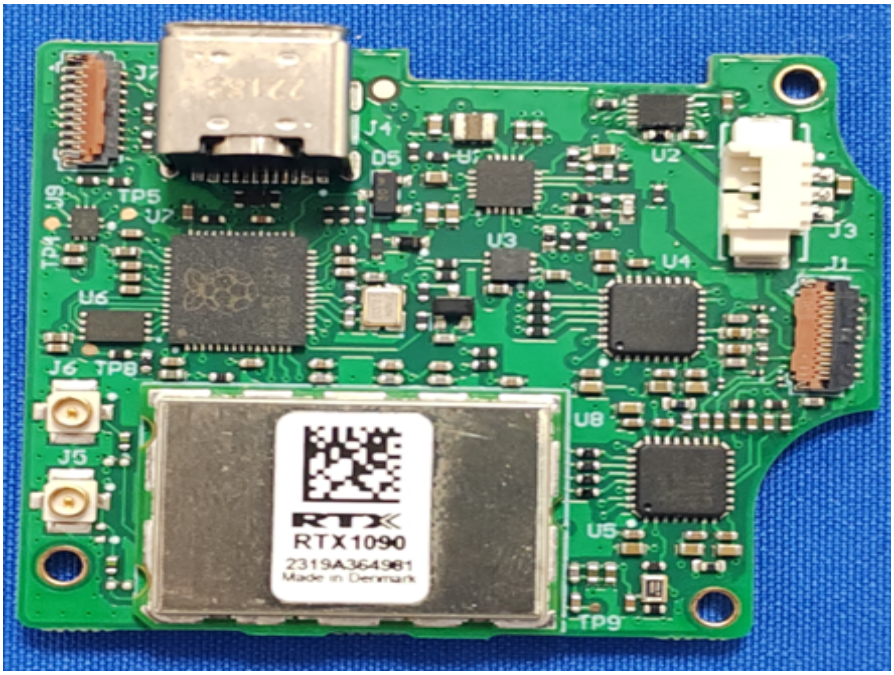

Contents

1 Document info 5
1.1 Document scope 5
1.2 References 5
1.3 Terms and abbreviations 5
1.4 Document history 6
2 Concept 7
2.1 Module description 7
3 Module features 8
3.1 Zero Blind Slot 9
3.2 Multi-level modulation 9
4 Mechanical specification 10
5 Hardware specification 12
5.1 Electrical specification 12
5.1.1 Current consumption 12
5.1.2 Recommended operating conditions 13
5.1.3 DC characteristics 13
5.1.4 Common electrical specifications – GPIO pads 13
5.1.5 Electrical specifications – DC characteristics 14
5.2 Module pin specification 14
6 Design guidelines 17
6.1 External parts 17
6.1.1 Antennas 17
6.1.2 Module placement on carrier board 17
6.1.3 Power supply 17
6.2 Radio performance 17
6.3 Test interface 18
7 Soldering profile 19
7.1 Preheat 19
7.2 Soak or dry-out 19
7.3 Reflow 19
7.4 Cooling 19
8 Packaging of module 19
9 Standard and approvals 20
9.1 Radio, EMC, and safety 20
9.2 Environmental 20
10 Product labeling 21
10.1 Serial number definition 21
10.2 Barcode 21
11 Tape and reel specification 22
12 Environmental declaration 22
13 Life cycle notifications 22

Figures

Figure 1: RTX1090 module main blocks 7
Figure 2: Module dimensions 10
Figure 3: Module solder footprint 11
Figure 4: Solder paste composition 19
Figure 5: Product labeling 21
Figure 6: Tape and reel specification 22

Tables

Table 1: Main components 12
Table 2: Current consumption 12
Table 3: Recommended operating conditions 13
Table 4: DC characteristics 13
Table 5: Electrical specifications - recommended operation conditions 13
Table 6: Electrical specifications - DC characteristics 14
Table 7: RTX1090 pin description 16
Table 8: RTX1090 key RF parameters 17
Table 9: Test and debugging interface 18
Table 10: Japan type approvals 20
Table 11: EU type approvals 20
Table 12: US type approvals 20
Table 13: Environmental 20

1 Document info

1.1 Document scope

This document provides the technical description of the RTX1090 DECT communication module from RTX A/S. It is intended as the technical documentation that accompanies the associated quotation on delivery of RTX1090 modules (stand-alone hardware delivery). The module operates in the DECT frequency band[1] and supports both standard DECT/CAT-iq™ solutions, as well as customized solutions designed to co-exist in the DECT frequency band. The modules are delivered with a standard RTX production test software. Customized firmware for specific applications must be specified and quoted separately.

Typical applications for the module are:

- Wireless intercoms
- Wireless microphones
- Wireless speakers
- General purpose audio transmission
- Data transmission and telemetry

The target readers of this document are customer system engineers, system architects, and component selection decision makers.

1.2 References

Readers of this document may find additional information and supportive specifications in the following documents.

Reference	Name
1	DA14495 datasheet from Dialog Semiconductor (NDA may apply)
2	PSU guideline - RTX1090 DECT communication module

1.3 Terms and abbreviations

Abbreviation	Description
ADC	Analog to Digital Converter
ARIB	Association of Radio Industries and Businesses
ARM	Advanced RISC Machine
CAT-iq	Cordless Advanced Technology—internet and quality
CELT	Constrained Energy Lapped Transform
COMP	Comparator
CTS	Clear to Send
D8PSK	Differential 8-ary Phase Shift Keying
DBPSK	Differential Binary Phase Shift Keying
DECT	Digital Enhanced Cordless Telecommunications
DMA	Direct Memory Access
DQPSK	Differential Quadrature Phase Shift Keying
DSP	Digital Signal Processor
EMC	Electromagnetic Compatibility
ETSI	European Telecommunications Standards Institute
FP	DECT Fixed Part
FIFO	First in First out
GFSK	Gaussian Frequency Shift Keying
GND	Ground
GPIO	General Purpose Input/Output
I/O	Input/Output

[1] The RTX1090 DECT communication module supports operation in multiple geographical areas and operates in the frequency range from 1.880MHz to 1.930MHz.

Abbreviation	Description
LED	Light Emitting Diode
LGA	Land Grid Array
MAC	Media Access Control
NiHM	Nickel Metal Hydride
NTC	Negative Temperature Coefficient
PAEC	Perceptual Acoustic Echo Cancellation
PCB	Printed Circuit Board without Components
PCBA	Printed Circuit Board without Components
PCM	Pulse Code Modulation
PDM	Pulse Density Modulation
PHY	Physical Layer
PON	Power on
PP	DECT Portable Part
PSRR	Power Supply Rejection Ratio
RF	Radio Frequency
REACH	Registration, Evaluation, Authorization and Restriction of Chemical substances
RoHS	Restriction of Hazardous Substances
RTS	Request to Send
RTX1090	Product name of the RTX 1.9GHz DECT module
SAR	Specific Absorption Rate
Sheersound™	Supreme and unique audio codec developed by RTX
SOCN	State of Charge Negative Polarity
SOCP	State of Charge Positive Polarity
SPI	Serial Peripheral Interface
SWDIO	Serial Wire Debug Input/Output
SWCLK	Serial Wire Clock
TCE	Exponential temperature coefficient
TDMA	Time Division Multiple Access
TELEC	Telecom Engineering Center
UART	Universal Asynchronous Receive and Transmit
UL	Underwriters Laboratories
ULE	Ultra Low Energy
ULP	Ultra Low Power
VBAT	Input for fixed and battery supplies
VBUS	Input for USB supplies
VRF	Voltage for RF supply
VSUPPLY	Internal linear regulator generating 3.45V, sourcing from VBAT or VBUS

1.4 Document history

Revision	Date	Comments
1.0	11.05.2020	First published version
1.1	14.08.2020	Added comments regarding 3V3 output voltage
1.2	04.11.2020	Added reset levels
1.3	16.12.2020	RF power tolerances added

2 Concept

The RTX1090 is a generic DECT communication module[2] with support for multi-level modulation that allows wireless applications to operate in the frequency band, normally used by DECT/CAT-iq based cordless telephones, headsets, etc.

The module is a hardware host for customized application firmware (i.e. can be used as a stand-alone module with embedded application), or the module can be integrated into a design with an external host processor.

When obtaining the module from RTX, there are two delivery forms:

Stand-alone hardware delivery
When delivered as stand-alone, the module contains only a dedicated production test firmware, and the customer reprograms the module with a self-generated firmware.

Bundled with software delivery
When bundled with software, RTX will ship both the modules containing the production test firmware and a dedicated firmware for the customers to load during production. RTX can develop dedicated firmware based on one of our standard firmware platforms, under a separate agreement between the customer and RTX.

The rest of this document describes the hardware. For discussions of specific software needs, please consult your RTX contact or the sales team via sales@rtx.dk.

2.1 Module description

The RTX1090 is a DECT/CAT-iq module based on a Dialog Semiconductor DA14495 chip set. The module offers full DA14495 feature set and requires only a motherboard with antenna(s) and power supply in its basic form. Please note that the RTX1090 module only provides digital audio interfaces, and hence, if an analog audio interface is required, a codec and analog circuits need to be added to the motherboard as well. All DA14495 functional pins are connected to a module board contact point. The contact points are placed at the bottom of the module using LGA technology. The module is delivered with the necessary DA14495 parameters tested and calibrated. Furthermore, the module is delivered with a basic RTX firmware and customers can update the firmware with their own application software.

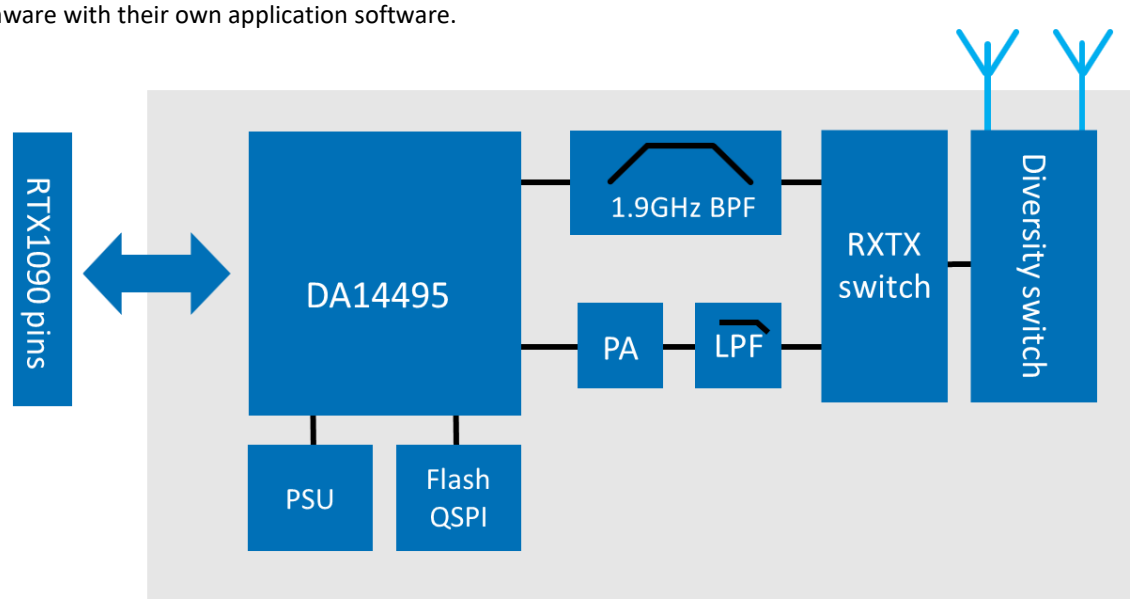

Figure 1: RTX1090 module main blocks

This document describes module pin out, pin description, electrical specifications, mechanical specifications, labeling, and packaging.

[2] Operation frequency is 1.880MHz to 1.930MHz.

3 Module features

The RTX1090 module features a small footprint with fully integrated radio transceivers with RF power amplifier, antenna diversity, and baseband processor for DECT-based audio applications using Zero Blind Slot, DECT (EU), DECT 6.0 (US), and J-DECT (Japan).

The RTX1090 module is based on the Dialog Semiconductor DA14495 CMOS IC with an external RF power amplifier. The HW related key figures are listed below.

Feature list

- Complies with DECT ETSI 300 175-2, -3, -8 and DECT 6.0
- Supported audio codec and audio features: G.726, G.722, CELT 4.0, PAEC 6.0, Sheersound™ along with other options via software customization
- Operating range:
  - VRF_PA2: 0.5 – 4.6VDC
  - VBAT: 3.1 – 5.0VDC
  - VBUS: 4.2 – 5.75VDC
- USB charge control for rechargeable battery (e.g. lithium-ion)
- Support for ULE

Analog interfaces

- 2 input 10-bit ADC, single ended/differential

Digital interfaces

- USB 2.0 HS/FS device/host MAC/PHY with DMA
- 41 I/O pads with state retention and slope control
- Dual UART full duplex 9.6kBd to 812.5kBd with FIFO and DMA support[3]
- Dual SPI+™ interface 20.736MHz (master/slave)
- I2C interface 100kHz, 400kHz, 1.152MHz (M/S)
- Dual PCM interface, M/S, 2 x 32bits, 196kHz, I2S
- Three stereo PDM I/O for digital microphones

Radio transceiver

- Integrated 1.9GHz transceiver (operation frequency from 1.880MHz to 1.930MHz (depending on country setting)

Radio transmitter

- Wi-Fi coexistence
- Antenna diversity
- Pre-defined RF power levels (typical power levels are indicated):
  - Max power mode (typically used for EU/J-DECT 2.0): 22.5dBm
  - High power mode (typically used for US): 19.5dBm
  - Support for discrete programmable power levels from 5dBm to 22.5dBm.
  - Temperature compensation from -30°C to + 70°C with ± 1dB power tolerance.

Available program memory

- 32Mbit flash

[3] Please note that only UART2 has DMA support – both UARTs have FIFOs and support HW flow control signals (CTS and RTS).

3.1 Zero Blind Slot

The RTX1090 module utilizes a Zero Blind Slot radio, i.e. a DECT radio which can utilize all the 24 slots in the DECT 10ms TDMA structure[4]. Consequently, this brings the following advantages:

- The agility of the interference avoidance mechanism is increased, which improves performance especially in high-density applications with significant DECT interference.

- The capacity of the system is greatly increased, as the FP can have twice the number of active connections, e.g. allowing more simultaneous channels in an intercom application. The capacity can even be increased further by utilizing a higher modulation (up to D8PSK) and/or optimizing the DECT protocol to a specific application.

3.2 Multi-level modulation

Most standard DECT radios only support one modulation form (GFSK), but the DECT standard defines a few additional modulation forms, hence providing a higher bit rate. The RTX1090 module supports multi-level modulation up to D8PSK for bit rates from 1.152Mbit/s up to 3.456Mbit/s. Supported modulation forms are (sensitivity): GFSK (-95dBm), DBPSK (-98dBm), DQPSK (-94dBm), and D8PSK (-89dBm)[5].

[4] As opposed to a blind slot radio, which is only capable of utilizing every second slot in the DECT 10ms TDMA structure. Because the radio frequency synthesizers in a blind slot radio is not fast enough to switch carrier frequency on slot to slot basis.
[5] Sensitivity numbers are referenced from reference 1.

4 Mechanical specification

The module is a rectangular PCB which is to be soldered onto a motherboard, using contact points at the bottom of the module PCB (i.e., the module employs LGA technology for the contact points). The component side of the module is covered by a shield, which is convenient for vacuum pick and place manufacturing equipment.

The module measures 15.4 x 21.6mm, and the module height is 2.60mm nom. (min: 2.20mm, max:2.84mm)[6]. The module has 88 contact points[7], each of which is made as a single solder point. The module does not have any buttons, LED, connectors, or a display.

The dimensions of the module are outlined in millimeters in the figure below. Please notice the three (3) guidance markings (two at the top of the module, and one at the bottom). Please refer to the footprint overview on the next page for dimensions and location of the soldering points.

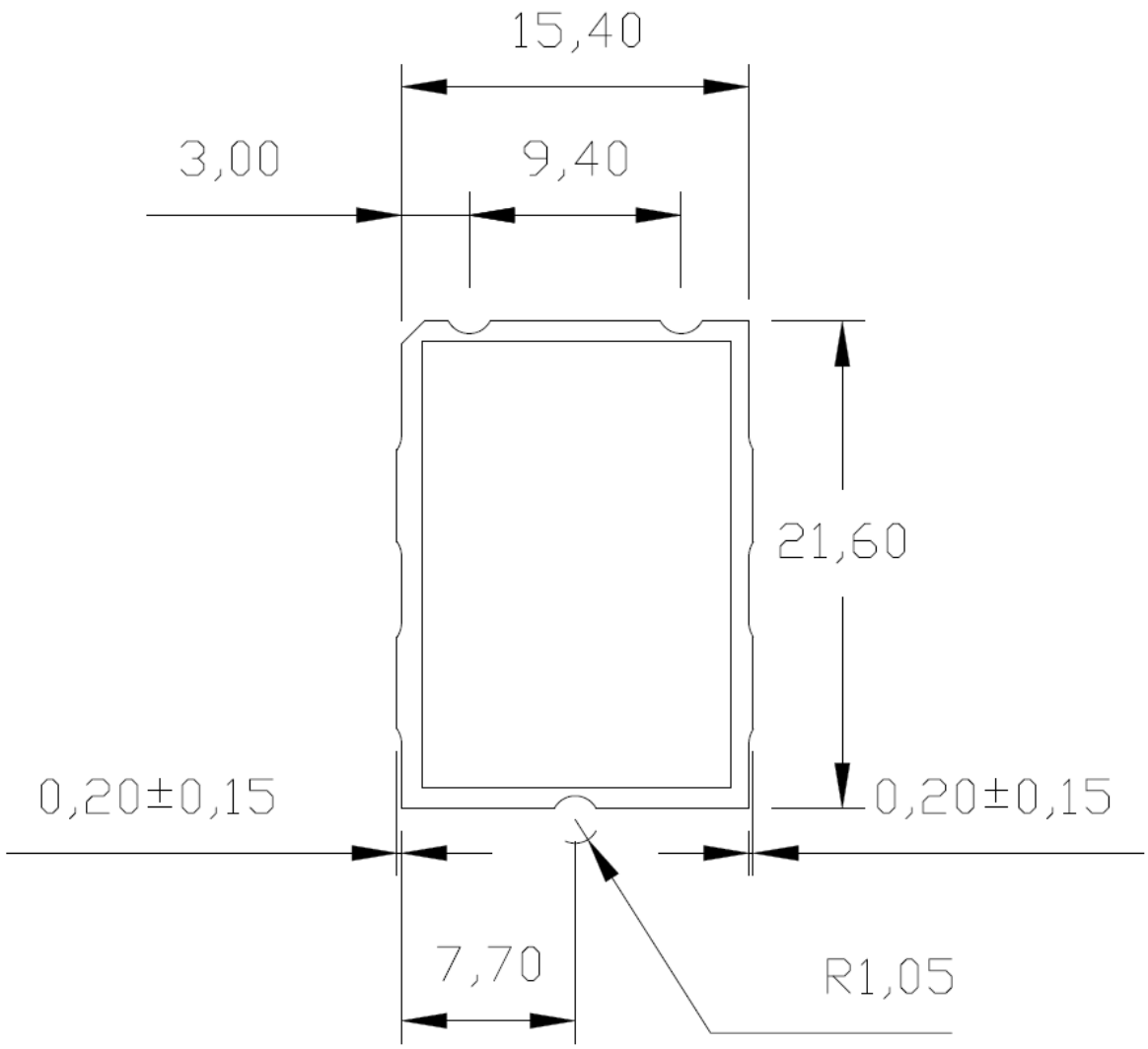

Figure 2: Module dimensions

[6] When the module is mounted on a carrier board, lift from the solder will elevate the module with typical 0.04mm. The elevation caused by soldering is included.
[7] The contact points are arranged in an 8x11 matrix structure as outlined in the module solder footprint, and the diameter of the pads is 0.8mm.

The module solder footprint (top view) including outlining of pin-numbering. The solder pad is 0.8mm in diameter:

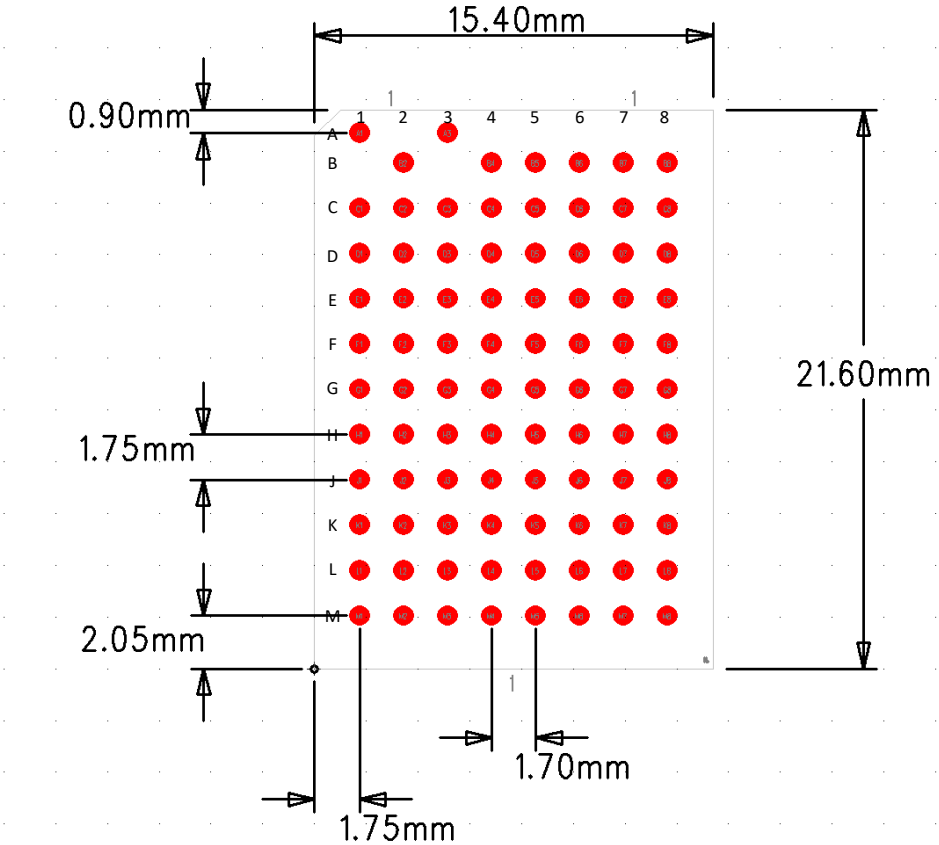

Figure 3: Module solder footprint

5 Hardware specification

The design is based on the following main components.

Description	Module
Baseband	DA14495 (Dialog Semiconductor)
PA	Skyworks SKY77762
Flash	32Mbit Quad SPI Flash

Table 1: Main components

The Quad SPI Flash memory is used to store the firmware and a non-volatile storage area for storage of tuning and other parameters on the module.

5.1 Electrical specification

The RTX1090 current consumption and power supply requirements depend on the software application (processing load, etc.). Before designing power supply circuitry, please consult your RTX contact. Specifications for typical use are given below.

5.1.1 Current consumption

The actual current consumption for the module depends on the application and peripherals connected. Below is an example for a DECT legacy test setup. Before making assumptions on actual power consumption, please consult your RTX contact, because it is highly dependent on the software features and system load your application will cause, e.g. use of core processor and DSP, LED drivers, audio codec front-end, etc.

Description	Conditions	Min.	Typ.*	Max.	Units
FP off mode			1		μA_{rms}
PP off mode			1		μA_{rms}
FP talk mode	Dual Slot		38		mA_{rms}
PP talk mode	Dual Slot		32		mA_{rms}
FP registration mode			13		mA_{rms}
PP registration mode			19		mA_{rms}
FP idle mode			12		mA_{rms}
PP idle mode			13		mA_{rms}

Table 2: Current consumption

*) Measured values using RTX1090 EVK with VRF = 2.3V, VBAT = 3.9V – power source: rechargeable battery, no LED, no CODEC and DSP idling. Please note that performance data can vary depending on the application.

5.1.2 Recommended operating conditions

Parameter	Description	Min.	Typ.	Max.	Unit
V_{BAT}	Supply voltage on pin VBAT	3.1		5.0	V
V_{BUS}	Supply voltage on pin VBUS_CHARGE	4.2		5.75	V
V_{DDIO0}	Supply voltage for I/O bank	1.6		3.45	V
V_{DDIO1}	Supply voltage for I/O bank	1.6		3.45	V
V_{DDIO2}	Supply voltage for I/O bank	1.6		3.45	V
V_{RF_PA2}	Supply for RF power amplifier	0.5	3.3	4.6	V
V_{PON}	Voltage on P0_15/PON			5	V
V_{PIN_NEG}	Negative voltage on a pin	GND-0.3			V
V_{PIN_POS}	Positive voltage on a pin			VDDIO_x+0.2	V
T_A	Ambient temperature operating range	-20		60	°C
Humidity	Non-condensing	30		95	%

Table 3: Recommended operating conditions

5.1.3 DC characteristics

Parameter	Description	Min.	Typ.	Max.	Unit
$Vout_{VDD1V8}$	Output voltage for VDD_1V8	1.71	1.8	1.89	V
$Imax_{VDD1V8}$	Maximum output current for VDD_1V8[8]	100			mA
$Vout_{VDD3V3}$	Output voltage for VDD_3V3[9]	3.13	3.3	3.46	V
$Imax_{VDD3V3}$	Maximum output current for VDD_3V3[10]	100			mA
$Vout_{VSUPPLY}$	Output voltage for VSUPPLY[9]	3.28	3.45	3.62	V
$Imax_{VSUPPLY}$	Maximum output current for VSUPPLY[11]	250			mA
Icharge	Maximum current draw on VBUS for charging on VBAT[12]	360	400	460	mA

Table 4: DC characteristics

5.1.4 Common electrical specifications – GPIO pads

Parameter	Description	Conditions	Min.	Typ.	Max.	Unit
V_{IH}	High level input voltage	VDDIO_x=1.6 – 3.45V	0.7*VDDIO_x			V
V_{IL}	Low level input voltage	VDDIO_x=1.6 – 3.45V			0.3*VDDIO_x	V
V_{IH_reset}	High level for RESET inactive		0.80			V
V_{IL_reset}	Low level for RESET active				0.16	V
V_{IH_pon}	High input level for PON		0.75			V
$V_{IL\ pon}$	Low input level for PON				0.35	V

Table 5: Electrical specifications - recommended operation conditions

[8] Without subtracting current consumption from internal module usage (i.e. flash).
[9] This assumes an input voltage on VBAT/VBUS above the specified regulated voltage output (i.e. 3.3V for VDD_3V3 and 3.45V for VSUPPLY). Otherwise, the LDO internally in the module for the output will enter 'pass through' mode, and the output of the LDO will follow the supply voltage, hence losing any features inherited to regulation (i.e. PSRR). For more details see ref. 1.
[10] Without subtracting current consumption from internal module usage (e.g. VDDIO).
[11] Without subtracting current consumption from VDD_1V8 and VDD_3V3.
[12] Charge current can be adjusted in 14 intervals ranging from 5 to 400mA.

5.1.5 Electrical specifications – DC characteristics

Parameter	Description	Min.[13]	Typ.	Max.	Unit
V_{OH}	High level input voltage	0.8*VDDIO_x			V
V_{OL}	Low level input voltage			0.2*VDDIO_x	V
Total sink current of IOs	Drive strength of GPIO, dependent of VDDIO supply	3		8	mA
I_{LED}	Drive strength of LED pins with back drive protection to VSUPPLY			16	mA

Table 6: Electrical specifications - DC characteristics

5.2 Module pin specification

The pin-out specification is listed in the following table.

Pin	Port name	Function	Direction	DA14495 pin no.
A1	A1	Antenna 1	Input/output	
A3	A2	Antenna 2	Input/output	
B2	GND	GND		
B4	GND	GND		
B5	GND	GND		
B6	VRF_PA2	RF PA2 supply	Input	
B7	P2_6	GPIO LED_0	Input/output	B10
B8	GND	GND		
C1	GND	GND		
C2	GND	GND		
C3	GND	GND		
C4	P2_2	GPIO	Input/output	B8
C5	P2_3	GPIO	Input/output	B9
C6	GND	GND		
C7	GND	GND		
C8	P2_7	GPIO LED_1	Input/output	B11
D1	P2_4	GPIO	Input/output	C9
D2	P2_5	GPIO	Input/output	A10
D3	P2_0	GPIO	Input/output	B7
D4	P2_1	GPIO	Input/output	C8
D5	P2_10	GPIO	Input/output	C11
D6	P2_11	GPIO	Input/output	D11
D7	P1_5	P1_5 QSPI2_IO2	Input/output QSPI2 data I/O 2	F11
D8	GND	GND		
E1	GND	GND		
E2	P0_15	P0_15/ PON	Input	K3
E3	P0_14	P0_14/ ADC0/ NTC	Input/output Analog input	F2
E4	P2_9	GPIO	Input/output	C10
E5	GND	GND		
E6	P1_6	GPIO	Input/output	E11
E7	P1_4	P1_4 QSPI2_IO1	Input/output QSPI2 Data I/O 1	G11
E8	P2_8	GPIO LED_2	Input/output	D10

[13] VDDIO_x = 2.8V, Iout = 4mA or 8mA.

Pin	Port name	Function	Direction	DA14495 pin no.
F1	$\overline{\text{RESET}}$	Reset	Input	C2
F2	P0_13	P0_13/ ADC1/ COMP	Input Analog input	G2
F3	GND	GND		
F4	P1_9	GPIO	Input/output	L11
F5	P1_8	GPIO	Input/output	H10
F6	P1_7	GPIO	Input/output	J10
F7	P1_3	P1_3 QSPI2_CS	Input/output QSPI2 chip select	H11
F8	VDDIO_2	Supply for GPIO bank 2	Input	A9
G1	GND	GND		
G2	P0_12	P0_12/ SPDIF_IN	Input Analog input	K4
G3	P0_5	GPIO	Input/output	K5
G4	P0_10	GPIO	Input/output	K8
G5	GND	GND		
G6	GND	GND		
G7	P1_2	P1_2 QSPI2_IO3	Input/output QSPI2 Data I/O 3	H12
G8	GND	GND		
H1	P0_11	P0_11/ BXTAL	Input/output	J3
H2	P0_3	GPIO	Input/output	L3
H3	P0_2	GPIO	Input/output	L4
H4	GND	GND		
H5	P1_11	GPIO	Input/output	J11
H6	P1_10	GPIO	Input/output	K11
H7	P1_1	P1_1 QSPI2_SCK	Input/output QSPI2 clock	J12
H8	VDDIO_1	Supply for GPIO bank 1	Input	L12
J1	GND	GND		
J2	P0_1	GPIO	Input/output	L5
J3	P0_0	GPIO	Input/output	L6
J4	P0_9	GPIO	Input/output	K9
J5	P1_12	GPIO	Input/output	K10
J6	GND	GND		
J7	P1_0	P1_0 QSPI2_IO0	Input/output QSPI2 Data I/O 0	K12
J8	VDDIO_0	Supply for GPIO bank 0	Input	M9
K1	VDD_1V8	1V8 digital supply	Output	J1
K2	GND	GND		
K3	P0_4	GPIO / 32k xtal out	Input/output	L7
K4	P0_8	GPIO	Input/output	L10
K5	GND	GND		
K6	SWDIO	ARM debug (for debug purposes only)	Input/output	L8
K7	SWCLK	ARM debug (for debug purposes only)	Input	L9

Pin	Port name	Function	Direction	DA14495 pin no.
K8	GND	GND		
L1	VDD_3V3	3V3 digital supply	Output	J2
L2	SOCN	Battery fuel gage	Input	K2
L3	SOCP	Battery fuel gage	Input	L2
L4	GND	GND		
L5	P0_6	GPIO / 32k_xtal1	Input/output Analog in	M11
L6	GND	GND		
L7	P0_7	GPIO / 32k_xtal2	Input/output Analog out	M12
L8	VDD_USB	Supply to USB_LDO	Output	M6
M1	VSUPPLY	RF, LED supply	Output	K1
M2	GND	GND		
M3	VBAT	Main supply	Input	L1/M1
M4	VBUS_CHARGE	VBUS / VCHARGE	Input	M5
M5	GND	GND		
M6	USB_DM	USBN	Input/output	M7
M7	USB_DP	USBP	Input/output	M8
M8	GND	GND		

Table 7: RTX1090 pin description

Please note that several of the RTX1090 pins have multiple functions. For more information, please see ref. 1.

6 Design guidelines

The following section contains guidelines and practical advice to system designers, to obtain the best performance using the RTX1090 module.

6.1 External parts

Outside the RTX1090, a power supply and antenna circuit shall be designed. This design is the responsibility of the customer. RTX can participate in review of the carrier board design (antenna circuit, power supply, module placement, etc.) and provide the customer with suggestions and best practice advice to optimize the performance and design.

The RTX1090 features multiple applications, thus the need for external parts depends on the application. Hence, the exact needs and recommendations are application specific, thus only guidelines are provided below. It is always recommended to consult your RTX contact for the specific needs.

6.1.1 Antennas

- Well separated from other electronics and each other
- Placed in non-shielded environment
- Impedance matched in representative environment

6.1.2 Module placement on carrier board

Although the module is small, it would be beneficial to consider mechanical forces close to the module (e.g. placing a push button close to the module could cause the module soldering to break due to repeated use of the button – i.e. the mechanical force on the carrier board could cause the carrier board to bend slightly).

6.1.3 Power supply

Please refer to reference 2.

6.2 Radio performance

The radio uses RTX DECT protocol with the key parameters as defined in the table below. The parameters are verified as conducted measurements on the module antenna terminal.

No.	Item	Radio part	Specification	Comment
1	Receiver sensitivity	DECT	Maximum: TBD dBm Typically: -92.5[14] dBm	@ BER = 0.001
2	Transmit Power (NTP)	DECT	Minimum: 21 dBm Typically: 22.5 dBm[14] Maximum: 24 dBm	@ 3.1V supply Non-Zero Blind Slot
3	Temperature compensation	DECT	Minimum: 5dBm Maximum: 22.5dBm	@ -30°C to +70°C. @ 1dB power step
4	Operating Frequency Band	EU US J-DECT	1881.792MHz~ 1897.344MHz 1921.536MHz~ 1928.448MHz 1895.616MHz～1904.256MHz	

Table 8: RTX1090 key RF parameters

Note: The temperature compensation algorithm works from -30°C to +70°C in 10°C temperature steps with 1dB power tolerance. The module supports discrete power steps in 1dB from 5dBm to 22.5dBm.

[14] GFSK modulation and 50Ω impedance.

6.3 Test interface

The module has a UART test interface, which supports the RTX UART interface specification as this interface will be used during the RTX development and production. In addition to this interface, an ARM debug interface is available. This ARM debug interface will be used during development at RTX as well. For details regarding this interface, please see reference 1. The UART interface is reserved for development, verification, production test purpose, and normal UART communication. The UART interfaces is available for the application design. It is recommended to include access to the UART for monitoring and control of the application during, e.g. product approval.

The following connections will be available.

Function	Pin name
Ground	GND
UART RX	J2
UART TX	J3
ARM debug interface	K6, K7

Table 9: Test and debugging interface

7 Soldering profile

As shown below, the RTX1090 should be soldered using a standard reflow soldering profile and standard solder paste (Sn96.5 / Ag3 / Cu0.5 alloy). Solder paste supplier is Indium Corporation. Adjustments to the profile may be necessary, depending on the process requirements.

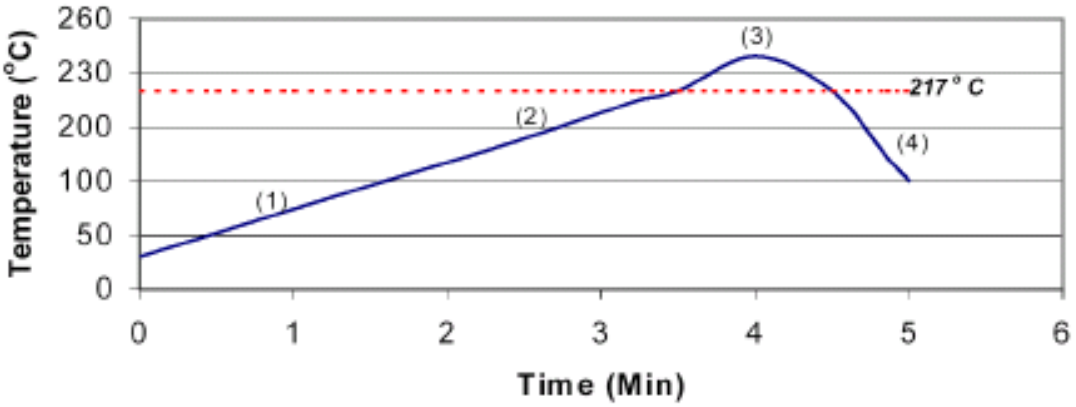

Figure 4: Solder paste composition

7.1 Preheat

The temperature rise from room temperature to 150 degrees shall be made for 30 seconds or longer - typically 90 – 120 seconds. A linear ramp rate of 0.5 – 2.0 degrees/second allows gradual evaporation of volatiles.

7.2 Soak or dry-out

When 150 degrees is reached, the temperature rises to 190 degrees with a continued linear ramp of 0.5 – 2.0 degrees/second - typically 90 – 120 seconds. This stage serves to activate the flux and stabilize the temperature across the board. The uniform heating allows a more linear ramp rate right up to liquid temperature.

7.3 Reflow

The linear ramp rate of 0.5 – 2.0 degrees/second is continued up to the point of liquidus. When liquidus is reached, the temperature should rise with about 1 - 2 degrees/second to a spike 15 - 43 degree above liquidus to form a quality solder joint. Time above liquidus should be 30 - 90 seconds to reduce excessive inter-metallic compound. Thermal damage and charring of the post-reflow residue can also result from excessive time above liquidus and/or too high a peak temperature.

7.4 Cooling

A rapid cooldown of < 4 degrees/second is desired to form a fine grain structure. Slow cooling will form a large grain structure, which typically exhibits poor fatigue resistance. If excessive cooling > 4 degrees/second is used, both the component and the solder joint can be stressed due to a high TCE mismatch. Stencil thickness of 0.150mm is recommended.

8 Packaging of module

The RTX1090 module is delivered in a tape on reel solution (see chapter 11 for details).

Module software
Production software only. Module is intended to be programmed when deployed in actual product.

Packaging material and quantity
The RTX1090 module is delivered as a tape and reel cassette with 1000 pcs. per cassette. The cassettes are sealed in an anti-static bag with an anti-moisture pad and a humidity indicator.

9 Standard and approvals

The RTX1090 is designed to meet the standards listed below when integrated in target applications. Conformance with the standards is dependent on the software application, the product type, and its application context. Therefore, please be aware that this section cannot be used as a confirmed list across all possible product use cases.

Please consult your RTX contact and align on the requirements for your specific firmware configuration.

9.1 Radio, EMC, and safety

Japan type approvals	Japan standard
Radio and EMC	ARIB STD T-101 TELEC-T254

Table 10: Japan type approvals

EU type approvals	EU standard
Radio	ETSI EN 300 406 ETSI EN 300 175
EMC	EN 301 489-6, EN 301 489-1
Safety	IEC/EN 60950-1: 2010
RoHS	2011/65/EU
SAR	EN 50385 (Confirmation Certificate or SAR Impact assessment may be enough)
Environmental	Comply with European RoHS & REACH requirements

Table 11: EU type approvals

US type approvals	US standard
Radio and EMC	FCC Part 15, subpart D. (1920 – 1930 MHz)
SAR	FCC guideline (OET bulletin 65 Suppl. C: 2001)
UL	UL94 V-0

Table 12: US type approvals

9.2 Environmental

Parameter	Requirement
Temperature	-20°C to 60°C
Humidity	30 - 95%, non-condensing

Table 13: Environmental

10 Product labeling

Figure 5: Product labeling

10.1 Serial number definition

The serial number uses the syntax ”YYWWAXXXXXX” based on the following information:

- Digit 1-4: YY = production year, WW = production week
- Digit 5: A = a (unique RTX1290 identifier)
- Digit 6-11: XXXXXX = serial number incrementing by one for each unit

Hence, from the label example above, the following information can be extracted:

- Production year = 2018
- Production week = 35
- Serial number = 000001

10.2 Barcode

ECC200 data matrix: product serial number

11 Tape and reel specification

Measurements of the tape and reel solution is provided in the figure below. The module is placed in the chambers with the shield, and the label is visible through the clear protective membrane. The module is placed in the chambers as outlined in the figure below, i.e. with the notch in the upper left corner.

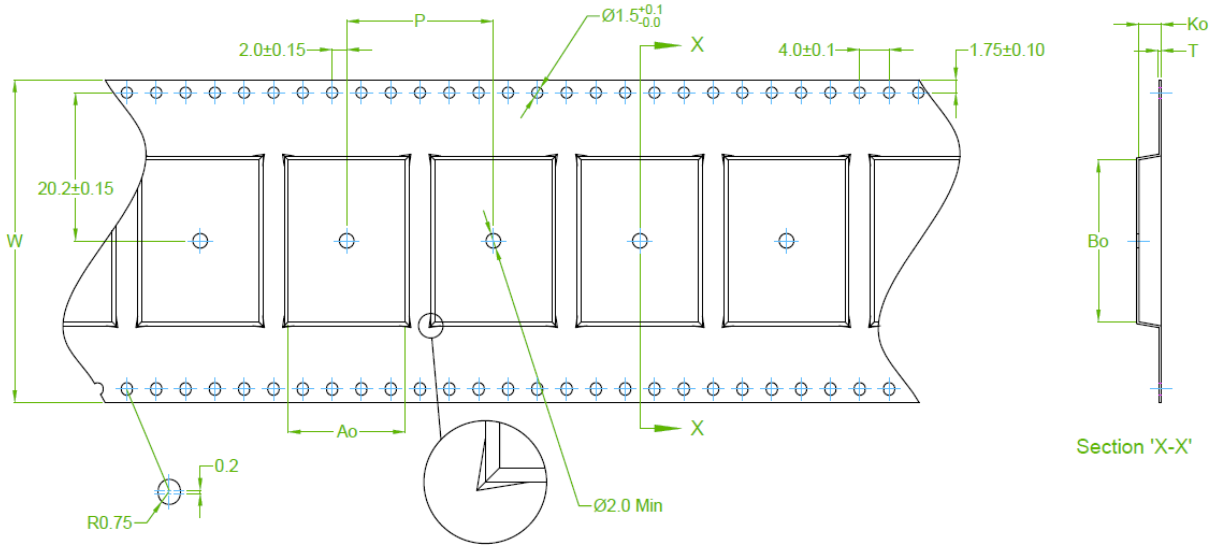

DIMENSIONS	
Ao	16.00 ±0.10
Bo	22.10 ±0.10
Ko	3.00 ±0.10
P	20.00 ±0.10
T	0.30 ±0.05
W	44.00 ±0.30

NOTES:

ALL DIMENSIONS IN MILLIMETRES
10 SPROCKET HOLE PITCH CUMULATIVE TOLERANCE ± 0.20
MATERIAL: CONDUCTIVE POLYSTYRENE
CAMBER NOT TO EXCEED 1.0mm IN 250mm

Figure 6: Tape and reel specification

FCC Statement

This device complies with part 15 of the FCC Rules. Operation is subject to the following two conditions:

(1) This device may not cause harmful interference, and

(2) this device must accept

any interference received, including interference that may cause undesired operation.

Any Changes or modifications not expressly approved by the party responsible for compliance could void the user's authority to operate the equipment.

The device has been evaluated to meet general RF exposure requirement. The device can be used in portable exposure condition without restriction.

If the FCC identification number is not visible when the module is installed inside another device, then the outside of the device into which the module is installed must also display a label referring to the enclosed module. This exterior label can use wording such as the following: "Contains Transmitter Module FCC ID: 2BFX8ZN-WW-1 Or Contains FCC ID: 2BFX8ZN-WW-1"

When the module is installed inside another device, the user manual of the host must contain below warning statements;

1. This device complies with Part 15 of the FCC Rules. Operation is subject to the following two conditions:

(1) This device may not cause harmful interference.

(2) This device must accept any interference received, including interference that may cause undesired operation.

2. Changes or modifications not expressly approved by the party responsible for compliance could void the user's authority to operate the equipment.

The devices must be installed and used in strict accordance with the manufacturer's instructions as described in the user documentation that comes with the product.

Any company of the host device which install this modular with Single modular approval should perform the test of radiated emissionand spurious emission according to FCC part 15D requirement, Only if the test result comply with FCC part 15D requirementÿthen the host can be sold legally.

KDB 996369 D03 statements

2.2 List of applicable FCC rules:

The module complies with FCC Part 15D

FCC ID: 2BFX8ZN-WW-1 on User manual and on the external of the packaging.

2.3 Summarize the specific operational use conditions

The module has been certified for Potable applications. Only installation on the holder's own products.

2.4 Limited module procedures

The module is not a limited module.

2.5 Trace antenna designs

Not applicable

2.6 RF exposure considerations

This equipment complies with FCC's RF radiation exposure limits set forth for an uncontrolled environment. The antenna(s) used for this transmitter must not be collocated or operating in conjunction with any other antenna or transmitter.

2.7 Antennas

The EUT use TWO Strip antenna, Ant 1.34dBi/Ant 2: 1.34dBi

2.8 Label and compliance information

The host system using this module, should have label in a visible area indicated the following texts: "Contains FCC ID: 2BFX8ZN-WW-1

2.9 Information on test modes and additional testing requirements

When testing host product, the host manufacture should follow FCC KDB Publication 996369 D04 Module Integration Guide for testing the host products. The host manufacturer may operate their

for testing does not work, then the host product manufacturer should coordinate with the module manufacturer for access to test mode software.

2.10 Additional testing, Part 15 Subpart B disclaimer

the grantee is responsible for compliance to any other FCC rules and notice that the final host should be required part 15 subpart B testing when the modular transmitter installed, when it also contains unintentional-radiator digital circuity.