STEP 2: Adjusting the Cushioned Seat Slide

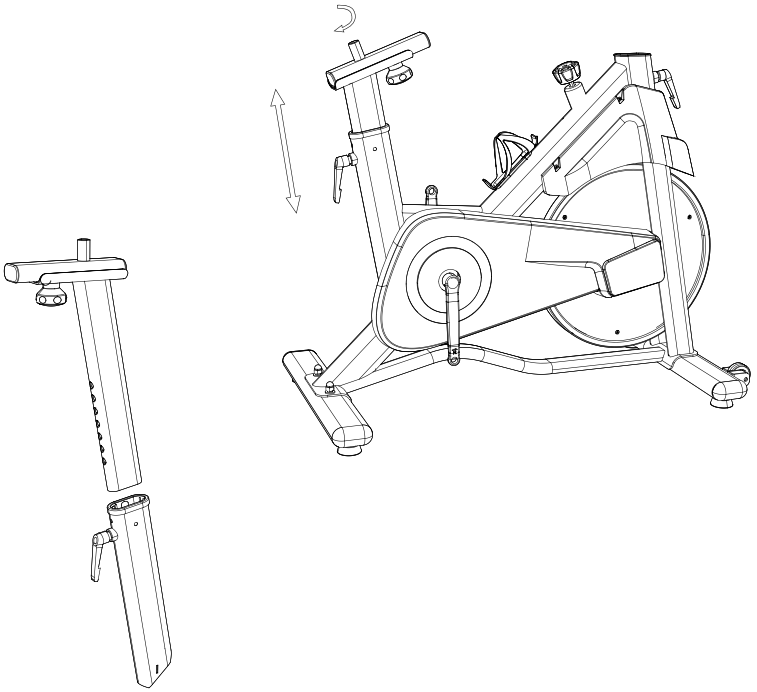

Installation Tools	None
Installation Standard Parts	None
Installing Instructions	Turn the knob anticlockwise out of the pull pin(first picture), take out the cushioned seat slide to rotate the direction as shown in the figure. Then insert the cushioned seat slide(second picture), adjust the appropriate height and finally tighten the knob. **Note: Before installing the cushioned seat slide, the cushion slide adjustment knob and seat tube adjustment knob need to be on the same side(shown as the second picture)**

STEP 3: Installation of the Cushioned Seat

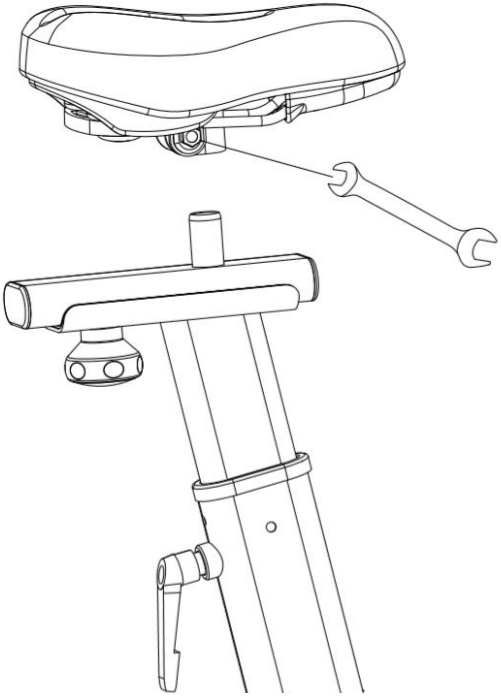

Installation Tools	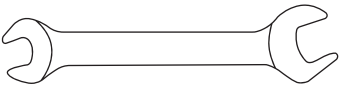 13-15mm
Installation Standard Parts	None
Installing Instructions	1. Take out the cushion seat and put its mouth to the cushion seat reinforcement. 2. After adjusting the angle of the cushion seat, use the open-end spanner to lock the hexagonal nuts on both sides of the seat.

STEP 4: Installation of the Handlebar Slide

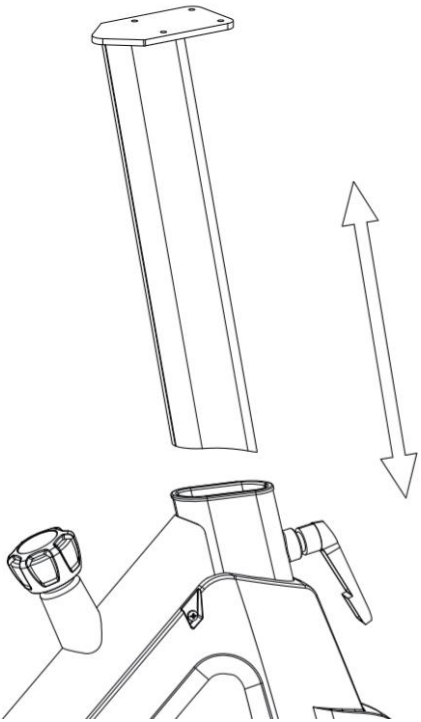

Installation Tools	None
Installation Standard Parts	None
Installing Instructions	Take out the handlebar slide, next turn the plum knob out anticlockwise. Then insert the slide and adjust to suitable height, finally tighten the knob.

STEP 5: Installation of the Handlebar

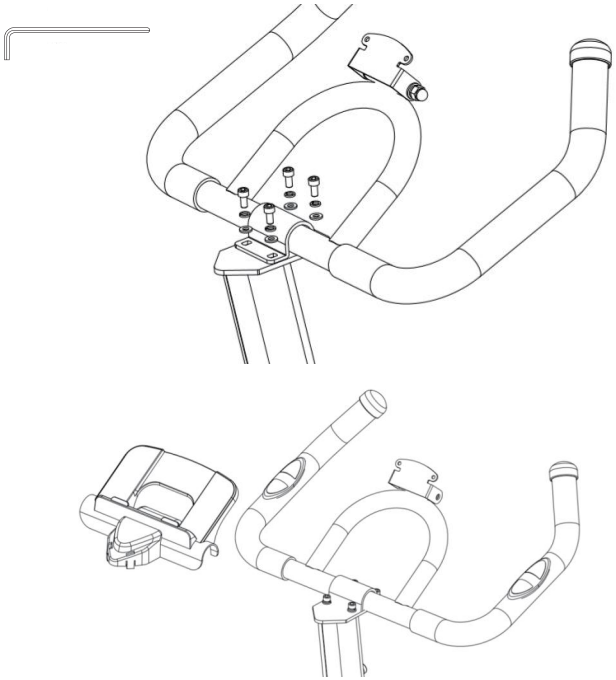

Installation Tools	5mm		
Installation Standard Parts	M8X12 4PCS	M8 4PCS	M8 4PCS
Installing Instructions	Take out the handlebar, align the holes at the slide, then use the screws to align the screw holes at the handlebar, finally use a spanner to lock and fix them respectively. **NOTE: During operation, the spring washers(B) are placed above the plain washers(C). Once the screws are in place, please snap the handlebar cover(8) on top of the screws.**		

STEP 6: Installation of the Electronic Watch

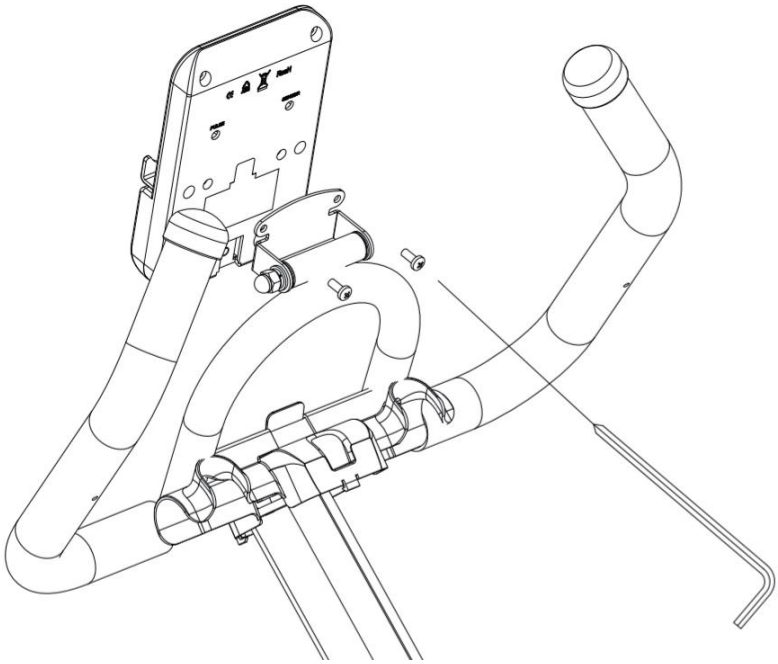

Installation Tools	6mm
Installation Standard Parts	None
Installing Instructions	Take out the screws at the electronic watch, align the holes at the electronic watch as shown in the picture, then fix it with hexagonal socket spanner.

STEP 7: Installation of the Pedals

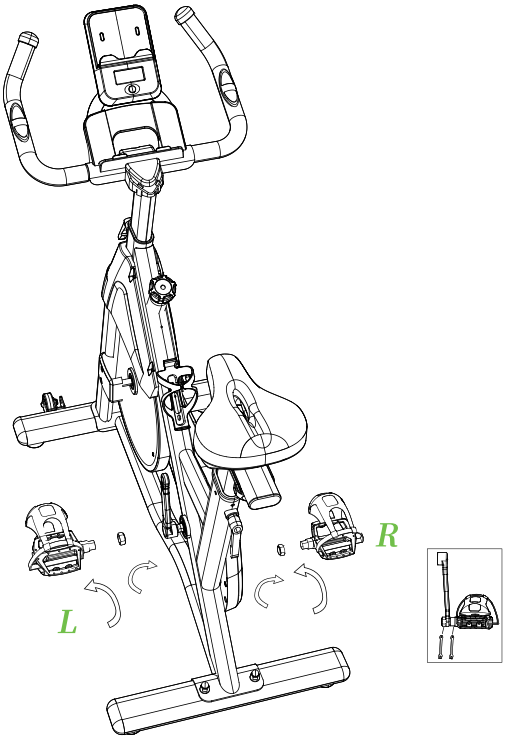

Installation Tools	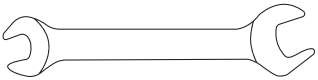 13-15mm
Installation Standard Parts	None
Installing Instructions	1. Take out the foot pedal marked with "R", then put it into the right crank threaded hole, turn it clockwise until it can't be turned, and then lock it with our special open-end spanner. 2. Take out the "L" foot pedal, put it into the threaded hole of the left crank, turn it anticlockwise until it can't be turned, and then lock it with our special open-end wrench. **Note: The crank is also marked with "L" and "R" corresponding to the markings on the foot pedal, if installed in reverse, it may lead to crank slippage and damage to the product. The foot pedal must be locked, otherwise the pedal may fall off after a period time.**

Instructions for Product Use

Adequate warm-up before exercise can not be missing, can be like jogging, squatting, high leg, leg press, twisting, moving arms. And other activities, so that the body sweats slightly heat, usually in 5-10 minutes.

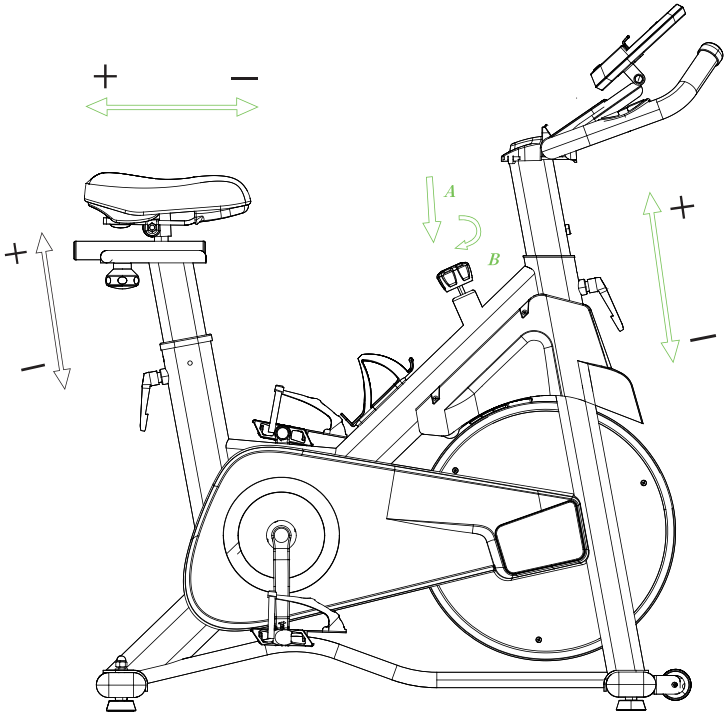

1. When you need to make an emergency stop, please press the resistance knob down until the flywheel stops rotating.
2. Tighten the stabilizer foot when the frame is not level.
3. When using the exercise bike, please put your feet into the center of pedal. And your leg should be slightly bent at the knee.
4. If your legs are too straight or your feet cannot touch the pedals, adjust the seat tube down. If your leg is bent too much, please adjust the seat up.
5. Before adjusting the seat, step off the bike and loosen and pull the seat tube adjustment knob. Adjust the seat to the suitable height. Loosen the adjustment knob to engage the locking pin. Ensure that the pin is fully engaged and fully tightened and screwed down
6. Loosen the locking bolt, you can move the cushion slide back and forth, adjust to a comfortable position, then lock the bolt.

Troubleshooting

Condition/Problem	Things to Check	Solution
Electronic watch will not turn on/start	Batteries	Make sure batteries are installed correctly. If batteries are correctly installed,please replace with a set of new batteries.
Electronic watch shuts off while in use/ No data displayed on electric watch	Check data cable integrity	All wires in cable should be intact. If any cable are cut or crimped,please replace it.
	Check data cable connections	Be sure cable is connected securely.
	Check magnet position (requires chain guard door removal)	Magnet should be in place on sprocket drive.
Bike rocks/does not sit level	Check stabilizer foot	Stabilizer foot may be turned in or out to level bike.
	Check surface under unit	Adjustment may not be able to compensate for extremely uneven surfaces. Move bike to level area.
Pedals loose	Check pedal to crank connection	Crank should be tightened securely to axle.
	Check crank to axle connection	Remove pedals. Make sure there is no debris on threads, and the reinstall the pedals.
Noise occurred when pedaling/unit difficult to pedal	Check pedal to crank connection	Please contact customer service for operating video
	Check chain tension (requires chain guard door removal)	Open chain guard door to see the chain. Tension should not be too loose(nor too tight).
Seat post movement	Check locking pin	Be sure adjustment pin is locked into one of the seat post adjustment holes.
	Check adjustment knob	Be sure knob is securely tightened.

Warranty

MANUFACTURER'S LIMITED WARRANTY

LABGREY warrants to the original purchaser that this product is free from defects in material and workmanship when used for its intended purpose, under the conditions that it has been installed and operated in accordance with the User Manual. LABGREY's obligation under this warranty applies to the following:

COMPONENT LENGTH OF WARRANTY

Structural Frame 1 year (For Home Use Only)

All Other Components 270 days (For Home Use Only)

EXCLUSIONS FROM WARRANTY COVERAGE:

LABGREY does not warrant against, and is not responsible for, any product failure, malfunction, or damages attributable to:

1. Improper installation and/or failure to abide by LABGREY's installation guidelines.
2. Use of this product beyond normal home use or in an application for which it was not designed.
3. Cosmetic items such as scratches, dents, or discolorations.
4. Improper operation, alteration, handling, storage, abuse, or neglect of the products.

LABGREY, at its sole discretion, will either repair or replace, free of charge, any part(s) proven to be defective under normal home use. This warranty is offered only to the original purchaser and is not transferable. Proof of the original purchase is required.

Replacement parts can be ordered by emailing our customer service department at **LABGREY@outlook.com.**

When ordering replacement parts, please have the following information ready:

Order Number

Description of Parts (Adding photos or videos would be helpful)

Part Number

Date of Purchase

FCC WARNING

This device complies with part 15 of the FCC Rules. Operation is subject to the following two conditions: (1) this device may not cause harmful interference, and (2) this device must accept any interference received, including interference that may cause undesired operation.

Any changes or modifications not expressly approved by the party responsible for compliance could void the user's authority to operate the equipment.

NOTE: This equipment has been tested and found to comply with the limits for a Class B digital device, pursuant to Part 15 of the FCC Rules. These limits are designed to provide reasonable protection against harmful interference in a residential installation. This equipment generates, uses and can radiate radio frequency energy and, if not installed and used in accordance with the instructions, may cause harmful interference to radio communications. However, there is no guarantee that interference will not occur in a particular installation.

If this equipment does cause harmful interference to radio or television reception, which can be determined by turning the equipment off and on, the user is encouraged to try to correct the interference by one or more of the following measures:

-- Reorient or relocate the receiving antenna.

-- Increase the separation between the equipment and receiver.

-- Connect the equipment into an outlet on a circuit different from that to which the receiver is connected.

-- Consult the dealer or an experienced radio/TV technician for help.

To maintain compliance with FCC’s RF Exposure guidelines, This equipment should be installed and operated with minimum distance between 20cm the radiator your body: Use only the supplied antenna.

IC Caution:

This device complies with Industry Canada's licence-exempt RSSs. Operation is subject to the following two conditions:
(1) This device may not cause interference; and
(2) This device must accept any interference, including interference that may cause undesired operation of the device.

To maintain compliance with RF exposure guidelines, this equipment should be installed and operated with a minimum distance of 20cm between the radiator and your body.

Le présent appareil est conforme aux CNR d'Industrie Canada applicables aux apparei ls radio exempts de licence. L'exploitation est autorisée aux deux conditions suivantes:
(1) l'appareil ne doit pas produire de brouillage, et
(2) l'utilisateur de l'appareil doit accepter tout brouillage radioélectrique subi, même si le brouillage est susceptible d'en compromettre le fonctionnement.

Pour maintenir la conformité aux directives d'exposition aux radiofréquences, cet équipement doit être installé et utilisé avec une distance minimale de 20 cm entre le radiateur et votre corps.