MAX PHOTONICS

MFSC 6000X(G6.1) CW Fiber Laser Series

USER GUIDE

Maxphotonics Co.,Ltd.

Copyright Notation

Copyright © Maxphotonics Co ., Ltd (here after referred to as Maxphotonics). All rights reserved. You may not copy, modify, transmit or publish this publication, in any form, in any media or by any means, without the prior written permission of Maxphotonics, except as allowed under applicable copyright laws. Permitted copies shall bear the same copyright and proprietary notices that were contained on the ori ginal version.

Maxphotonics believes that the information provided is accurate and reliable; however Maxphotonics makes no warranty, representation,expression or implication that this document can be used as reference in other occasions. Furthermore, Maxphotonics does not assume responsibility for any infringement of patents or other rights of third parties due to use of the information contained in this document. Maxphotonics shall not be liable for errors contained in this document or for direct or indirect damages of relevant equipment.

Maxphotonics and the Maxphotonics Logo are registered trademarks of Maxphotonics Co., Ltd., and the Logo does not break any regulations of Trademark law.Maxphotonics grants no rights for patent or other intellectual property mentioned herein.

All information contained in this document is subject to change and revision without notice.

Maxphotonics Co.,Ltd.
Address: Maxphotonics Industrial Park, 3rd Furong Road,
Furong Industrial Area, Shajing, Baoan, Shenzhen, China.518125
E-Mail: info@maxphotonics.com
http://en.maxphotonics.com

Subject to change without notice. © Maxphotonics Co., Ltd.

Preface

Thank you for using the MFSC 6000X(G6.1) CW Fiber Laser Series from Maxphotonics. We compile this document for you in order that the laser is used and maintained properly. Due to the limited level of the writers, coupled with time constraints, there are some careless mistakes in this document, your understanding and suggestion to help us make an improvement will be much appreciated . Thank you again for using Maxphotonics' products.

Please take time to read and understand this User's Guide and familiarize yourself with the operating and maintenance instructions before you use the product. We strongly recommend that the operator read the Section 2 titled “Safety Information” prior to operating the product.

This User's Guide should stay with the product to provide you and all future users and owners of the product with important operating, safety and other information.

We identify the parts to which you need to pay special attention in the document with underscore. Please notice those information to prevent the unnecessary damages.

Company Profile

Found in 2004, Maxphotonics is one of the first fiber laser manufacturers in China. It is also the first in China to realize independent intellectual property rights and vertical integration in the core technologies of fiber lasers and optical devices. One of the national high-tech enterprises. Maxphotonics has developed into an internationally renowned laser manufacturer that develops, manufactures and sells fiber lasers and core optical components. It is the second largest domestic fiber laser manufacturer in the domestic market.

Maxphotonics specializes in the research, development, production and sales of fiber lasers, including pulsed fiber lasers, continuous fiber lasers and direct diode lasers. It also implements pump sources, combiners, fiber gratings, isolators, laser output heads, and stripping. Optical devices such as molds, acousto-optic modulators, and pattern matchers are produced autonomously. Products are widely used in marking, engraving, cutting, drilling, cladding, welding, surface treatment, rapid prototyping and additive manufacturing processes.

More informations，please visit our website：

http://en.maxphotonics.com

Company Profile **2**

Chapter 1 Characteristic Description **5**

Chapter 2 General Safety Information **6**

1-Safety Conventions 6

2-Laser Protection 8

3-Reference Standard 9

4-General Safety Instructions 10

5-Additional Safety Information 15

Chapter 3 Product Description **16**

1-Features 16

2-Module Configuration 16

3-Laser Model Designation Codes 17

4-Certification 17

5-Front Panel Description 17

6-Back Panel Description 17

7-Optical Output Terminal 18

Chapter 4 Specification **20**

1-Optical Characteristic Parameters 20

2-General Characteristic Parameters 21

3-Water Cooling Condition 21

4-QBH Water Cooling Condition 22

5-Installation Environment Requirements 23

6-Structural Layout 25

Chapter 5 Unpacking Guide 27

1-Unpacking Steps 27

2-Packing List 29

Chapter 6 Operation Guide..... 30

1-Notice 30

2-Electrical Power Connection 30

3-Extension Interface 30

4-Start Steps..... 34

5-Mode Description 35

6-Software Description 36

7-Error List 39

Chapter 7 Fiber Connector Inspection and Cleaning Guide..... 40

1-Notice 40

2-Operating Procedures..... 41

Chapter 8 Service and Maintenance 45

1-Maintenance Notes 45

2-Service Statements 46

Chapter 9 Warranty Statements 47

1-General Items 47

2-Warranty Limitations 47

Chapter 1
Characteristic Explain

MFSC Series CW Fiber Laser products provide a wide range of wavelength from 1060nm to 1100nm.The lasers are water-cooled and maintenance-free and with a wall plug efficiency of more than 30% and deliver high efficiency, high reliability and high performance.

Maxphotonics' MFSC Series CW Fiber Laser Series are Class 4 laser products and are designed and tested with safety. By following this User Guide and applying sound laser safety practices, it will be a safe and reliable device.

Laser light exhibits unique characteristics that may pose safety hazards. Therefore, the laser light can’t be normally associated with other light sources, and all operators and people near the laser must be aware of these special hazards.

In order to ensure the safe operation and optimal performance of the product, please follow all warnings and safety instructions in this guide during process of operation, maintenance and service.

For ensuring the safety of operators, operators are urged not to open the equipment privately at all times. There are no user serviceable parts, equipment or assemblies associated with this product. Lasers of unauthorized disassembly shall not be subject to warranty.

Chapter 2
General Safety Information

1-Safety Conventions

All safety warning symbols during operating process of the laser include:

SYMBOLS	DESCRIPTION
	WARNING: Refers to a potential Electrical Hazard to human body. It requires a procedure that, if not correctly followed, may result in bodily harm to you and/or others. Do not proceed beyond the WARNING sign until you completely understand and meet the required conditions.
	CAUTION：Refers to a potential hazard on product. It requires a procedure that, if not correctly followed, may result in damage to the product or components. In order to ensure normal use of equipment, do not violate the requirement of the CAUTION sign.
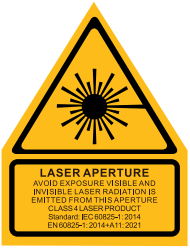	WARNING:Refers to a potential Laser Hazard.The symbol represents laser radiation. The symbol is pasted on laser output end.
	CAUTION: The symbol contains details on laser power output and wavelength; reminds users to avoid direct or scattered radiation exposure to eyes or skin.

NO SYMBOL	IMPORTANT：Refers to any information regarding the operation of the product. Please do not overlook this information.

NOTE :

◎ This device is classified as a high power Class IV laser instrument. It may emit up to 6KW average power from 1060nm to 1100nm. This level of light may cause damage to the eye and skin. Despite the radiation being invisible, the beam may cause irreversible damage to the retina. Laser safety eyewear is not provided with this instrument, but must be worn at all times while the laser is operational.

FCC ID: 2BG366000XG61

The module in this product is labeled with its own FCC ID. The FCC ID is not visible when the module is installed inside another device. Therefore, the outside of the device into which the module is installed must also display a label referring to the module. The final end device must be labeled in a visible area with the following.

CAUTION: The user is cautioned that changes or modifications not expressly approved by the party responsible for compliance could void the user's authority to operate the equipment.

This device complies with Part 15 of the FCC Rules. Operation is subject to the following two conditions: (1) this device may not cause harmful interference, and (2) this device must accept any interference received, including interference that may cause undesired operation.

NOTE:

This equipment has been tested and found to comply with the limits for a Class A digital device, pursuant to part 15 of the FCC Rules. These limits are designed to provide reasonable protection against harmful interference when the

equipment is operated in a commercial environment. This equipment generates, uses, and can radiate radio frequency energy and, if not installed and used in accordance with the instruction manual, may cause harmful interference to radio communications. Operation of this equipment in a residential area is likely to cause harmful interference in which case the user will be required to correct the interference at his own expense.

FCC Radiation Exposure Statement:

This equipment complies with FCC radiation exposure limits set forth for an uncontrolled environment. This equipment should be installed and operated with a minimum distance of 20cm between the radiator and your body.

This transmitter must not be co-located or operating in conjunction with any other antenna or transmitter.

2-Laser Protection

1、Laser Protection Requirements

You must wear the safety protective glasses while operating the laser, and rationally select the safety protective glasses according to the lasing wavelength of the laser. If the device is a tunable laser or Raman product, it emits light over a range of wavelengths and the end user should confirm the laser safety eyewear used protects against light emitted by the device over its entire range of wavelength.

2、Laser Protective Equipment Suppliers

Maxphotonics recommends material or equipments provided by following laser protective equipment suppliers for you, including LaserVision USA, Kentek Corporation, Rochwell Laser Industries, etc. All the supplier information is provided by Maxphotonics only for the convenience to use, so Maxphotonics assumes no responsibility for any problem caused by using the products of abovementioned suppliers.

3-Reference Standard

Electromagnetic Compatibility Emission:

EN IEC 61000-6-4:2019

CISPR 16-2-1

CISPR 16-2-3

Anti-interference Performance on Electromagnetic Compatibility:

EN IEC 61000-6-2:2019

EN 61000-4-2:2009

EN 61000-4-3:2020

EN 61000-4-4:2012

EN 61000-4-5:2014+A1:2017

EN 61000-4-6:2014

EN 61000-4-11:2020

4-General Safety Instructions

1、Specular Reflection

There are often numerous secondary laser beams produced at various angles in the output port of the laser. These divergent beams are produced when the primary beam of laser reflects off a smooth surface, and they are called specular reflections. Although these secondary beams may be less powerful than the total power emitted from the primary beam, the intensity may be great enough to cause damage to the eyes and skin as well as surface of materials.

WARNING:

◎ You must exercise caution to avoid/minimize specular reflections as these laser radiations are invisible!

2、Safety Instructions of Accessories

The photosensitive elements integrated in laser-related optical accessories may be damaged by laser exposure, such as video cameras, photomultiplier tubes, and photodiodes. Attention should be paid to related device protection.

WARNING :

◎ The Maxphotonics MFSC laser light is strong enough to cut or weld metal, burn skin, clothing and paint. In addition, this light can ignite volatile substances such as alcohol, gasoline, ether and other solvents. During the operating process, the flammable materials around the laser must be isolated.

3、Optical Operating Instructions

We strongly recommend that you read the following procedures before operating the laser:

1、Never look directly into the laser output port when the power is turned on.

2、Avoid positioning the laser and all optical output components at eye level.

3、Equip with laser beam casing.

4、4. Make sure to remove the tail cover of the laser output head before the laser is turned on, otherwise it will cause irreversible damage to the laser fiber output head.

5、Ensure that all personal protective equipment is suitable for the output power and wavelength range of the laser.

6、Use the laser in a room with access controlled by door interlocks. Post warning signs. Limit the safety areas to operate the laser.

7、Please do not operate the laser in darkened environments.

8、Do not turn on the laser without an optical coupling fiber or an optical output connector.

9、Carry out commissioning, calibration and focusing at low output power and then increase the output power gradually when the calibrating and focusing work is done.

10、Do not install or detach cutting heads or collimators when the laser is active

11、Make sure that the laser is shut down and the power is off before you install or detach cutting heads or collimators.

12、If the equipment is operated in a manner not specified in this document, the protection devices and performance of the equipment may be impaired and the warranty will be voided.

CAUTION:

◎ The output of the laser is delivered through a lens with an anti-reflection coating. If the backward-stage light path of your laser has the optical lens, please strictly inspect the lens of the output head and the backward-stage lens

of the laser, and ensure that there is no dust and any other impurity on the lens. Please note that any macroscopic attachment may cause extreme damage to lens or burn the laser or any backward-stage light path equipment.

◎ For cleaning instructions of the lens, please refer to the "Optical Fiber Connector Inspection and Cleaning Guide".

◎ Hot or molten pieces of metal may be produced when the laser is under operation. Exercise caution if debris is produced in operation.

◎ When you carry out commissioning and calibration of the laser output, you must set the laser output at low power level and then gradually increase the output power during checking the quality of the light spot emitted from the laser via an infrared viewer.

WARNING:

◎ Make sure that the individual protective equipment meets the output power and wavelength range of the laser.

◎ Never look directly into the optical fiber or the collimator, and make sure you wear the safety protective glasses in each operation.

4、Electrical Operating Instructions

We strongly recommend that you read the following procedures before operating the laser:

1、Make sure the shell of this equipment is properly grounded. Any interruption of the ground loop may result in personal injury.

2、Make sure the power source connecting equipment is properly grounded.

3、In order to further reduce fire hazard, replace the line fuses (if applicable) with the same types and ratings. The use of other fuses or material is prohibited.

4、In order to prevent the risk of personal injury, it is necessary to install a leakage protection power switch with a load current of not less than 63A outside the laser.

5、Make sure that the input AC voltage of the laser is the voltage of the normal AC mains (Three-phase four-wire 360-440VAC), and wires are connected accurately. Any incorrect wiring method may cause damage to people or instrument.

6、The equipment does not have any part which can be maintained by operators, and all the maintenance operations must be finished by the professionals of Maxphotonics Co., Ltd.

7、To prevent electrical shock, do not remove enclosure, detach the laser without permission and damage the relevant signs. Any product with unauthorized dismounting shall not be subject to warranty.

WARNING:

◎ The input voltage of the laser is triple-phase AC current (360-440VAC), which may cause risk of electric shock. All the relevant cables and connection wires have potential hazards.

5.Environment Conditions and Precautions

For ensuring the safety of the laser working area, suitable enclosures shall be applied, including but not limited the laser safety signs and the interlocking devices. Corresponding operators must be trained and examined and know the normal safety specifications for operating the laser.

Meanwhile, it is important that the output components shall not be installed at eye level. Because of interaction of the laser and the metal material, the radiation of high-level ultraviolet light or visible light may be produced. Make sure that the laser is provided with the protective cover to prevent the eyes or other parts of human bodies from damage by radiation.

We recommend that you comply with the following operating measures to prolong the service life of the laser:

(1) Please ensure that the working area is properly ventilated and the laser is placed in a cabinet with temperature and humidity control and dustproof function. Do not expose the laser to high temperature and high humidity.

(2) Operating the equipment at high temperatures accelerates aging, increases current thresholds, and reduces laser sensitivity and conversion efficiency. If the device is overheated, please stop using it and ask for help from Chuangxin Laser.

Caution:

◎ Please operate the equipment carefully to avoid accidental damage to the equipment.

◎ If the laser is placed in an environment below 0 °C, be sure to add the corresponding antifreeze to the water cooler. If the machine is not used for a long time, be sure to drain the water in the water inlet and outlet (high-pressure air gun is recommended) to prevent the residual water from freezing and damaging the water-passing device.If the ice causes the water pipe to break, there will be a risk of leakage during the re-transmission of water and electricity, or even more serious personal injury.

5-Additional Safety Information

For additional information regarding Laser Safety, please refer to the list below:

Laser Institute of America(LIA)

13501 Ingenuity Drive, Suite 128

Orlando,Florida 32826

Phone:407 380 1553,Fax: 407 380 5588

Toll Free:1 800 34 LASER

American National Standards Institute

ANSI Z136.1, American National Standard for the Safe Use of Lasers

(Available through LIA)

International Electro-technical Commission

IEC 60825-1,Edition 1.2

Center for Devices and Radiological Health

21 CFR 1040.10 - Performance Standards for Light-Emitting Products

US Department of Labor - OSHA

Publication 8-1.7 - Guidelines for Laser Safety and Hazard Assessment.

Laser Safety Equipment

Laurin Publishing

Laser safety equipment and Buyer’s Guides

Chapter 3
Product Description

1-Features

MFSC Series CW fiber lasers are compact and efficient and high-quality laser output lasers developed for industrial application. They are mainly applied to the fields of puching, welding, cutting, etc.

Main Features:

1、High-quality laser output

2、High power, high efficiency

3、High reliability, long service life

4、Compact, rugged package

5、Extension programming interface

Applications:

1、Industrial applications

2、Scientific research

2-Module Configuration

Maxphotonics offers many configurable modes. This manual will give complete instructions for all modes, please refer to section 6.3-6.6.

3-Laser Model Designation Codes

M - F - S - C - XXX - XX 1 - 2 - 3 - 4 - 5 - 6		
1	Manufacturer's code	M means Maxphotonics
2	Gain media of the laser	F means Fiber Laser
3	Laser mode	S means Single Mode
4	Laser state	C means Continue Wave
5	Maximum output power	XXXX W means the maximum output power of the laser
6	Additional message	Can be null

4 - Certification

Maxphotonics certifies that this equipment has been thoroughly tested and inspected and meets published specifications prior to shipping. Upon receiving your equipment, check whether the packaging and accessories have been damaged in transit. If damage is apparent, please contact Maxphotonics immediately.

5- Front Panel Description

6-Back Panel Description

ITEMS	FUNCTION DESCRIPTION
CTRL	External control interface of laser
ETHERNET	Communication interface
AC380V	360-440VAC AC power input
WATER OUT	Laser water cooled outlet (1 inch)
WATER IN	Laser water cooled intake (1 inch)

7-Optical Output Terminal

1、Optical Output Head

The optical output head come with a protective window that can be replaced if damaged. Make sure that the end cap of the QBH head is removed prior to use and is usually arranged with the laser.

Please refer to “Fiber Connector Inspection and Cleaning Guide” about the cleaning method.

Optical Output Head (G4.3 QBH head)

Optical Output Head (G5 QBH head)

Chapter 4
Specification

1-Optical Characteristic Parameters

No.	Characteristics	Test Conditions	Min.	Nom.	Max.	Unit
1	Operation Mode	CW/Modulated				
2	Polarization	Random				
3	Output Power of MFSC-6000X(G6.1)	100% CW		6000		W
4	Tuning Range of Output Power		10		100	%
5	Emission Wavelength	100% CW	1070	1080	1090	nm
6	Spectrum Width(3dB)	100% CW		4	7	nm
7	Short-term Power Instability	100% CW >1h		±1	±2	%
8	Long-term Power Instability	100% CW >24h		±3	±5	%
9	Beam Quality （BPP）	100% Output 100um QBH	3.0		3.8	mm x mrad
10	Laser Switching ON Time	10%→90% Output		50	100	μs
11	Laser Switching OFF Time	90%→10% Output		50	100	μs
12	Modulation Rate	100% Output			20	KHz
13	Red Guide Laser Power	100% Output	200			μW
14	Feeding Fiber Cable Length			20		m
15	Feeding Fiber Core Size	100（150/200 optional）				μm
16	Feeding Fiber Cable Bending Radius		200			mm
17	Output Connector	Standard QBH（LOC）				

2-General Characteristic Parameters

No.	Characteristics	Test Conditions	Min.	Nom.	Max.	Unit
1	Operating Voltage		360	400	440	VAC
2	Input PowerMFSC-6000X(G6.1)	100% Output			20	KW
3	Operating Ambient Temperature		10		40	°C
4	Operating Ambient Relative Humidity		10		85	%
5	Cooling Method	Water-cooling				
6	Storage Temperature		-10		60	°C
7	Dimensions	420*855.5*115(W*D*H)				mm
8	Weight	56±5				kg

3-Water Cooling Condition

No.	Characteristics	Min.		Unit
1	Cooling Method	Water Cooling		
2	Chiller Set Temperature	Summer 24	Winter 20	°C
		Add antifreeze condition, water cooling temperature 18		
3	Hydraulic pressure	≥ 5		bar
4	MFSC-6000X(G6.1) water flow requirements	≥ 50		L/min
5	MFSC-6000X(G6.1) Chiller rated cooling capacity requirements	14		kw

CAUTION :

◎ The cooling capacity of the chiller shall meet the requirements in the table above under the working conditions of ring temperature of 40°C and outlet temperature of 22+2°C(18°C when antifreeze is added).

◎ The above recommended water pressure requires the pressure drop of the main line Δp ≤ 0.5bar. If this value is exceeded, the main circuit water pressure should be increased accordingly.

◎ Cooling water and filter element, need to be replaced once a month; Winter (refers to the low temperature environment of 0 ° C and below) before the coming of the cooling water should be replaced with a volume ratio of 20% glycol solution (recommended brand Klein), and every two months, it is strictly prohibited to add excessive, low thermal conductivity of antifreeze, excessive addition is easy to cause poor heat dissipation. After the end of winter, it is necessary to replace the antifreeze back to distilled water and replace the filter element, and restore the maintenance frequency of once a month.

◎ When the ambient temperature of the equipment is lower than -15C, the water cooler with double system function must be used, and the cooling system must run uninterrupted.

4-QBH Water Cooling Condition

Cooling Method	Water pipe size requirement	Water Flow Rate (L/min)	Hydraulic pressure (bar)	Cooling Temperature (°C)
Water cooling	Outer diameter* inner diameter=Φ6*Φ4	≥2	≥3	28-30

NOTE:

◎ External light path tube inner diameter ≥ 8mm, length ≤ 20m;

◎ The length of the Φ6 pipe connected to the LOE after switching from the external light path is ≤ 1m;

◎ QBH is connected in series with the cutting head;

◎ The above recommended external light path water pressure requires the pressure drop of the cutting head Δp ≤ 1.5bar. If this value is exceeded, the external light path water pressure should be increased accordingly.

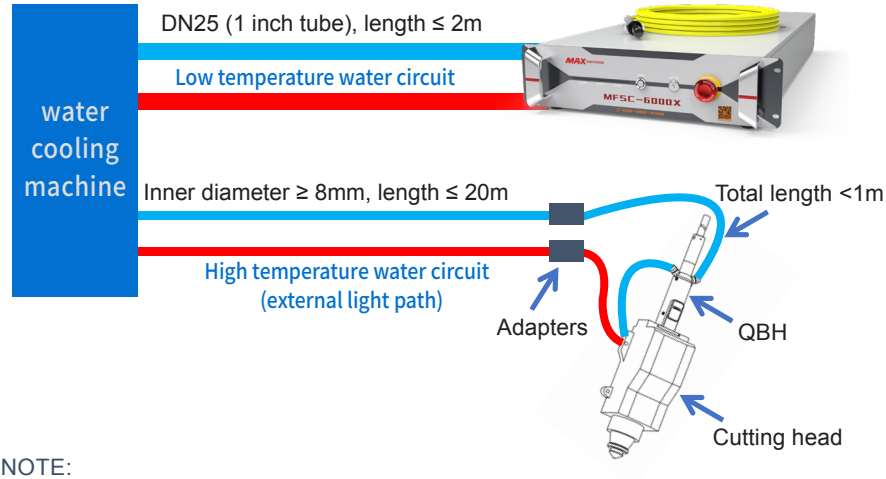

NOTE:

◎ Water pipe color: blue input water, red return water.

5-Installation Environment Requirements

1.The ambient air cleanliness grade requirement for optical fiber output head installation: 1000 or more stringent grade. Suggestions for Configuration of Standard Purification Workbench;

2.laser working environment temperature:10°C–40°C;

3.laser working environment humidity:10%-85%;

4.Avoid the condensation environment,the specific control standards are as follows:

Ambient Temperature, Relative Humidity, Dew Point Comparison Table

Relative Humidity%	30	35	40	45	50	55	60	65	70	75	80	85	90	95
Ambient Temperature (℃)	Dew point Td(℃)													
10	-7.0	-5.0	-3.0	-1.3	00	1.5	2.5	3.6	4.8	5.8	6.7	7.6	8.4	9.2
11	-6.5	-4.0	-2.0	-0.5	1.0	2.5	3.5	4.8	5.8	6.7	7.7	8.6	9.4	10.2
12	-5.0	-3.0	-1.0	0.5	2.0	3.3	4.4	5.5	6.7	7.7	8.7	9.5	10.9	11.2
13	-4.5	-2.0	-0.2	1.4	2.8	4.1	5.3	6.6	7.7	8.7	9.6	10.5	11.4	12.2
14	-3.2	-1.0	0.7	2.2	3.5	5.1	6.4	7.5	8.6	9.6	10.6	11.5	12.4	13.2
15	-2.3	-0.3	1.5	3.1	4.6	6.0	7.3	8.4	9.6	10.6	11.6	12.5	13.4	14.2
16	-1.3	0.5	2.4	4.0	5.6	7.0	8.3	9.5	10.6	11.6	12.6	13.4	14.3	15.2
17	-0.5	1.5	3.2	5.0	6.5	8.0	9.2	10.2	11.5	12.5	13.5	14.5	15.3	16.2
18	0.2	2.3	4.0	5.8	7.4	9.0	10.2	11.3	12.5	13.5	14.5	15.4	16.4	17.2
19	1.0	3.2	5.0	7.2	8.4	9.8	11.0	12.2	13.4	14.5	15.4	16.5	17.3	18.2
20	2.0	4.0	6.0	7.8	9.4	10.7	12.0	13.2	14.4	15.4	16.5	17.4	18.3	19.2
21	2.8	5.0	7.0	8.6	10.2	11.0	12.9	14.2	15.3	16.4	17.4	18.4	19.3	20.2
22	3.5	5.8	7.8	9.5	11.0	12.5	13.8	15.2	16.3	17.3	18.4	19.4	20.3	21.2
23	4.4	6.8	8.7	10.4	12.0	13.5	14.8	16.2	17.3	18.4	19.4	20.4	21.3	22.2
24	5.3	7.7	9.7	11.4	13.0	14.5	15.8	17.0	18.2	19.3	20.4	21.4	22.3	23.1
25	6.2	8.6	10.5	12.3	14.0	15.4	16.8	18.0	19.1	20.3	21.3	22.3	23.2	23.9
26	7.0	9.4	11.4	13.2	14.8	16.3	17.7	19.0	20.1	21.2	22.3	23.3	24.2	25.1
27	8.0	10.3	12.2	14.0	15.8	17.3	18.7	19.9	21.1	22.2	23.2	24.3	25.2	26.1
28	8.8	11.2	13.2	15.0	16.7	18.0	19.6	20.9	22.0	23.0	24.2	25.2	26.2	27.1
29	9.7	12.0	14.0	15.9	17.6	19.2	20.5	21.3	23.0	24.1	25.2	26.2	27.2	28.1
30	10.5	12.9	14.9	16.8	18.5	20.0	21.4	22.8	23.9	25.1	26.2	27.2	28.2	29.1
31	11.4	13.8	15.9	17.8	19.4	20.9	22.4	23.0	24.8	26.0	26.9	28.2	29.2	30.1
32	12.2	14.7	16.8	18.6	20.3	21.9	23.3	24.6	25.8	27.0	28.1	29.2	30.1	31.1
33	13.0	15.6	17.6	19.6	21.3	22.9	24.2	25.6	26.8	28.0	29.0	30.1	32.1	32.1
34	13.9	16.5	18.6	20.5	22.2	23.8	25.2	26.5	27.7	29.0	29.5	31.1	32.1	33.1
35	14.9	17.4	19.5	21.4	23.0	24.6	26.2	27.5	28.7	29.9	31.0	32.1	33.1	34.1
36	15.7	18.1	20.3	22.2	24.0	25.0	27.0	28.4	29.0	30.9	32.0	33.1	34.1	35.2
37	16.6	19.2	21.2	23.2	24.9	26.5	27.9	29.5	30.7	31.8	33.0	34.1	35.2	36.2
38	17.5	19.9	22.0	23.9	25.8	27.4	28.9	30.3	31.5	32.0	33.9	35.1	36.0	37.0
39	18.1	20.8	23.0	24.9	26.6	28.3	29.8	31.2	32.5	33.8	34.9	36.2	36.8	38.1
40	19.2	21.6	23.8	25.8	27.6	29.2	30.7	32.1	33.5	34.7	35.8	36.8	38.1	39.1

NOTE :

◎ In order to ensure a good operating environment of the laser, to reduce the probability of failure due to condensation. We recommende to prepare an air-conditioned room for the laser, so that the temperature in the air-conditioned room is ≤ 28 ° C, and the relative humidity is ≤ 50%. The water cooler should be placed in a different space from the laser. It is forbidden to place the water cooler in the air-conditioned room;

◎ The laser head works at circulating temperature. In order to avoid condensation on the laser head, it is necessary to adjust the temperature of the cooling water of the external light path to room temperature. It is forbidden to cool the laser head with low-temperature cooling water.

6-Structural Layout

Laser size chart (unit: mm)

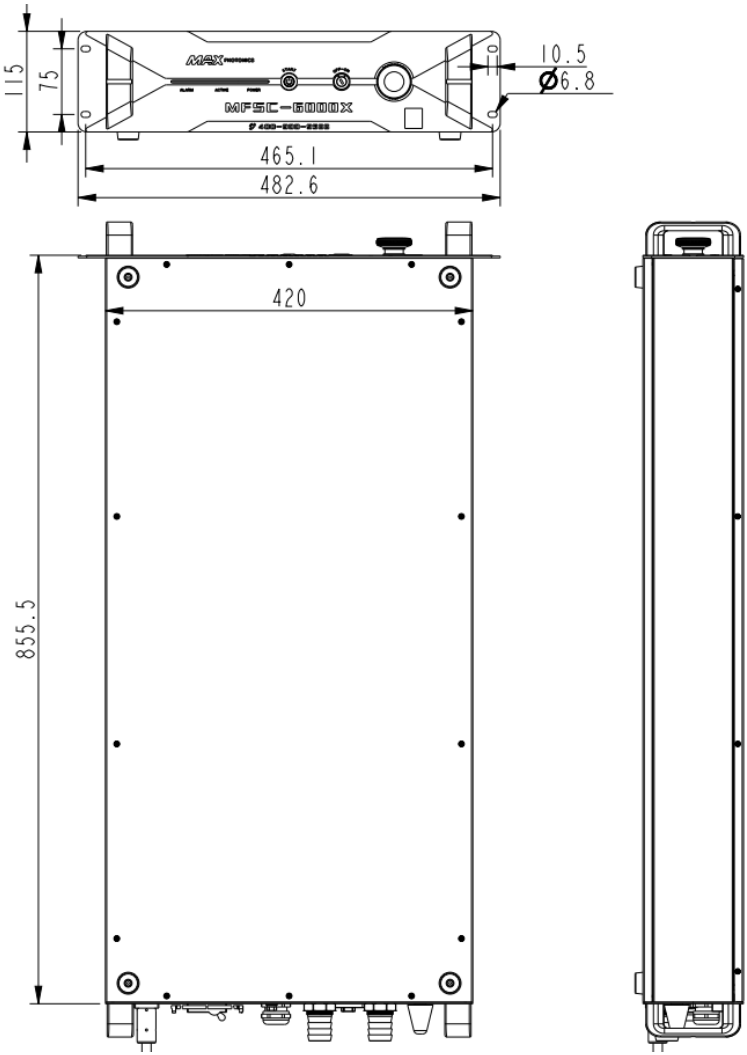

G4.3 QBH Outline dimension drawing of laser output terminal (unit: mm)

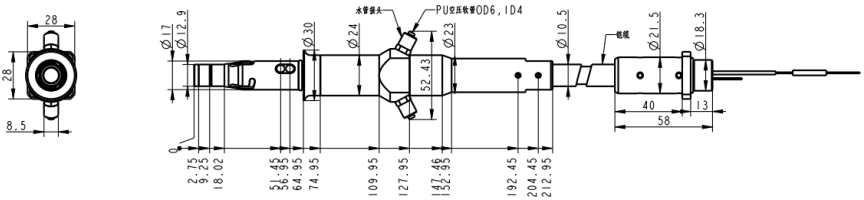

G5 QBH Outline dimension drawing of laser output terminal (unit: mm)

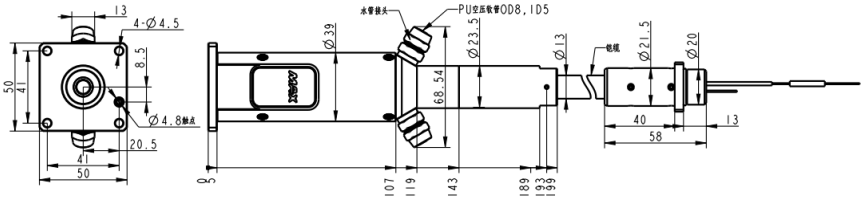

Chapter 5
Unpacking Guide

1-Unpacking Steps

The laser is precise valuables, so Maxphotonics recommends that you unpack the packing box according to the following steps:

1. Place the package containing the laser equipment on a horizontal surface, such as a concrete floor or a hard floor;

2. Open the packaging wooden box, remove the foam upper cover, and take out the accessories;

3. Check the “packing list” to check the accessories;

4. QBH and cable are placed on the top plate of the laser. Please take care carefully to ensure that the minimum bending radius of the fiber cable is >200mm.

5. After the accessories are taken out and counted, the laser is moved out of the box by a motorized forklift, the laser is placed on the flat ground, and the caster brake pads are pressed to prevent the laser from rolling by itself;

6. Please ensure that the laser is in a dry, ventilated, no dust; the 1 meter space around the laser is unobstructed, the front of the laser and the operator's location are unobstructed, the visual is unobstructed, there is no dripping above the laser, and the laser is located. The position is drained smoothly, and no water accumulation occurs.

7. Please purchase the same water pipe according to the water pipe sample attached to the package; the water pipe is connected to the laser inlet and outlet pipe pagoda joint, and is fastened with the attached hose clamp;

8. Save all items after unpacking to prevent future transportation or storage.

NOTES:

◎ If any damage of the external package and internal parts has been found upon receipt of product, please contact Maxphotonics Co., Ltd. or designated agent immediately.

◎ The air conditioner behind the laser has a drain port, connect the drain pipe, ensure that the drain pipe is level, and the height of any position of the drain pipe should not be higher than the outlet height of the drain pipe (if the laser matches the air conditioner).

◎ If the ambient temperature and relative humidity are high enough the laser will run a process of dehumidification for about 30 minutes. It is normal and the laser should be reboot again after the Condense Warning is released.

◎ The chiller should be closed when the laser is turned off in case that the moisture in the air condense on cool parts within the laser. When an air-conditioner is available it is suggested that you run the air-conditioner for half an hour before turning on the chiller and the laser power switch.

Recommendation：Change the environmental temperature and relative humidity and make the laser work away from the dew point (for example keeping the laser in a room with air-condition).

2-Packing List

No.	Names of fittings	Description	Unit	Quantity
1	Fiber Laser	MFSC-xxxx	pc	1
2	External signal wire		pc	1
3	Lens cleaning paper		pc	4
4	Sample of water pipe of laser	Φ25.4mm	pc	1
5	Hose clamps	Galvanized hose clamp, 26-38	pc	2
6	QBH water pipe sample tube	Φ6x4mm	Pc	1

Chapter 6
Operation Guide

1-Notice

CAUTION:

◎ Please refer to Chapter 4 "Specification" for proper electrical power.

◎ Please refer to Chapter 2 "General Safety Information" for inspecting whether the configuration environment of peripheral work of the laser meets the requirements.

2-Electrical Power Connection

The laser power input line needs to be connected to three-phase four-wire AC. It is important to ensure that the zero-fire wire is correctly connected according to the line mark and the ground wire is well connected. Poor contact of the ground wire may cause potential damage to the laser.

For ensuring the safety feature, Maxphotonics recommends you connect a 63A circuit breaker (air switch) in series between the power supply unit and the laser. This electric power shall be in close proximity to the power supply unit of the equipment and can be easily disconnected.

Refer to Chapter 4 "Specification" to determine your electrical specification if you have any problem about wiring.

3-Extension Interface

Laser The CTRL interface is a high quality DB44 interface that provides a variety of signals for functional control of the laser, as described below:

6000X(G6.1) CTRL Interface definition Table

Ctrl Interface Pin	Wire Color	English Label	中文标签	Notes
34	Orange	EXLOCK_CH1A	互锁 1A	± short connection: laser normal control light (dry contact) ± Off: laser lock, can not produce light (dry contact)
33	Orange black	EXLOCK_CH1B	互锁 1B	
38	Light blue	EMERGENCY1_INPUT 1A	急停输入 1A	± short connection: laser normal control light (dry contact) ± Off: The laser stops abruptly, and no light can be produced
37	Light blue black	EMERGENCY1_INPUT 1B	急停输入 1B	
19	Red	ENABLE1+	使能输入 1+	High: 20VDC ≤ V ≤ 30VDC Low level: 0VDC ≤ V ≤ 5VDC I ≧ 5mA
4	Red and white	ENABLE1-	使能输入 1-	
17	Black	PWM1+	调制输入 1+	High: 20VDC ≤ V ≤ 30VDC Low level: 0VDC ≤ V ≤ 5VDC I ≧ 5mA
2	Black and white	PWM1-	调制输入 1-	
14	Green	AN1_PWR_PEAK_10V+	0-10V 输入 +	Control laser output power (1V-10%, 10V-100% I ≧ 1mA)
29	Green and white	AN1_PWR_PEAK_10V-	0-10V 输入 -	
40	Brown	ERROR/ALARM_A	故障输出 A	Dry contact output, on-fault, disconnect, normal, (Contact voltage V ≤ 30VDC, contact current I≤100mA
39	Brown and white	ERROR/ALARM_B	故障输出 B	
13	Nc		预留	
23	Yellow	CONTROL A	外部出光 A	± short connection: control laser light output (dry contact) ± Off: control laser light off (dry contact)
8	Yellow and black	CONTROL B	外部出光 B	
shell	Yellowish green		PE	Ground wire

ATTENTION:

◎ For your safety and reliable operation of the equipment, please strictly follow the product instructions to install and connect the external control of the product Cables, power cables, and ground cables.

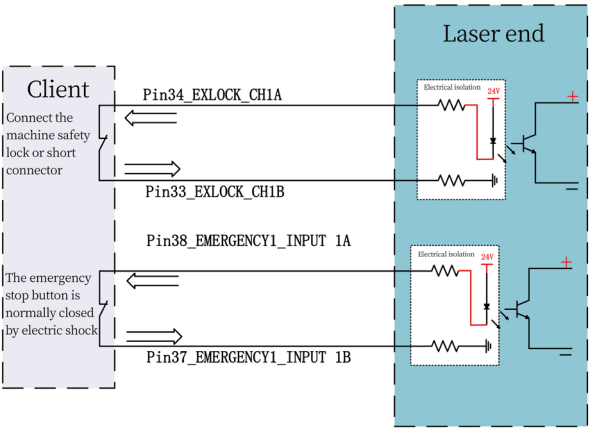

ATTENTION:

◎ Interlock/scram input is a switch type (dry node) signal prohibited from accessing voltage/current signals.

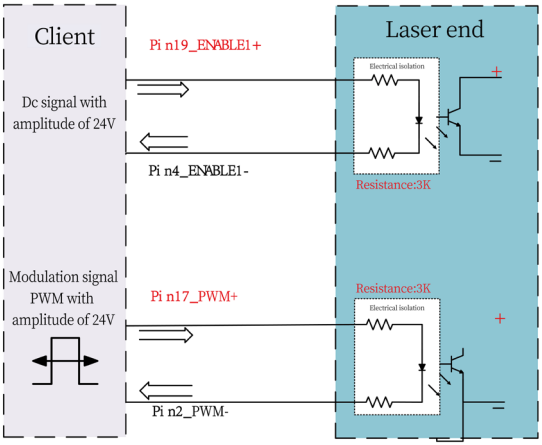

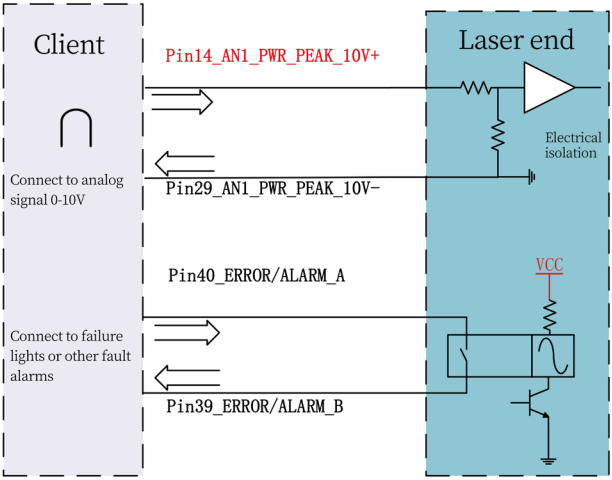

Fault output: external voltage V < 30V, current I < 100mA

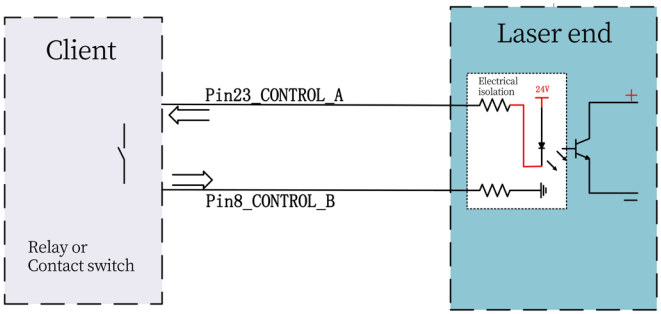

ATTENTION:

◎External outgoing light signal belongs to switch type signal (dry node) Voltage/ current signal is prohibited;

◎ For safety reasons, the laser is initialized every time it starts After the external light signal needs to be short-circuited once again Will take effect to allow light output.

4-Start Steps

WARNING:

◎ Make sure that all the electrical connections (including cooling water connections) are connected prior to use. All the connectors must be held steady with screws if possible.

◎ NEVER look directly into the output fiber and make sure that you wear the laser safety eyewear while operating the product.Make sure all power is removed from the laser when wiring.

Start steps are as follows:

(1) Start the water cooler;

(2) Remove the collimator end cap;

(3) Check that the collimator end face is clean and free of debris;

(4) Ensure that the emergency stop and interlock of the external control line are in the short-circuit state;

(5) Turn on the laser power supply.

5-Mode Description

The working modes of the laser are as follows:

1.CW Mode: The light emitted is continuous and this mode is used for cutting.

2.Modulated Mode: The light emitted is pulsed and this mode is used for controlling the output average power of the laser.

3.External Control: Control the output of the laser via external control software.

External Control Signal Timing:

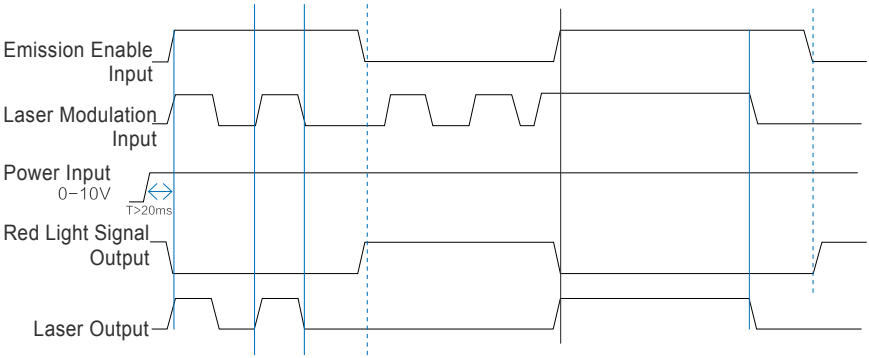

4. Indicator status indication:

◎ Power-on preheating state: the POWER light traffic light flashes at 1HZ alternately;

◎ Standby state: POWER light green on, ALARM light green on;

◎ Light output status: ACTIVE light green on;

◎ ALARM status: ALARM light is steady red;

6-Software Description

(1) The software package was decompressed, and the operation environment (NET4.6) and monitoring software (G6-Series-n.n.n.n) were installed. (Windows 10 systems or systems with.NET 4.6 installed, no need to install NET4.6).

(2) After installing the operating environment and monitoring software, a "G6-Series" shortcut will appear on the desktop.

(3) Use network cables to connect the laser backplane EtherNet communication interface to the computer, and power on the laser.

(4) Configure the IP address of the network adapter connected to the laser so that it is in the same network segment as the laser. The default IP address of the laser is 192.168.0.178.

(5) Double-click the "G6-Series" shortcut on the desktop to open the monitoring software.

(6) Click the "Login" button to try to connect with the laser.

(7) If the laser has been powered on, and the model can match the monitoring software, it will enter the main interface.

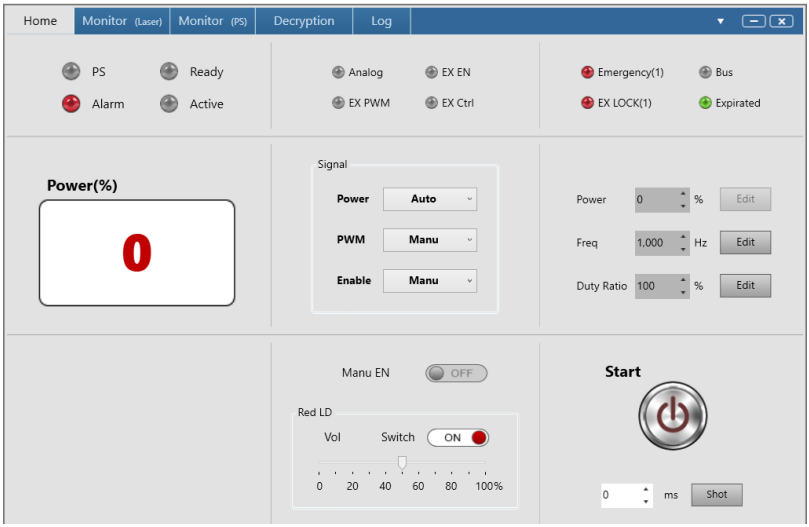

(8) Laser monitoring page.

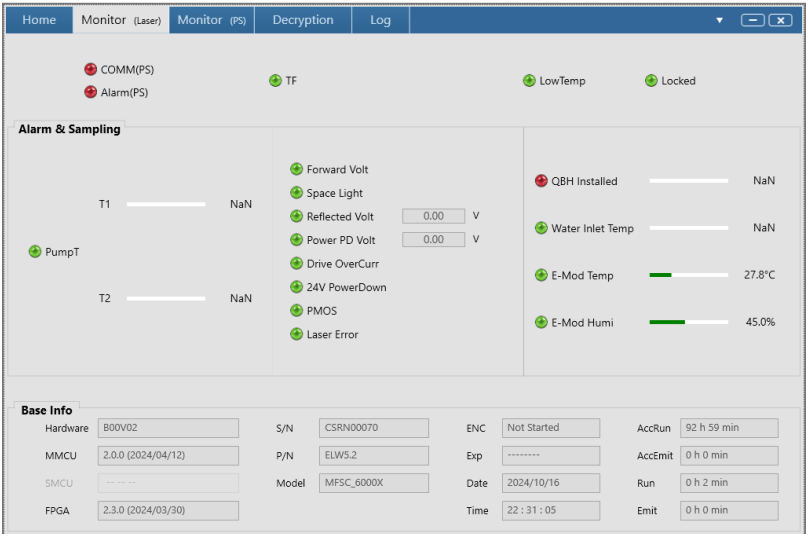

(9) Decrypt the page.

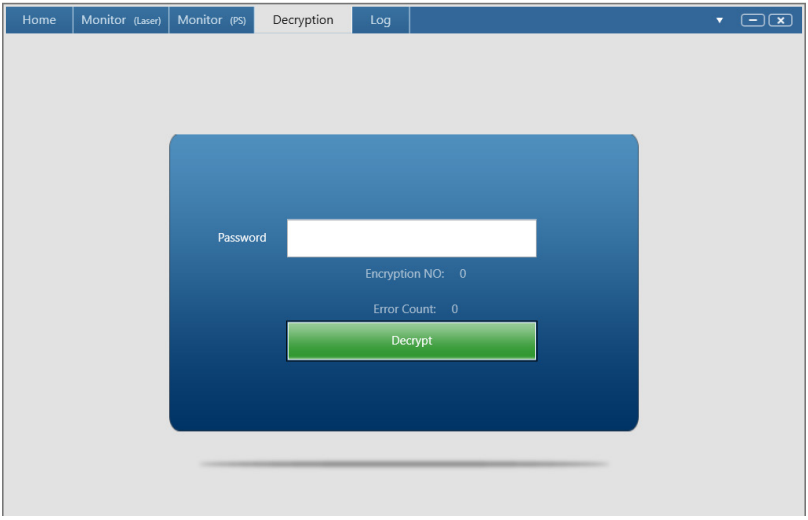

7-Error List

The fault alarm points set by the laser include:

SN.	Message	Description	Trouble shooting
1	Front lamp warning	Laser internal light path testing fault	Operation leads to low output power of laser such as low modulation frequency, low peak power, low cutting power
2	Water inlet temperature alarm	Water inlet temperature fault	The water inlet temperature is faulty. Please check whether the set temperature of your chiller meets the requirements.
3	Pump source temperature alarm	Chiller or laser internal pipeline failure	Please check the pressure of the chiller water pressure gauge; check whether the water inlet and outlet pipes are reversed; check the water pipes or use air guns to empty the pipes.
4	Overcurrent warning	Overcurrent fault of laser	If "0-10V" DA value exceeds the pre-set value, the internal overcurrent fault will occur; if the fault is not caused by this reason, please contact Maxphotonics.
5	QBH installation alarm	Install error of QBH	The fault will be produced when QBH head is not inserted in the internal part of the cutting head; if this cause is excluded, please contact Maxphotonics.
6	Encrypted alarm	Laser encryption expires	The panel ALARM indicator blinks alternately red and green, continue to operate normally Please contact Chuangxin customer service staff.

NOTE:

◎ All the alarm message will be displayed on the Monitor Software. Please pay attention and contact our service personnel if you need.

Chapter 7
Fiber Connector Inspection and Cleaning Guide

1-Notice

It is imperative that the fiber connector is checked for dust, dirt, or damage every time it is connected to any optical device, before use. The use of a dirty or damaged fiber connector can result in serious injury and/or laser damage. Maxphotonics is not responsible for any damage due to contaminated connectors.

For cleaning a fiber connector, you need the following materials:

1、Powder-free rubber gloves or fingerstall

2、Lint free optical cleaning wipes and/or swabs

3、Ahydrous ethanol (Optical level, pure >99.5%)

4、Acetone (Optical level, pure >99.5%)

5、Compressed air (oil free, water free)

6、Microscope

7、Light source

IMPORTANT :

◎ It is imperative that you wear powder-free rubber gloves during this cleaning procedure! It is hereby stated that damage to the fiber connector can occur due to mishandling, the use of incorrect cleaning procedures, or chemicals for cleaning. This is not covered by the Maxphotonics' warranty. Ahydrous ethanol

and acetone should be managed and stored according to the local law and instructions.

2-Operating Procedures

Clean and maintain the fiber laser according to the following procedures:

1、Cut off the power supply;

2、Remove the black outer protective sleeve and leave the white inner cap on and clean the fiber connector exterior with optical cleaner, wipe it with a clean optical wipe and dry it with compressed air;

3、Place fiber connector in the holder of the microscope;（7-1）

4、Remove the protective inner cap from the connector;（7-2）

5、Focus the microscope onto the connector surface;

6、Use a light source to illuminate the face of the fiber connector so that the light is reflected off the surface of the endface. This is achieved if you see a bright golden shine from the QBH connector endface.

7、Inspect the endface surface carefully. Contamination will lead to dark spots/burns on the surface and possibly damage to the fiber and/or laser. If contamination is visible on the endface, cleaning is necessary.

8、Take out the cap and sleeve, then connect the fiber connector with the cutting head quickly and fasten them. (Place the cap face down on a clean surface or a lint-free wipe.)

7-1 Remove the fiber protective sleeve and protective film

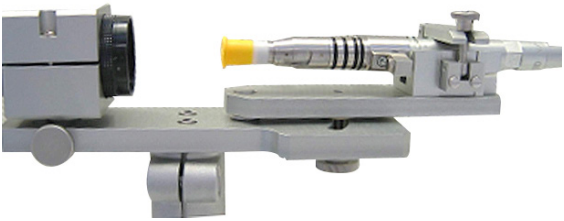

7-2 Install the fiber connector under microscope

7-3 Cleaning protective lens with swabs

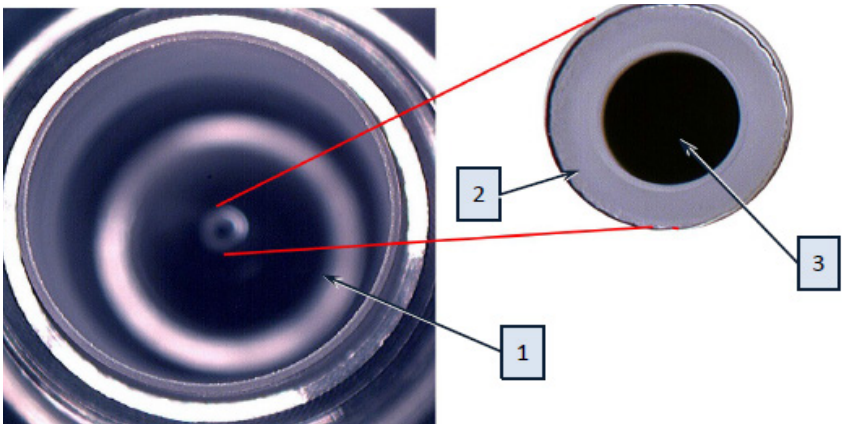

1、quartz 2、fiber cladding 3、fiber core

7-4 Actual image of the fiber

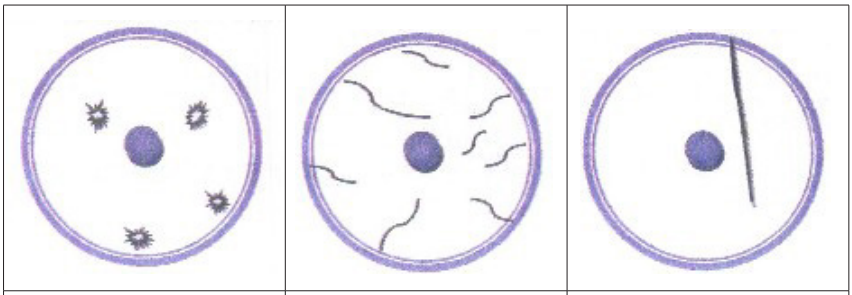

surface damaged	coating damaged	scratch

7-5 Endface may be damaged

IMPROTANT :

◎ Do not reuse a lint-free optical wipe or swab.

◎ Do not touch the protective lens of the fiber connector.

◎ Do not blow directly, or else new dirty will be brought.

◎ Do not touch the tip of the cleaning swab with your fingers.

◎ Cleaning is necessary before place the protective cover and sleeve.

◎ Never blow air directly at the surface, because you could imbed contaminants into the surface. Always blow across the surface!

◎ If the fiber connector could not be installed in optical system immediately, please cover it with the protective cap cleaned with compressed air.

CAUTION :

◎ It is hereby stated that damage to the fiber connector can occur due to mishandling, the use of incorrect cleaning procedures, or chemicals for cleaning. This is not covered by the Maxphotonics' warranty.

Chapter 8
Service and Maintenance

1-Maintenance Notes

CAUTION :

◎ No operator serviceable parts inside. Refer all servicing to qualified Maxphotonics personnel.

◎ For ensuring that the repairs or replacement within the warranty scope can be carried out, and perfectly maintaining your interests, please submit application to the Maxphotonics or the local representative after finding the faults. Upon receiving our authorization, you need to pack the product in a suitable package and return it.

◎ You should keep the proof when finding any damage after receiving the product, so as to claim the rights to shippers.

IMPORTANT :

◎ Do not send any product to Maxphotonics without RMA.

◎ If the product is beyond the warranty period or the warranty scope, customers shall be responsible for the repairing cost.

CHANGE :

◎ We have the rights to change any design or structure of our product, and the information is subject to change without notice.

2-Service Statements

More problems regarding the safety, set-up, operation or maintenance please reading this "User Guide" carefully and flowing the operation steps stictly. Please call the Customer Service Department for other questions.

Please call the Customer Service Department for other questions: 400-900-9588.

Your problems will be follow-up by our technical support group after verified. If the problems cannot be solved , you may need to return the product to Maxphotonics for further troubleshooting.

Chapter 9
Warranty Statements

1-General Clauses

Maxphotonics Co.,Ltd. carries out warranty for any defect of the product caused by its material and production technology within the warranty period agreed in contract, and ensures that its product meet the relevant quality and specification requirements specified in the document under normal use condition.

Maxphotonics Co.,Ltd. rationally determines to repair or replace the products with faults caused by its material or production technology within the warranty period, and repairs or replacement of all the products within the warranty scope are carried out according to the rest of the warranty period of primary products.

2-Warranty Limitations

Under the following circumstances, the products, parts (including the fiber connectors) or equipment are not within the warranty scope:

（1）Tampered, opened, detached or reconstructed by personnel outside Maxphotonics;

（2）Damaged from misuse, neglect or accident;

（3）Used beyond the specification and technical requirements of the product;

（4）Indirectly damaged from users' software or interfaces;

（5）Improper installation or maintenance, or operating under conditions not included in this manual;

（6）The fittings and the fiber connectors are not included in the warranty scope.

Customers are obligated to understand the information above and operate according to the User Guide and specification, or the faults arising therefrom are not included in the warranty scope.

IMPORTANT:

◎ Within the warranty scope, purchasers must feed back within 31 days after finding the product defect.

◎ Maxphotonics does not grant any Third Party rights to repair or replace the parts, the equipment or other Maxphotonics products.