SOVOL

SV06 ACE

User Manual

V1.0

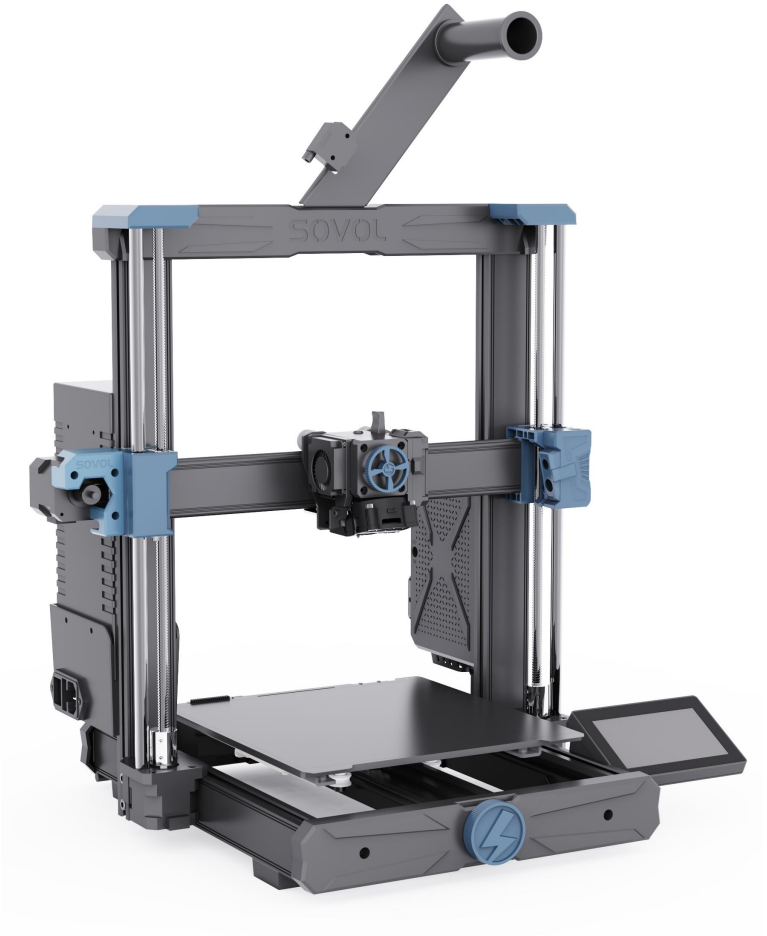

Dear customers:

Thank you for choosing Sovol printers! Sovol is committed to providing excellent machines to 3D printing enthusiasts all over the world .This manual is designed for SV06 owners to start their SV06 ACE printing journey.We still recommend all the SV06 ACE owners to read the manual carefully even if you are familiar with the 3D Printing technology, as there are lots of important information about the SV06 ACE for you to learn and help you get better printing exprience .In this manual there are some tutorials can be found on official website and group you can scan the QR-codes.

sovol support group

sovol official website

Catalogue

1 Note 02

2 Equipment Parameters 03

3 Package List 04

4 Assembly

Mian frame installation 05

Nozzle and camera installation 06

Screen and power supply installation 07

Feeder rack installation 08

Connect the cables 09

5 Function List 10

6 Touchscreen 11

7 Start-up 12

8 Fill Filament 13

9 Print the file 14

10 OrcaSlicer 15

11 Obico 16

12 Motherboard 19

Note

- Do not use the printer any way other than described here in order to avoid personal injury or property damage.
- Do not place the printer in the environment with large vibration or other instability. The shaking of the machine will affect the printing quality of the printer.
- Please do not place the machine in inflammable and explosive materials or near high heat source.
- Please place the machine in a ventilated, cool and dust free environment.
- It is recommended to use the material recommended by the manufacturer to avoid machine damage.
- Do not use any other power cable except the one supplied. Always use a grounded three-prong power outlet.
- Please do not open the plastic cover during usage, otherwise the printing will be interrupted.
- Do not wear cotton gloves when operating the printer. Such cloths may become tangled in the printers moving parts leading to burns, possible bodily injury, or printer damage.
- Please wait a moment to remove the print after the print is finished.
- It's not recommended to use the third party firmware or mainboard etc, or the warranty will be void.
- Clean the printer frequently. Always turn the power off when cleaning, and wipe with a dry cloth to remove dust, adhered printing plastics or any other material off the frame, guide rails, or wheels. Use glass cleaner or isopropyl alcohol to clean the print surface.
- Children under 10 years should not use the printer without supervision.
- This machine is equipped with a security protection mechanism.Do not manually move the nozzle and printing platform mechanism manually while booting up,ot herwise the device will automatically power off for safety.
- Users should comply with the laws and regulations of the corresponding countries and regions where the equipment is located (used), abide by professional ethics, pay attention to safety obligations, and strictly prohibit the use of our products or equipment for any illegal purposes. Sovol will not be responsible for any violators' legal liability under any circustance.

Equipment Parameters

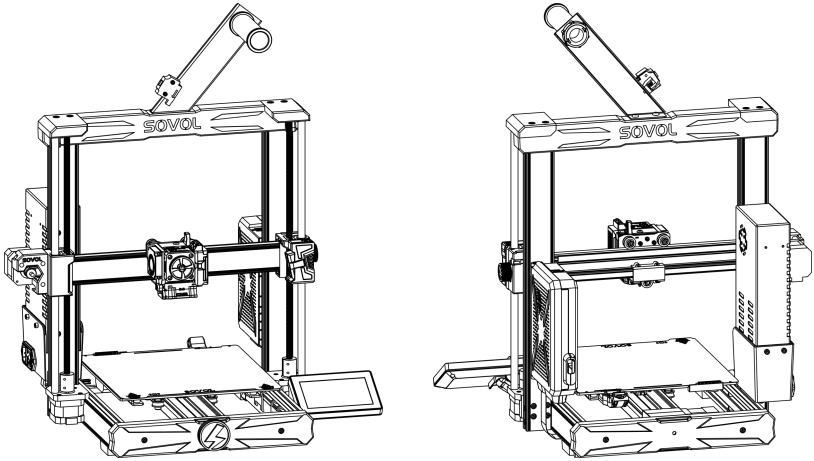

Model	SV06 ACE
Software language	English
Print method	Network interface USB cord and WIFI
Type	FDM
Number of nozzles	1
Print size	220*220*250mm
Recommend Printing speed	200-300mm/s
Printing accuracy	±0.1mm
Nozzle diameter	0.4mm (Replaceable)
Nozzle temperature	≤300℃
Hot bed temperature	≤100℃
Applicable filament	PLA/ABS/PETG/TPU/WOOD
Diameter of filament	1.75mm
File format supported	G-code
Voltage	AC 100~120V / 200~240V, 50/60Hz,
Operation system	Windows,Linux,Mac
Power supply	360W/24V

Package List

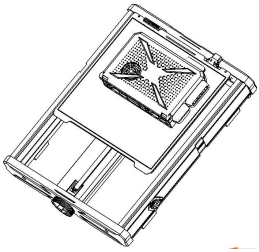

Base kit

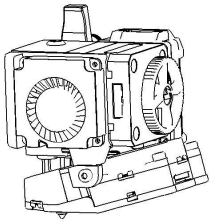

Extruder kit

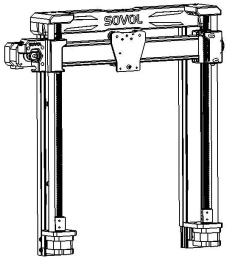

Gantry

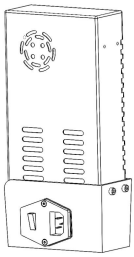

Power box

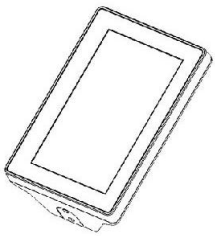

Disaplay

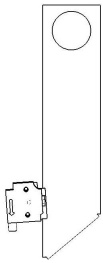

Rack

Tool Box

1

M5X50*4

2

M3X8*3

3

M4X20*2

4

M5X10*2

Zip Tie

Barrel

Scraper knife

USB Flash Drive

Power cord

Nozzle

Nozzle Cleaner Needle

Diagonal pliers

Toolkit

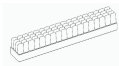

Silicone brush

1 First, remove the gantry frame gantry assembly and base kit from the packaging box, as well as the M5*50 screw from the accessory pack.

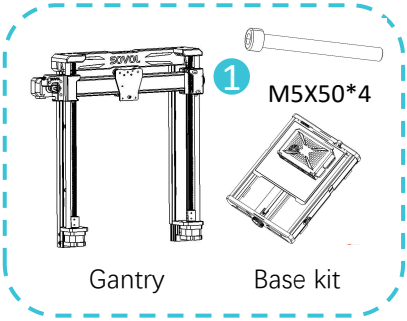

1

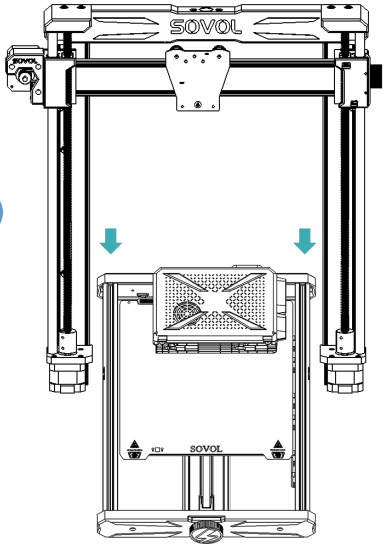

Position the gantry assembly directly in front of the chest, and insert the gantry into the groove in the base assembly.

2

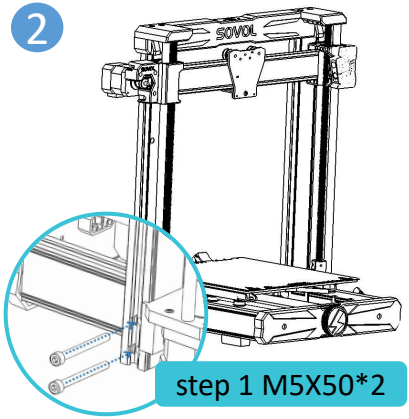

Tighten the screws on both sides to complete the installation.

2 **As shown, pick up the control box and assemble it.**

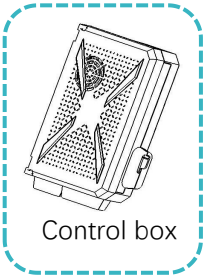

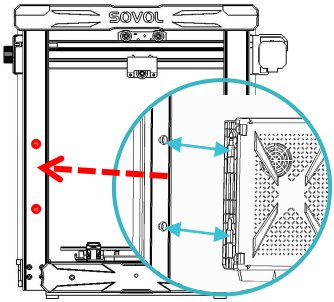

Insert the side of the control box into the T-buckle on the back of the Z-axis profile.

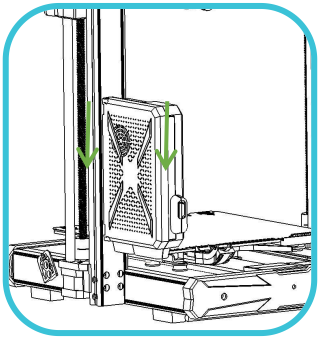

After aligning the T-buckle, firmly press down as shown to complete the control box assembly.

1 Install the camera module.

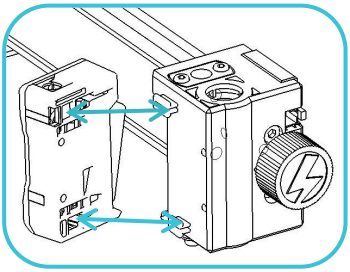

Remove the camera module and align the notch with the step on the X-axis securing bracket.

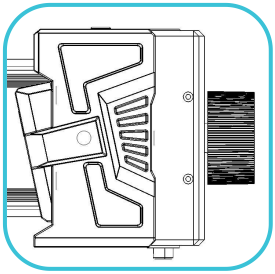

Align the camera module with the X-axis bracket.

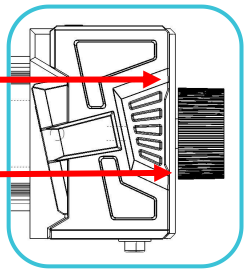

Buckle in from left to right and push to the top to complete the installation of the camera module.

2 Attach the extruder kit to the slide base using the three M3X8 screws and tighten them.

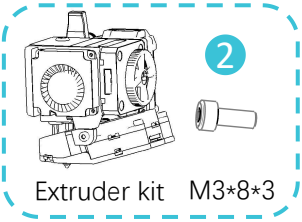

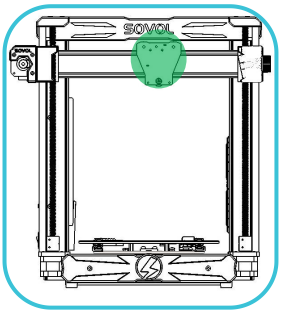

Align the nozzle kit with the three pre-drilled holes on the X-axis slide base then lock it with M3x8 screws from the rear of the slide base.

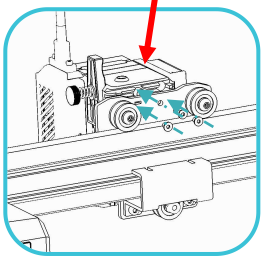

step 2 M3X8*3

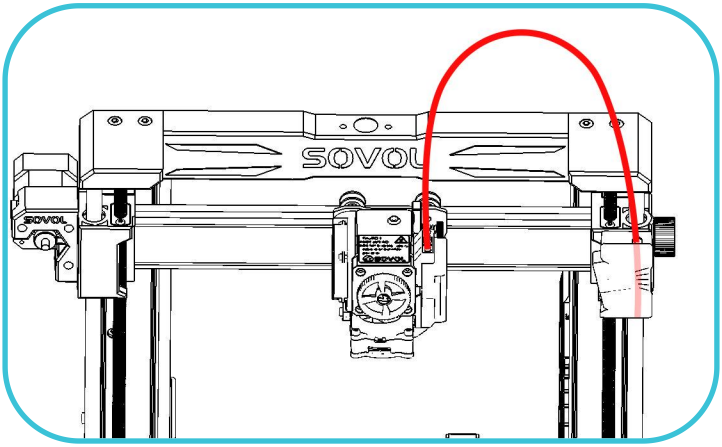

When installing the nozzles, make sure to check if the harness rotates.

1 **Remove the touchscreen from the package and locate the machine's right side. Attach it to the bracket and slide it down to lock it into groove.**

Disaplay

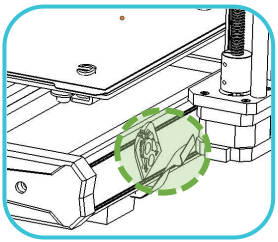

Locate the right profile with the cables.

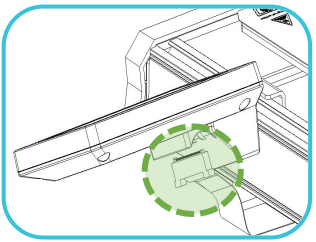

The cable is connected to the touch screen interface beneath the profile.

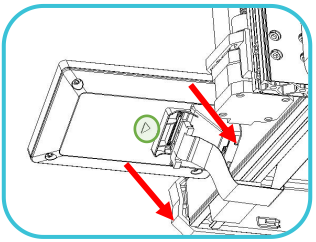

Then press the touchscreen down along the groove to secure it in the groove.

1.The golden side of the screen cable needs to be installed towards the“ ▶”sides.
2.When disassembling the screen, you need to press the buckles on both sides to take out the cables.

2 **Install the power supply to the left profile of the gantry with two M4X20 screws and tighten them.**

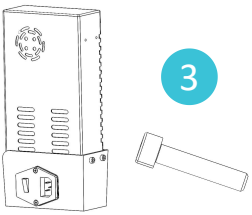

Power box M4X20*2

Align the mounting holes on the power supply box with those on the back of the left profile, and secure it in place by tightening the screws.

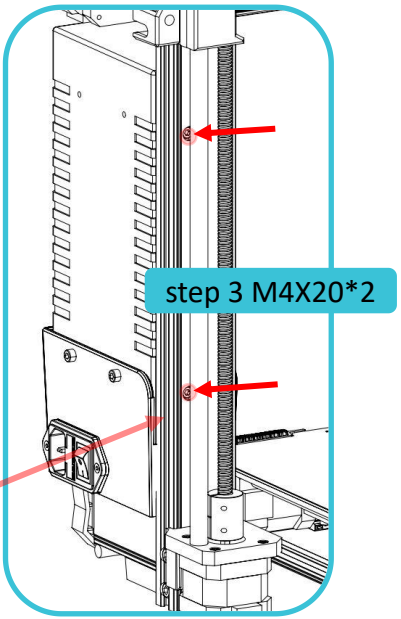

1 **Install the rack barrel.**

2 **Attach the rack plate to the top of the machine using two M5X10 screws.**

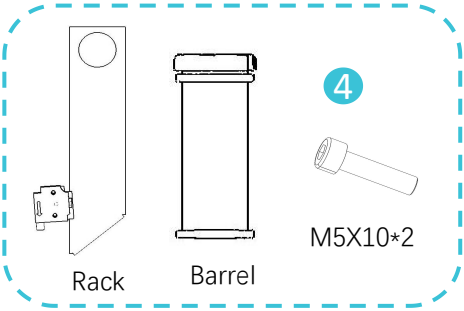

1 (This part of the rack) Facing the front of the machine.

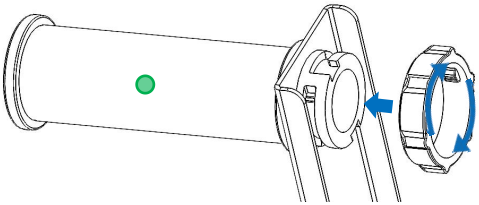

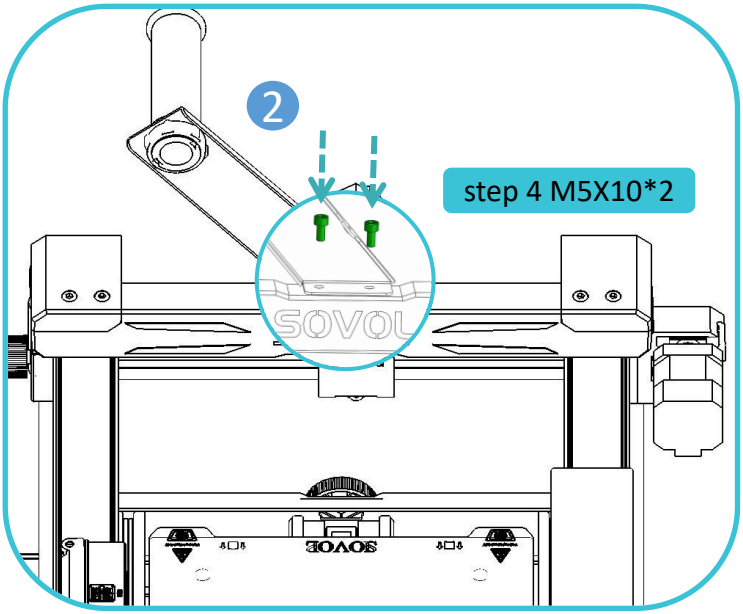

*The picture shows the back of the machine,When the back of the machine is facing you, the rack faces to the left.

Assembly

Connect the cables

All wiring connections of this machine need to be turned off before plugging and unplugging.

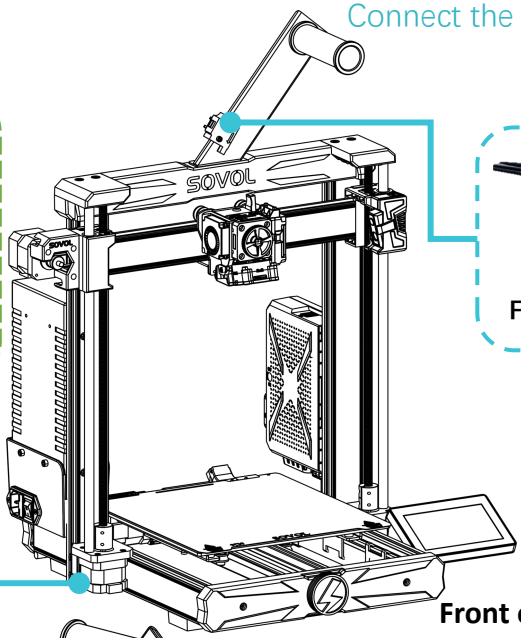

Filament sensor

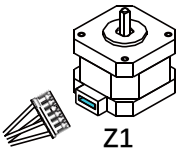

Z1 connector

Front of the machine

X-axis motor connecter

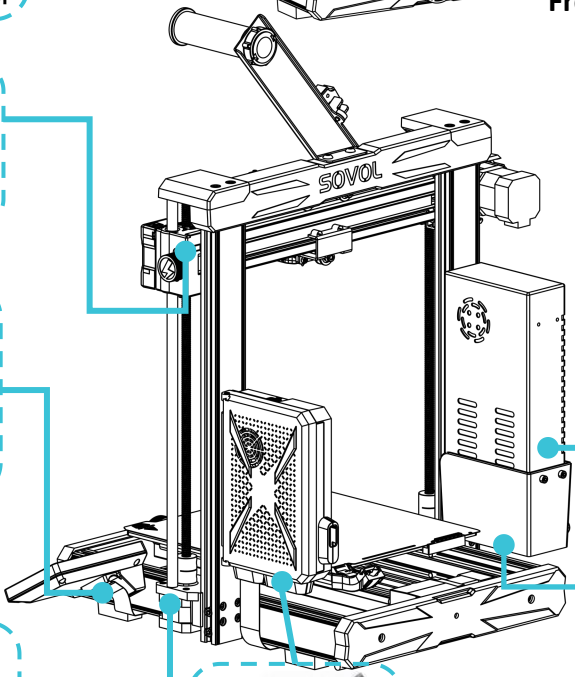

*Please select the correct input voltage to match your local power supply. (230V or 115V).

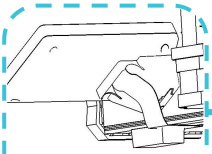

Disaplay

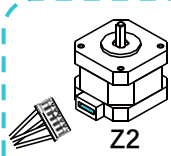

Z2 connector

Filament sensor

Power Connection

Back of the machine

Function List

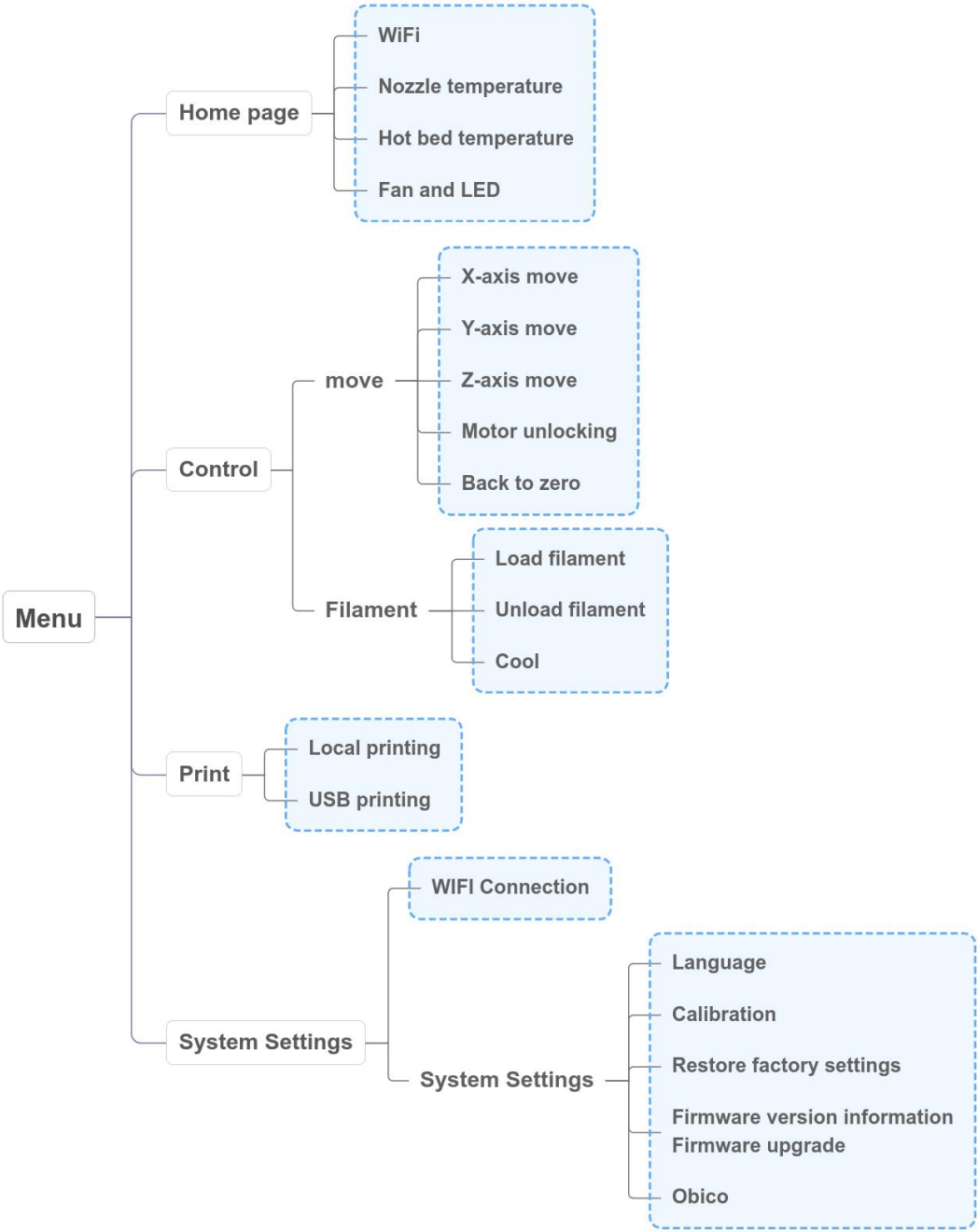

Touchscreen

Mian

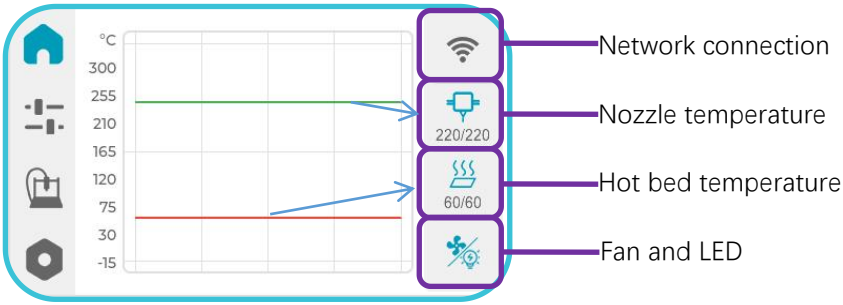

Back to zero

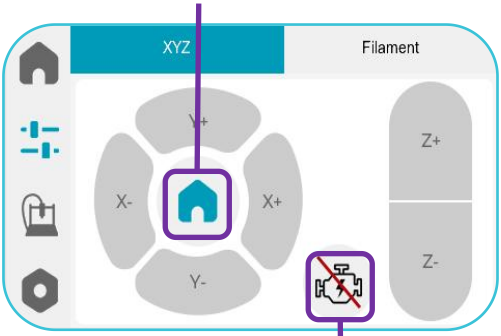

Motor unlok

Start-up

1 After the entire installation process is completed, plug in the power cord and toggle the power switch on the left side of the machine. The printer's display will light up, indicating that it has entered the booting guidance phase. Follow the steps below for operation.

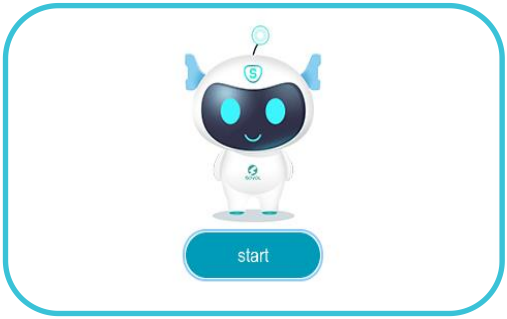

Tap“start”

Language Selection
(8 languages available)

Connect to WiFi
Select your home WiFi network.

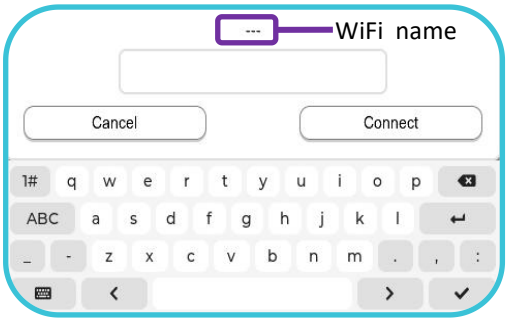

Enter the password and
connect to the WiFi network.

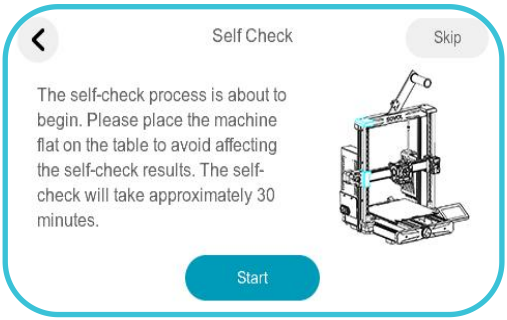

Power on calibration

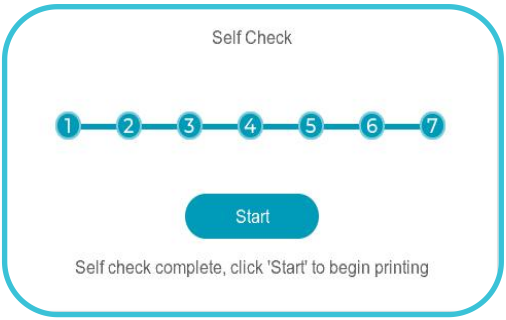

StartCalibration complete
click start to print.

Fill Filament

1 After completing the boot guide, please load the filaments before starting printing.
Cut the filament tip at a 45° bevel angle and insert it into the feeder, pushing it up to the gear.

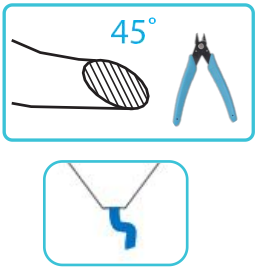

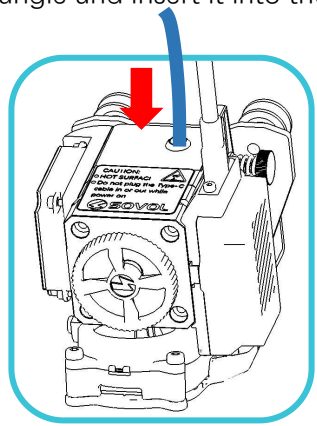

2 Click on Filament on the main interface → Select PLA → Load Filament.
The extruder will automatically rotate to feed the material in. Observe the material flowing out of the nozzle bottom to confirm the loading of the material.

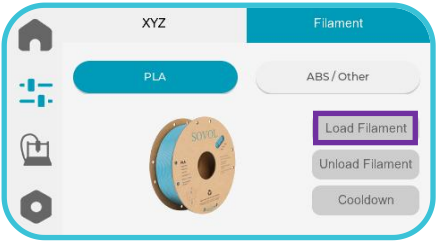

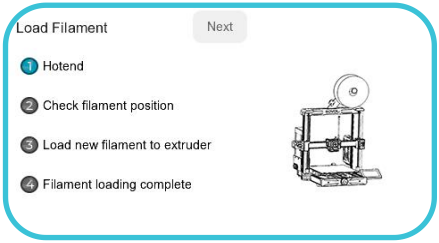

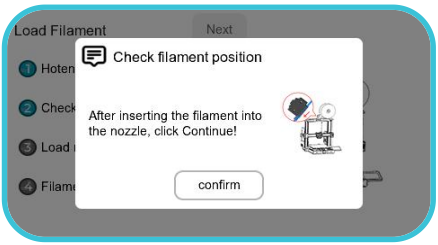

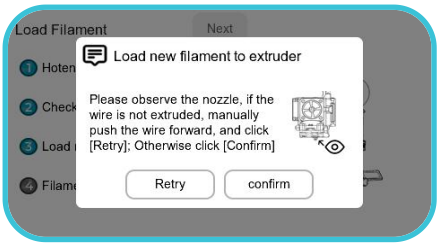

3 To replace the filament, click "Unload Filament." Once the filament is unloaded, remove it and refill it by following the steps above.

Print the file

1 Plug in the USB and wait for the display to load the print content, and then follow the steps below to print.

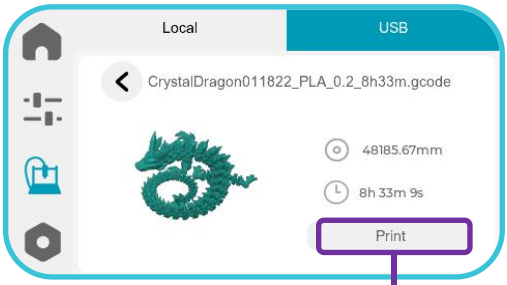

Click Print

2 Select the file you want to print.

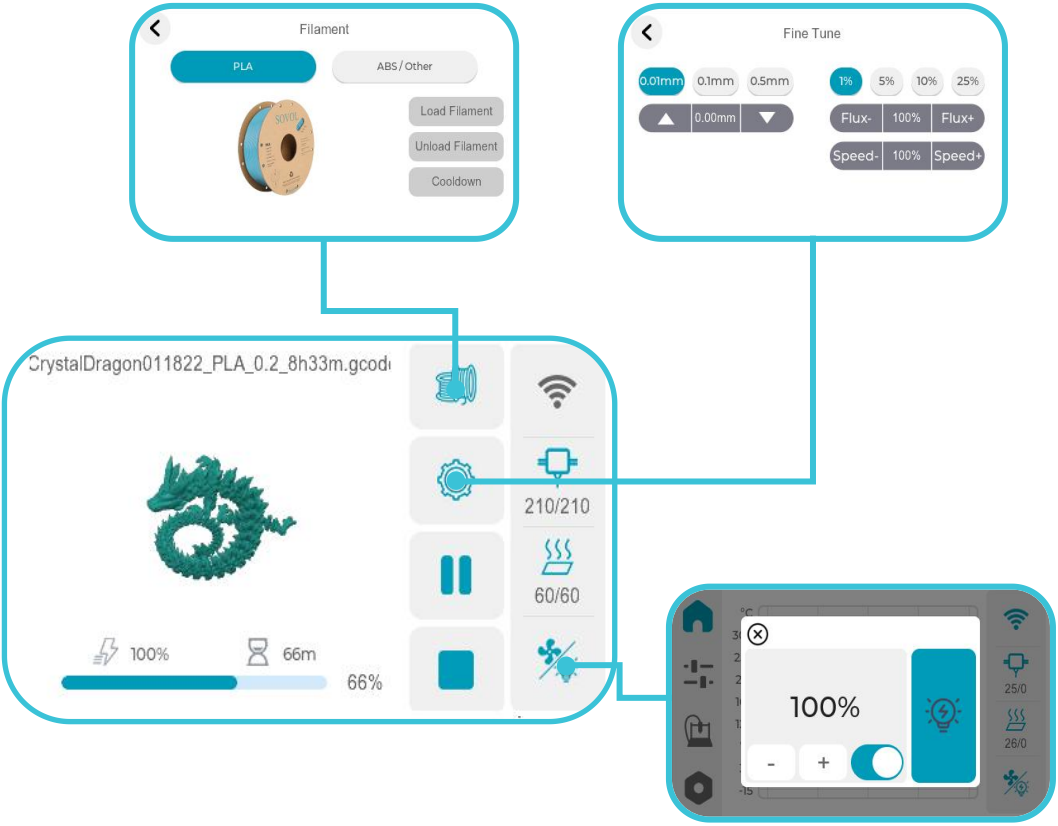

OrcaSlicer

OrcaSlicer_2.1.1_x64_.exe

1 Double-click and install the file "OrcaSlicer" on the USB flash drive.

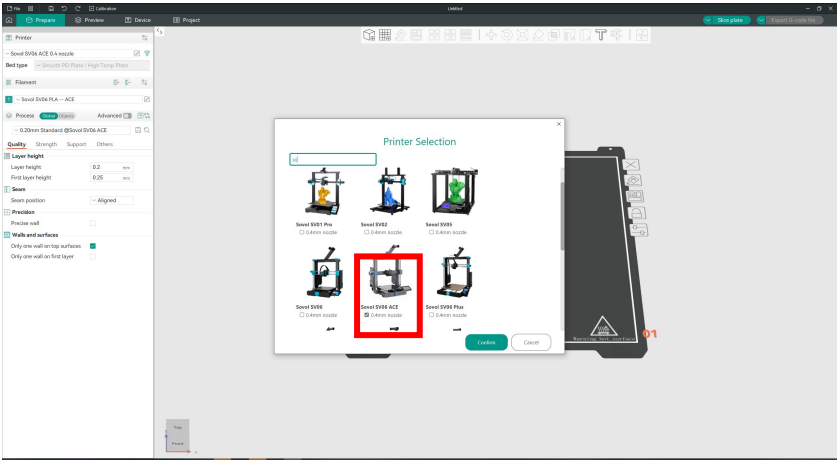

2 Select add SV06 ACE and the parameters are already set in the system.

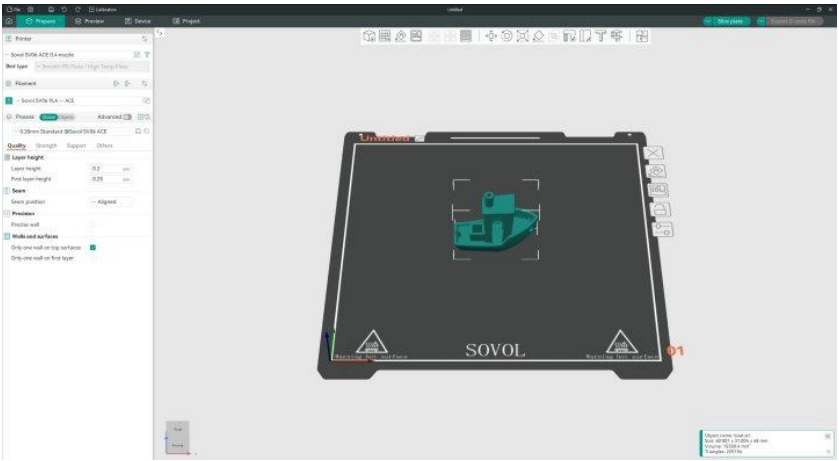

3 Select and add the model you want to print.

Obico

Obico Download

a. For Android users: visit the Google Play store,search. for“Obico” and select install app.

b. For iOS users: Visit the Apple APP Store, search for “Obico”, and then select Install APP.

c. Via Web interface: If you want to access via Web interface.

https://obico.io

1. Start the Obico operating interface of the printer and follow the steps below.
2. Connect the Obico software on your phone. Open Obico downloaded from the above website.

①.Click on ‘SKIP’

Follow the red insruction box to do the following.

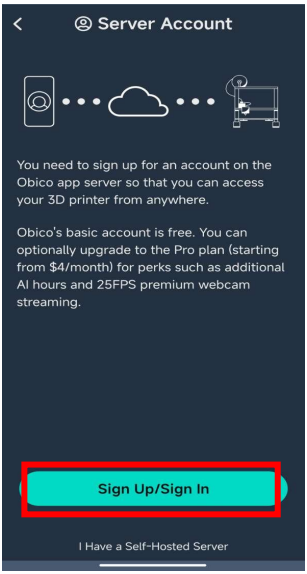

②.Click on ‘Sign Up/Sign in’

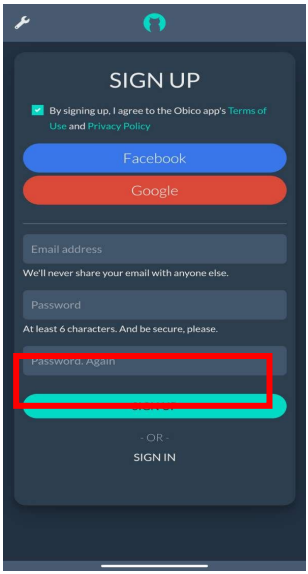

③.Register an account, enter the information, and click on ‘SIGN UP’

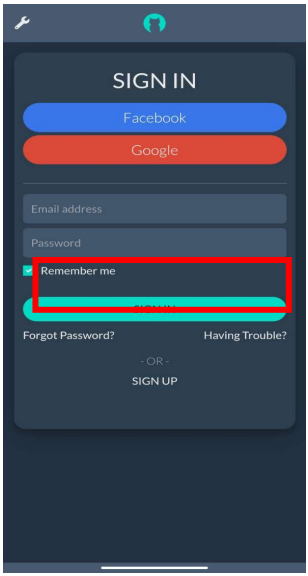

④.Enter the account information and click on ‘SIGN IN’

Obico

⑤.Click the main menu

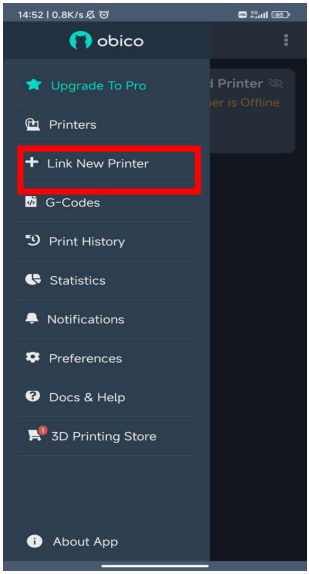

⑥.Click the 'Link New Printer'

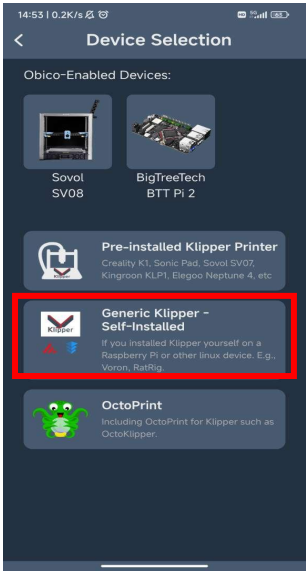

⑦.Click the 'Generic Kilper-Self-Installed'

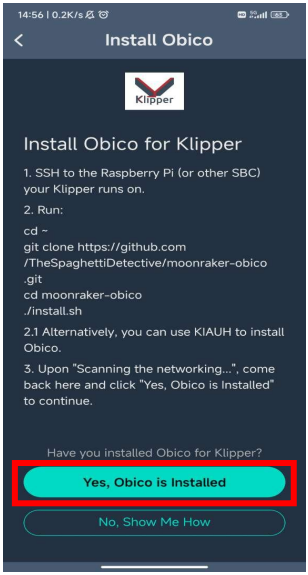

⑧.Click the 'Generic Kilper-Self-Installed'

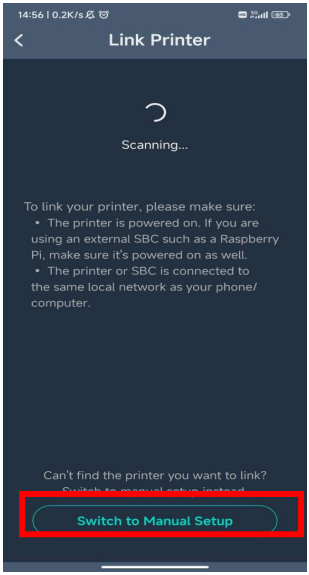

⑨.Switch to Manual Serup

⑩.Click the 'Obico menu on the touch sereen'

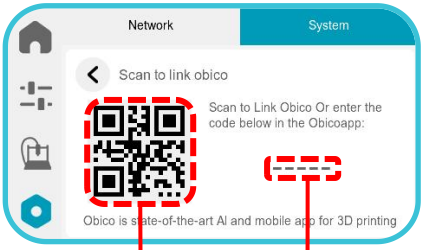

Machine QR code

One-time password

Scenario 2: If the machine cannot be detected, manual connection is required. Please click "Switich to Manual Setup"

Motherboard

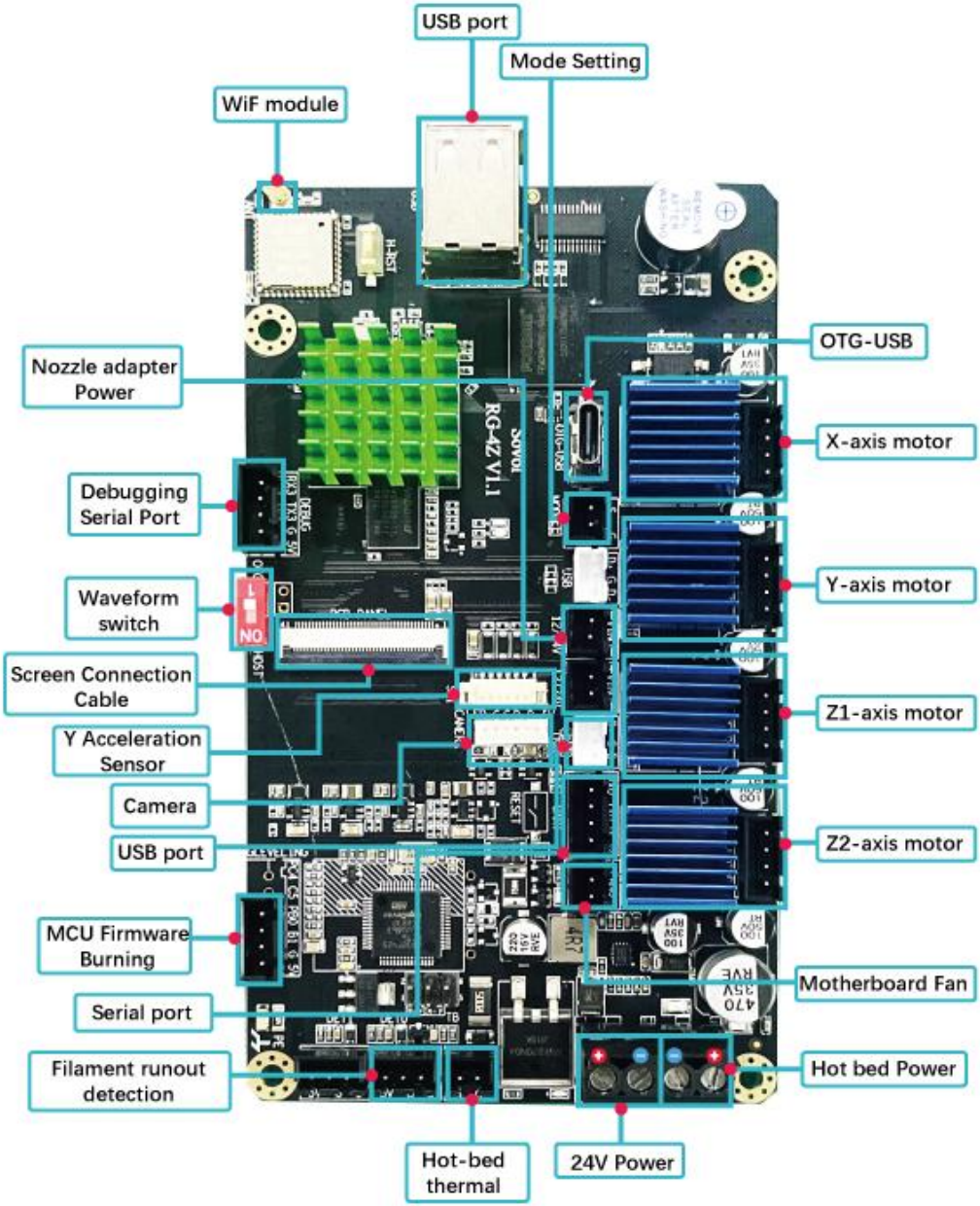

sovol support group

sovol official website

SHENZHEN Lian Dian Chuang Technology CO., LTD.

Official Website: sovol3d.com E-mail: info@sovol3d.com

FCC Caution:
This device complies with part 15 of the FCC Rules. Operation is subject to the following two conditions:(1) this device may not cause harmful interference, and (2) this device must accept any interference received, including interference that may cause undesired operation.
Any changes or modifications not expressly approved by the party responsible for compliance could void the user's authority to operate the equipment.
NOTE: This equipment has been tested and found to comply with the limits for a Class B digital device, pursuant to Part 15 of the FCC Rules. These limits are designed to provide reasonable protection against harmful interference in a residential installation. This equipment generates, uses and can radiate radio frequency energy and, if not installed and used in accordance with the instructions, may cause harmful interference to radio communications. However, there is no guarantee that interference will not occur in a particular installation.
If this equipment does cause harmful interference to radio or television reception,which can be determined by turning the equipment off and on, the user is encouraged to try to correct the interference by one or more of the following measures:
-- Reorient or relocate the receiving antenna.
-- Increase the separation between the equipment and receiver.
-- Connect the equipment into an outlet on a circuit different
from that to which the receiver is connected.
-- Consult the dealer or an experienced radio/TV technician for help.
To maintain compliance with FCC’s RF Exposure guidelines, This equipment should be installed and operated with minimum distance between 20cm the radiator your body: Use only the supplied antenna.