FCC TEST REPORT

FOR

Shenzhen Pet Baby Technology Co., LTD

Pet GPS Tracker & Health Monitor

Test Model: C09

Additional Model No.:C09XX

Prepared for	:	Shenzhen Pet Baby Technology Co., LTD
Address	:	504, Building B, Lin guo suo hengmingzhu Industrial Park, Taoyuan Community, Xixiang Street, Baoan District, Shenzhen, China
Prepared by	:	Shenzhen LCS Compliance Testing Laboratory Ltd.
Address	:	101, 201 Bldg A & 301 Bldg C, Juji Industrial Park Yabianxueziwei, Shajing Street, Baoan District, Shenzhen, 518000, China
Tel	:	(+86)755-82591330
Fax	:	(+86)755-82591332
Web	:	www.LCS-cert.com
Mail	:	webmaster@LCS-cert.com
Date of receipt of test sample	:	September 26, 2024
Number of tested samples	:	2
Sample No.	:	A240923093-1, A240923093-2
Serial number	:	Prototype
Date of Test	:	September 26, 2024 ~ October 12, 2024
Date of Report	:	October 12, 2024

FCC PART 22/24/27 TEST REPORT

FCC Part 22H/Part 24E/Part 27

Report Reference No.....:	**LCSA09254055EA**
FCC ID..... :	**XXXX-YYYY**
Date of Issue.....:	**October 12, 2024**
Testing Laboratory Name.....:	**Shenzhen LCS Compliance Testing Laboratory Ltd.**
Address..... :	101, 201 Bldg A & 301 Bldg C, Juji Industrial Park Yabianxueziwei, Shajing Street, Baoan District, Shenzhen, 518000, China
Applicant's name.....:	**Shenzhen Pet Baby Technology Co., LTD**
Address..... :	504, Building B, Lin guo suo hengmingzhu Industrial Park, Taoyuan Community, Xixiang Street, Baoan District, Shenzhen, China
Test specification.....:	
Standard.....:	**FCC CFR Title 47 Part 2, Part 22H, Part 24E, Part 27** **TIA-603-E: 2016** **KDB971168 D01 Power Meas License Digital Systems v03r01**
Test Report Form No..... :	TRF-4-E-153 A/0
TRF Originator.....:	Shenzhen LCS Compliance Testing Laboratory Ltd.
Master TRF.....:	Dated 2011-03

Shenzhen LCS Compliance Testing Laboratory Ltd. All rights reserved.
This publication may be reproduced in whole or in part for non-commercial purposes as long as the Shenzhen LCS Compliance Testing Laboratory Ltd. is acknowledged as copyright owner and source of the material. Shenzhen LCS Compliance Testing Laboratory Ltd. takes no responsibility for and will not assume liability for damages resulting from the reader's interpretation of the reproduced material due to its placement and context.

Test item description.....:	**Pet GPS Tracker & Health Monitor**
Trade Mark.....:	N/A
Test Model..... :	C09
Modulation Type..... :	QPSK,16QAM
Rating.....:	Input: DC 5V, 1A DC 3.7V by Rechargeable Li-ion Battery, 500mAh
Result.....:	**PASS**

Compiled by:	**Supervised by:**	**Approved by:**
Joker.Hu	Cary Luo	Gavin Liang
Joker Hu/ Administrator	Cary Luo/ Technique principal	Gavin Liang/ Manager

TEST REPORT

Test Report No. :	LCSA09254055EA	October 12, 2024 Date of issue

EUT.....	: Pet GPS Tracker & Health Monitor
Test Model.....	: C09
Applicant.....	**: Shenzhen Pet Baby Technology Co., LTD**
Address.....	: 504, Building B, Lin guo suo hengmingzhu Industrial Park, Taoyuan Community, Xixiang Street, Baoan District, Shenzhen, China
Telephone.....	: /
Fax.....	: /
Manufacturer.....	**: Shenzhen Pet Baby Technology Co., LTD**
Address.....	: 504, Building B, Lin guo suo hengmingzhu Industrial Park, Taoyuan Community, Xixiang Street, Baoan District, Shenzhen, China
Telephone.....	: /
Fax.....	: /
Factory.....	**: Shenzhen Pet Baby Technology Co., LTD**
Address.....	: 504, Building B, Lin guo suo hengmingzhu Industrial Park, Taoyuan Community, Xixiang Street, Baoan District, Shenzhen, China
Telephone.....	: /
Fax.....	: /

Test Result:	**PASS**

The test report merely corresponds to the test sample.
It is not permitted to copy extracts of these test result without the written permission of the test laboratory.

Revison History

Report Version	Issue Date	Revision Content	Revised By
000	October 12, 2024	Initial Issue	---

Contents

1 TEST STANDARDS 6

2 SUMMARY 7

2.1 Product Description 7
2.2 Equipment under Test 8
2.3 Short description of the Equipment under Test (EUT) 8
2.4 Support equipment List 8
2.5 External I/O Port 8
2.6 Normal Accessory setting 8
2.7 Test Sample 8
2.8 EUT configuration 9
2.9 Related Submittal(s) / Grant (s) 9
2.10 Modifications 9
2.11 General Test Conditions/Configurations 9

3 TEST ENVIRONMENT 10

3.1 Address of the test laboratory 10
3.2 Test Facility 10
3.3 Environmental conditions 10
3.4 Test Description 10
3.5 Equipments Used during the Test 15
3.6 Measurement uncertainty 16

4 TEST CONDITIONS AND RESULTS 17

4.1 Output Power 17
4.2 Peak-to-Average Ratio (PAR) 32
4.3 Occupied Bandwidth and Emission Bandwidth 33
4.4 Band Edge compliance 34
4.5 Spurious Emssion on Antenna Port 36
4.6 Radiated Spurious Emssion 39
4.7 Frequency Stability under Temperature & Voltage Variations 52

5 TEST SETUP PHOTOS OF THE EUT 60

6 EXTERNAL PHOTOS OF THE EUT 60

7 INTERNAL PHOTOS OF THE EUT 60

1 TEST STANDARDS

The tests were performed according to following standards:
FCC Part 22H: Cellular Radiotelephone Service
FCC Part 24E: Broadband PCS
FCC Part 27: MISCELLANEOUS WIRELESS COMMUNICATIONS SERVICES
TIA-603-E March 2016: Land Mobile FM or PM Communications Equipment Measurement and Performance Standards.
47 CFR FCC Part 15 Subpart B: Unintentional Radiators
FCC Part 2: FREQUENCY ALLOCA-TIONS AND RADIO TREATY MAT-TERS; GENERAL RULES AND REG-ULATIONS
ANSI C63.4:2014: Methods of Measurement of Radio-Noise Emissions from Low-Voltage Electrical and Electronic Equipment in the Range of 9 kHz to 40 GHz
FCC KDB971168 D01 Power Meas License Digital Systems v03r01

2 SUMMARY

2.1 Product Description

The **Shenzhen Pet Baby Technology Co., LTD**'s Model: C09 or the "EUT" as referred to in this report; more general information as follows, for more details, refer to the user's manual of the EUT.

EUT	: Pet GPS Tracker & Health Monitor
Test Model	: C09
Additional Model No.	: C09XX
Model Declaration	: PCB board, structure and internal of these model(s) are the same, So no additional models were tested
Ratings	: Input: DC 5V, 1A DC 3.7V by Rechargeable Li-ion Battery, 500mAh
Hardware Version	: /
Software Version	: /
LTE	:
Support Band	: ☒ E-UTRA Band 2(U.S.-Band) ☒ E-UTRA Band 4(U.S.-Band) ☒ E-UTRA Band 5(U.S.-Band) ☒ E-UTRA Band 7(U.S.-Band) ☒ E-UTRA Band 12(U.S.-Band) ☒ E-UTRA Band 13(U.S.-Band) ☒ E-UTRA Band 17(U.S.-Band) ☒ E-UTRA Band 41(U.S.-Band) ☒ E-UTRA Band 66(U.S.-Band)
LTE Release Version	: R8
Type Of Modulation	: QPSK/16QAM
Antenna Description	: PIFA Antenna 0dBi(max.) For E-UTRA Band 2 0dBi(max.) For E-UTRA Band 4 0dBi(max.) For E-UTRA Band 5 0dBi(max.) For E-UTRA Band 7 0dBi(max.) For E-UTRA Band 12 0dBi(max.) For E-UTRA Band 13 0dBi(max.) For E-UTRA Band 17 0dBi(max.) For E-UTRA Band 41 0dBi(max.) For E-UTRA Band 66
Power Class	: Class 3
Extreme temp. Tolerance	: -30°C to +50°C
Extreme vol. Limits	: 3.3VDC to 4.1VDC (nominal: 3.7VDC)
GPS function	: RX

2.2 Equipment under Test

Power supply system utilised

Power supply voltage	:	●	120V/ 60 Hz	○	115V/60Hz
		○	12 V DC	○	5.0 V DC
		○	Other (specified in blank below)		

2.3 Short description of the Equipment under Test (EUT)

2.4.1 GeneralDescription

Pet GPS Tracker & Health Monitor is subscriber equipment in the LTE system. frequency band is Band II//V. The HSPA/UMTS frequency band is Band II/IV/V. LTE frequency band is band 2/4/5/7/12/13/17/66.The HSPA/UMTS frequency band II and Band IV and Band V test data included in this report. The Pet GPS Tracker & Health Monitor implements such functions as RF signal receiving/transmitting, HSPA/UMTS/LTE protocol processing, video MMS service and etc. Externally it provides SIM card interface.

2.4 Support equipment List

Manufacturer	Description	Model	Serial Number	Certificate
SHENZHEN TIANYIN ELECTRONICS CO., LTD	Power Adapter	TPA-46050200UU	---	FCC

Note: The adapter is supplied by lab and only use tested.

2.5 External I/O Port

I/O Port Description	Quantity	Cable
Power Port	1	N/A

2.6 Normal Accessory setting

Fully charged battery was used during the test.

2.7 Test Sample

The application provides 2 samples to meet requirement;

Sample Number	Description
Sample 1(A240923093-1)	Engineer sample – continuous transmit
Sample 2(A240923093-2)	Normal sample – Intermittent transmit

2.8 EUT configuration

The following peripheral devices and interface cables were connected during the measurement:

- ● - supplied by the manufacturer
- ○ - supplied by the lab

○	Power Cable	Length (m) :	/
		Shield :	/
		Detachable :	/
○	Multimeter	Manufacturer :	/
		Model No. :	/

2.9 Related Submittal(s) / Grant (s)

This submittal(s) (test report) is intended for FCC ID: XXXX-YYYY filing to comply with FCC Part 22, Part 24, Part 27 Rules

2.10 Modifications

No modifications were implemented to meet testing criteria.

2.11 General Test Conditions/Configurations

2.9.1 Test Environment

EnvironmentParameter	SelectedValuesDuringTests	
Relative Humidity	Ambient	
Temperature	TN	Ambient
Voltage	VL	DC 3.3V
	VN	DC 3.7V
	VH	DC 4.1V

NOTE:VL=lower extreme testvoltage VN=nominal voltage
VH=upper extreme testvoltage TN=normal temperature

3 TEST ENVIRONMENT

3.1 Address of the test laboratory

Shenzhen LCS Compliance Testing Laboratory Ltd
101, 201 Bldg A & 301 Bldg C, Juji Industrial Park Yabianxueziwei, Shajing Street, Baoan District, Shenzhen, 518000, China
The sites are constructed in conformance with the requirements of ANSI C63.4 (2014) and CISPR Publication 22.

3.2 Test Facility

The test facility is recognized, certified, or accredited by the following organizations:

NVLAP Accreditation Code is 600167-0.
FCC Designation Number is CN5024.
CAB identifier is CN0071.
CNAS Registration Number is L4595.

3.3 Environmental conditions

During the measurement the environmental conditions were within the listed ranges:

Temperature:	15-35 ° C
Humidity:	30-60 %
Atmospheric pressure:	950-1050mbar

3.4 Test Description

Band 2 (1850-1910MHz pairedwith 1930-1990MHz)

Test Item	FCC Rule No.	Requirements	Verdict
Effective(Isotropic) Radiated Output Power	§2.1046, §24.232	EIRP ≤ 2W	PASS
Peak-Average Ratio	§2.1046, §24.232	FCC:Limit≤13dB	PASS
Modulation Characteristics	§2.1047	Digital modulation	N/A
Bandwidth	§2.1049	OBW: No limit. EBW: No limit.	PASS
Band Edges Compliance	§2.1051, §24.238	≤ -13dBm/1%*EBW, In 1MHz bands immediately outside and adjacent to the frequency block.	PASS
Spurious Emission at Antenna Terminals	§2.1051, §24.238	≤-13dBm/1MHz, from 9kHz to10th harmonics but outside authorized Operating frequency ranges.	PASS
Field Strength of Spurious Radiation	§2.1053, §24.238	≤ -13dBm/1MHz.	PASS
Frequency Stability	§2.1055, §24.235	FCC: within authorized frequency block.	PASS
NOTE 1:For the verdict, the“N/A”denotes“not applicable”,the“N/T”de notes “not tested”.			

Band 4 (1710-1755MHz pairedwith 2110-2155MHz)

Test Item	FCC RuleNo.	Requirements	Verdict
Effective(Isotropic) Radiated Power Output Data	§2.1046, §27.50(d)	EIRP ≤ 1W;	PASS
Peak-Average Ratio	§2.1046, §27.50(d)	Limit≤13dB	Pass
Modulation Characteristics	§2.1047	Digitalmodulation	N/A
Bandwidth	§2.1049	OBW: Nolimit. EBW: Nolimit.	PASS
BandEdges Compliance	§2.1051, §27.53(h)	≤ -13dBm/1%*EBW,in1 MHz bands immediately outside and adjacent to the frequency block.	PASS
Spurious Emission at Antenna Terminals	§2.1051, §27.53(h)	≤ -13dBm/1MHz, from 9kHz to10th harmonics but outside authorized operating frequency ranges.	PASS
Frequency Stability	§2.1055, §27.54	Within authorized bands of operation/frequency block.	PASS
Radiated spurious emission	§2.1053, §27.53(h)	≤ -13dBm/1MHz.	PASS
NOTE 1: For the verdict, the “N/A” denotes “not applicable”, the “N/T” de notes “not tested”			

Band 5 (824-849MHz pairedwith 869-894MHz)

Test Item	FCC Rule No.	Requirements	Verdict
Effective(Isotropic) Radiated Output Power	§2.1046, §22.913	FCC: ERP ≤ 7W.	Pass
Modulation Characteristics	§2.1047	Digital modulation	N/A
Bandwidth	§2.1049	OBW: No limit. EBW: No limit.	Pass
Band Edges Compliance	§2.1051, §22.917	≤-≤ -13dBm/1%*EBW, In 1MHz bands immediately outside and adjacent to The frequency block.	Pass
Spurious Emission at Antenna Terminals	§2.1051, §22.917	FCC: ≤ -13dBm/100kHz, from 9kHz to 10th harmonics but outside authorized operating frequency ranges.	Pass
Field Strength of Spurious Radiation	§2.1053, §22.917	FCC: ≤ -13dBm/100kHz.	Pass
Frequency Stability	§2.1055, §22.355	≤ ±2.5ppm.	Pass
NOTE 1:For the verdict, the“N/A”denotes“not applicable”,the“N/T”de notes “not tested”.			

Band 7 (2500-2570MHz pairedwith 2620-2690MHz)

Test Item	FCC Rule No.	Requirements	Verdict
Effective(Isotropic) Radiated Output Power	§2.1046, §27.50(h)	FCC: EIRP ≤ 2W.	Pass
Peak-AverageRatio	§2.1046, §27.50(a)	Limit≤13dB	Pass
Modulation Characteristics	§2.1047	Digital modulation	N/A
Bandwidth	§2.1049	OBW: No limit. EBW: No limit.	Pass
Band Edges Compliance	§2.1051, §27.53(m)	More details specified in §27.53(m)(4)	Pass
Spurious Emission at Antenna Terminals	§2.1051, §27.53(m)	More details specified in §27.53(m)(4)	Pass
Field Strength of Spurious Radiation	§2.1053, §27.53(m)	More details specified in §27.53(m)(4)	Pass
Frequency Stability	§2.1055, §27.54	≤ ±2.5ppm.	Pass
NOTE 1:For the verdict, the“N/A”denotes“not applicable”,the“N/T”de notes “not tested”.			

Band 12 (699-716MHz paired with 729-746MHz)

Test Item	FCC Rule No.	Requirements	Verdict
Effective(Isotropic) Radiated Power Output Data	§2.1046, §27.50(c)	ERP ≤ 3W;	PASS
Peak-Average Ratio	§2.1046, §27.50(c)	Limit≤13dB	PASS
Modulation Characteristics	§2.1047	Digitalmodulation	N/A
Bandwidth	§2.1049	OBW: Nolimit. EBW: Nolimit.	PASS
BandEdges Compliance	§2.1051, §27.53(g)	≤ -13dBm/1%*EBW,in1 MHz bands immediately outside and adjacent to The frequency block.	PASS
Spurious Emission at Antenna Terminals	§2.1051, §27.53(g)	≤ -13dBm/100KHz, from 9kHz to10th harmonics but outside authorized Operating frequency ranges.	PASS
Frequency Stability	§2.1055, §27.54	Within authorized bands of operation/frequency block.	PASS
Radiatedspurious emission	§2.1053, §27.53(g)	≤ -13dBm/100KHz.	PASS
NOTE 1:For the verdict, the“N/A”denotes“not applicable”,the“N/T”de notes “not tested”.			

Band 13 (777-787MHz paired with 746-756MHz)

Test Item	FCC Rule No.	Requirements	Verdict
Effective(Isotropic) Radiated Power Output Data	§2.1046, §27.50(b)	ERP ≤ 3W;	PASS
Peak-Average Ratio	§2.1046, §27.50(b)	Limit≤13dB	PASS
Modulation Characteristics	§2.1047	Digitalmodulation	N/A
Bandwidth	§2.1049	OBW: Nolimit. EBW: Nolimit.	PASS
BandEdges Compliance	§2.1051, §27.53(c)	≤ -13dBm/1%*EBW,in1 MHz bands immediately outside and adjacent to The frequency block.	PASS
Spurious Emission at Antenna Terminals	§2.1051, §27.53(c)	≤ -13dBm/100KHz, from 9kHz to10th harmonics but outside authorized Operating frequency ranges.	PASS
Frequency Stability	§2.1055, §27.54	Within authorized bands of operation/frequency block.	PASS
Radiatedspurious emission	§2.1053, §27.53(c)	≤ -13dBm/100KHz.	PASS
NOTE 1:For the verdict, the“N/A”denotes“not applicable”,the“N/T”de notes “not tested”.			

Band 17(704-716MHz pairedwith 734-746MHz)

Test Item	FCC Rule No.	Requirements	Verdict
Effective(Isotropic) Radiated Power Output Data	§2.1046, §27.50(b)	ERP ≤ 3W;	PASS
Peak-Average Ratio	§2.1046, §27.50(b)	Limit≤13dB	PASS
Modulation Characteristics	§2.1047	Digitalmodulation	N/A
Bandwidth	§2.1049	OBW: Nolimit. EBW: Nolimit.	PASS
BandEdges Compliance	§2.1051, §27.53(c)	≤ -13dBm/1%*EBW,in1 MHz bands immediately outside and adjacent to The frequency block.	PASS
Spurious Emission at Antenna Terminals	§2.1051, §27.53(c)	≤ -13dBm/100KHz, from 9kHz to10th harmonics but outside authorized Operating frequency ranges.	PASS
Frequency Stability	§2.1055, §27.54	Within authorized bands of operation/frequency block.	PASS
Radiated spurious emission	§2.1053, §27.53(c)	≤ -13dBm/100KHz.	PASS

TDD Band 41(2496-2690MHz)

Test Item	FCC Rule No.	Requirements	Verdict
Effective(Isotropic) Radiated Power Output Data	§2.1046, §27.50(h)	ERP ≤ 2W;	PASS
Peak-Average Ratio	§2.1046, §27.50	Limit≤13dB	PASS
Modulation Characteristics	§2.1047	Digitalmodulation	N/A
Bandwidth	§2.1049	OBW: Nolimit. EBW: Nolimit.	PASS
BandEdges Compliance	§2.1051, §27.53(m)	≤ -13dBm/1%*EBW,in1 MHz bands immediately outside and adjacent to The frequency block.	PASS
Spurious Emission at Antenna Terminals	§2.1051, §27.53(m)	≤ -13dBm/1MHz, from 9kHz to10th harmonics but outside authorized Operating frequency ranges.	PASS
Frequency Stability	§2.1055, §27.54	Within authorized bands of operation/frequency block.	PASS
Radiated spurious emission	§2.1053, §27.53(m)	≤ -25dBm/1MHz.	PASS
NOTE 1:For the verdict, the“N/A”denotes“not applicable”,the“N/T”de notes “not tested”.			

Band 66 (1710-1780MHz pairedwith 2110-2180MHz)

Test Item	FCC RuleNo.	Requirements	Verdict
Effective(Isotropic) Radiated Power Output Data	§2.1046, §27.50(d)	EIRP ≤ 1W;	PASS
Peak-Average Ratio	§2.1046, §27.50(d)	Limit≤13dB	Pass
Modulation Characteristics	§2.1047	Digitalmodulation	N/A
Bandwidth	§2.1049	OBW: Nolimit. EBW: Nolimit.	PASS
Band Edges Compliance	§2.1051, §27.53(g)	≤ -13dBm/1%*EBW,in1 MHz bands immediately outside and adjacent to the frequency block.	PASS
Spurious Emission at Antenna Terminals	§2.1051, §27.53(g)	≤ -13dBm/1MHz, from 9kHz to10th harmonics but outside authorized operating frequency ranges.	PASS
Frequency Stability	§2.1055, §27.54	Within authorized bands of operation/frequency block.	PASS
Radiated spurious emission	§2.1053, §27.53(g)	≤ -13dBm/1MHz.	PASS
NOTE 1: For the verdict, the “N/A” denotes “not applicable”, the “N/T” de notes “not tested”			

3.5 Equipments Used during the Test

Item	Equipment	Manufacturer	Model No.	Serial No.	Cal Date	Due Date
1	Power Meter	R&S	NRVS	100444	2024-06-06	2025-06-05
2	Power Sensor	R&S	NRV-Z81	100458	2024-06-06	2025-06-05
3	Power Sensor	R&S	NRV-Z32	10057	2024-06-06	2025-06-05
4	LTE Test Software	Tonscend	JS1120-1	N/A	N/A	N/A
5	RF Control Unit	Tonscend	JS0806-1	158060009	2023-10-18	2024-10-17
6	MXA Signal Analyzer	Agilent	N9020A	MY51250905	2023-10-18	2024-10-17
7	WIDEBAND RADIO COMMUNICATION TESTER	R&S	CMW 500	103818	2024-06-06	2025-06-05
8	DC Power Supply	Agilent	E3642A	N/A	2023-10-18	2024-10-17
9	EMI Test Software	AUDIX	E3	/	N/A	N/A
10	3m Semi Anechoic Chamber	SIDT FRANKONIA	SAC-3M	03CH03-HY	2024-06-06	2025-06-05
11	Positioning Controller	Max-Full	MF7802BS	MF780208586	N/A	N/A
12	Active Loop Antenna	SCHWARZBECK	FMZB 1519B	00005	2024-07-13	2027-07-12
13	By-log Antenna	SCHWARZBECK	VULB9163	9163-470	2024-08-03	2027-08-02
14	By-log Antenna	SCHWARZBECK	VULB9163	9163-471	2024-08-03	2027-08-02
15	Horn Antenna	SCHWARZBECK	BBHA 9120D	9120D-1925	2024-07-13	2027-07-12
16	Horn Antenna	SCHWARZBECK	BBHA 9120D	9120D-1926	2024-07-13	2027-07-12
17	Broadband Horn Antenna	SCHWARZBECK	BBHA 9170	791	2024-07-13	2027-07-12
18	Broadband Horn Antenna	SCHWARZBECK	BBHA 9170	792	2024-07-13	2027-07-12
19	Broadband Preamplifier	SCHWARZBECK	BBV9719	9719-025	2024-07-30	2025-07-29
20	EMI Test Receiver	R&S	ESR 7	101181	2024-06-06	2025-06-05
21	RS SPECTRUM ANALYZER	R&S	FSP40	100503	2024-06-06	2025-06-05
22	Low-frequency amplifier	SchwarzZBECK	BBV9745	00253	2023-10-18	2024-10-17
23	High-frequency amplifier	JS Denki Pte	PA0118-43	JSPA21009	2023-10-18	2024-10-17
24	6dB Attenuator	/	100W/6dB	1172040	2024-06-06	2025-06-05
26	3dB Attenuator	/	2N-3dB	/	2023-10-18	2024-10-17
27	Temperature & Humidity Chamber	GUANGZHOU GOGNWEN	GDS-100	70932	2024-06-12	2025-06-11
28	EMI Test Software	Farad	EZ	/	N/A	N/A
29	RADIO COMMUNICATION TESTER	R&S	CMU 200	105988	2024-06-06	2025-06-05
30	Antenna Mast	Max-Full	MFA-515BSN	1308572	N/A	N/A

3.6 Measurement uncertainty

The data and results referenced in this document are true and accurate. The reader is cautioned that there may be errors within the calibration limits of the equipment and facilities. The measurement uncertainty was calculated for all measurements listed in this test report acc. to ETSI TR 100 028“Electromagnetic compatibilityand Radio spectrum Matters (ERM);Uncertainties in the measurementof mobile radio equipment characteristics” and is documented in the Shenzhen LCS Compliance Testing Laboratory Ltd.quality system acc. to DIN EN ISO/IEC 17025. Furthermore, component and process variability of devices similar to that tested may result in additional deviation. The manufacturer has the sole responsibility of continued compliance of the device.

Hereafter the best measurement capability for Shenzhen LCS Compliance Testing Laboratory Ltd. is reported:

Test	Range	Measurement Uncertainty	Notes
Radiated Emission	30~1000MHz	3.10 dB	(1)
Radiated Emission	1~18GHz	3.80 dB	(1)
Radiated Emission	18-40GHz	3.90 dB	(1)
Conducted Disturbance	0.15~30MHz	1.63 dB	(1)
Conducted Power	9KHz~18GHz	0.61 dB	(1)
Spurious RF Conducted Emission	9KHz~40GHz	1.22 dB	(1)
Band Edge Compliance of RF Emission	9KHz~40GHz	1.22 dB	(1)
Occuiped Bandwidth	9KHz~40GHz	-	(1)

(1)This uncertainty represents an expanded uncertainty expressed at approximately the 95% confidence level using a coverage factor of k=1.96.

4 TEST CONDITIONS AND RESULTS

4.1 Output Power

TEST APPLICABLE

During the process of testing, the EUT was controlled via R&S Digital Radio Communication tester (CMW 500) to ensure max power transmission and proper modulation. This result contains output power and EIRP measurements for the EUT. In all cases, output power is within the specified limits.

4.1.1. Conducted Output Power

TEST CONFIGURATION

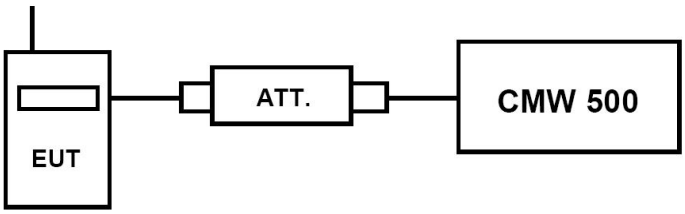

TEST PROCEDURE

Conducted Power Measurement:

a) Place the EUT on a bench and set it in transmitting mode.
b) Connect a low loss RF cable from the antenna port to a CMW 500 by an Att.
c) EUT Communicate with CMW 500 then selects a channel for testing.
d) Add a correction factor to the display CMW 500, and then test.

TEST RESULTS

Remark:

1. *We were tested all RB Configuration refer 3GPP TS136 521 for each Channel Bandwidth of LTE FDD Band 2, LTE FDD Band 4, LTE FDD Band 5, LTE FDD Band 7, LTE FDD Band 12, LTE FDD Band 13, LTE FDD Band 17, LTE FDD Band 41, LTE FDD Band 66; recorded worst case for each Channel Bandwidth of LTE FDD Band 2, LTE FDD Band 4, LTE FDD Band 5, LTE FDD Band 7, LTE FDD Band 12, LTE FDD Band 13, LTE FDD Band 17, LTE FDD Band 41, LTE FDD Band 66.*
2. *For E-UTRA Band 2, please refer to Appendix A: Section A.1*
3. *For E-UTRA Band 4, please refer to Appendix B: Section B.1*
4. *For E-UTRA Band 5, please refer to Appendix C: Section C.1*
5. *For E-UTRA Band 7, please refer to Appendix D: Section D.1*
6. *For E-UTRA Band 12, please refer to Appendix E: Section E.1*
7. *For E-UTRA Band 13, please refer to Appendix F: Section F.1*
8. *For E-UTRA Band 17, please refer to Appendix G: Section G.1*
9. *For E-UTRA Band 41, please refer to Appendix H: Section H.1*
10. *For E-UTRA Band 66, please refer to Appendix I: Section I.1*

4.1.2. Radiated Output Power

LIMIT

This is the test for the maximum radiated power from the EUT.
Per §22.913(2) Extend coverage on a secondary basis into cellular unserved areas, as those areas are defined in §22.949, the ERP of base transmitters and cellular repeaters of such systems must not exceed 1000 Watts. The ERP of mobile transmitters and auxiliary test transmitters must not exceed 7 Watts.
Rule Part 24.232(c) specifies, "Mobile/portable stations are limited to 2 watts e.i.r.p. Peak power" and 24.232(e) specifies that "Peak transmit power must be measured over any interval of continuous transmission using instrumentation calibrated in terms of an rms-equivalent voltage." .
Per Part 27.50(d) (4) specifies, Fixed, mobile, and portable (hand-held) stations operating in the 1710-1755MHz band are limited to 1W EIRP. Fixed stations operating in this band are limited to a maximum antenna height of 10 meters above ground. Mobile and portable stations operating in this band must employ a means for limiting power to the minimum necessary for successful communications.
Per Part 27.50(c) (10)specifies, Portable stations (hand-held devices) in the 600 MHz uplink band and the 698-746 MHz band, and fixed and mobile stations in the 600 MHz uplink band are limited to 3 watts ERP.
Per Part 27.50(h) (2)specifies Mobile and other user stations. Mobile stations are limited to 2.0 watts EIRP. All user stations are limited to 2.0 watts transmitter output power.

TEST CONFIGURATION

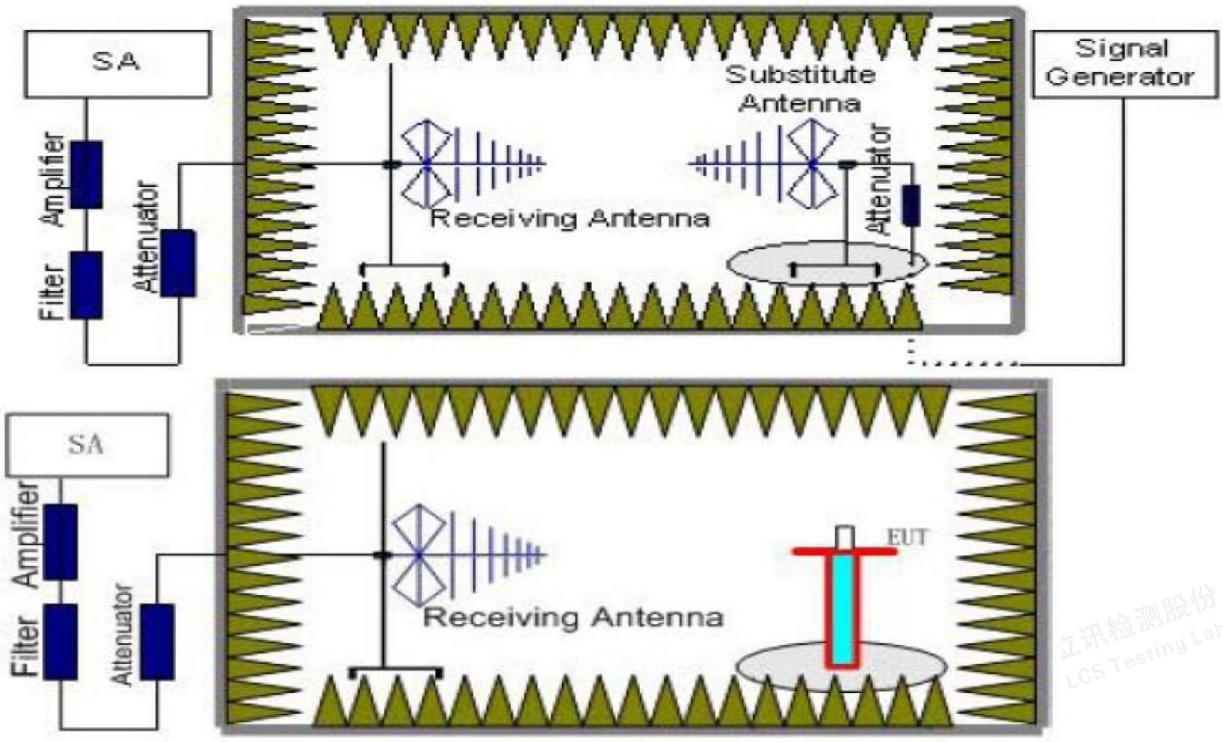

TEST PROCEDURE

1. EUT was placed on a 1.50 meter high non-conductive stand at a 3 meter test distance from the receive antenna. A receiving antenna was placed on the antenna mast 3 meters from the EUT for emission measurements. The height of receiving antenna is 1.50m. Detected emissions were maximized at each frequency by rotating the EUT through 360° and adjusting the receiving antenna polarization. The radiated emission measurements of all transmit frequencies in three channels (High, Middle, Low) were measured with peak detector.
2. A log-periodic antenna or double-ridged waveguide horn antenna shall be substituted in place of the EUT. The log-periodic antenna will be driven by a signal generator and the level will be adjusted till the same power value on the spectrum analyzer or receiver. The level of the spurious emissions can be calculated

through the level of the signal generator, cable loss, the gain of the substitution antenna and the reading of the spectrum analyzer or receiver.

3. The EUT is then put into continuously transmitting mode at its maximum power level during the test.Set Test Receiver or Spectrum RBW=1MHz,VBW=3MHz, And the maximum value of the receiver should be recorded as (P_r).
4. The EUT shall be replaced by a substitution antenna.In the chamber, an substitution antenna for the frequency band of interest is placed at the reference point of the chamber. An RF Signal source for the frequency band of interest is connected to the substitution antenna with a cable that has been constructed to not interfere with the radiation pattern of the antenna. A power (P_{Mea}) is applied to the input of the substitution antenna, and adjust the level of the signal generator output until the value of the receiver reach the previously recorded (P_r). The power of signal source (P_{Mea}) is recorded. The test should be performed by rotating the test item and adjusting the receiving antenna polarization.
5. A amplifier should be connected to the Signal Source output port. And the cable should be connect between the Amplifier and the Substitution Antenna. The cable loss (P_{cl}) ,the Substitution Antenna Gain (G_a) and the Amplifier Gain (P_{Ag}) should be recorded after test.
   The measurement results are obtained as described below:
   Power(EIRP)=P_{Mea}+ P_{Ag} - P_{cl} + G_a
6. This value is EIRP since the measurement is calibrated using an antenna of known gain (2.15 dBi) and known input power.
7. ERP can be calculated from EIRP by subtracting the gain of the dipole, ERP = EIRP-2.15dBi.

TEST RESULTS

Radiated Measurement:

Remark:

1. *We were tested all RB Configuration refer 3GPP TS136 521 for each Channel Bandwidth of LTE FDD Band 2, LTE FDD Band 4, LTE FDD Band 5, LTE FDD Band 7, LTE FDD Band 12, LTE FDD Band 13, LTE FDD Band 17, LTE FDD Band 41, LTE FDD Band 66; recorded worst case for each Channel Bandwidth of LTE FDD Band 2, LTE FDD Band 4, LTE FDD Band 5, LTE FDD Band 7, LTE FDD Band 12, LTE FDD Band 13, LTE FDD Band 17, LTE FDD Band 41, LTE FDD Band 66.*
2. *EIRP=P_{Mea}(dBm)-P_{cl}(dB)+P_{Ag}(dB)+G_a(dBi)*
3. *ERP = EIRP – 2.15dBi as EIRP by subtracting the gain of the dipole.*
4. *Margin = Emission Level - Limit*
5. *We tested the worst-case records for H and V directions, and only the worst-case records for V direction were recorded in the report.*

LTE FDD Band 2_Channel Bandwidth 1.4MHz_QPSK

Frequency (MHz)	P_{Mea} (dBm)	P_{cl} (dB)	G_a Antenna Gain(dB)	P_{Ag} (dB)	Burst Average EIRP (dBm)	Limit (dBm)	Margin (dB)	Polarization
1850.7	-19.57	4.03	8.38	35.51	20.29	33.01	-12.72	V
1880.0	-19.47	4.08	8.33	35.56	20.34	33.01	-12.67	V
1909.3	-19.26	4.14	8.26	35.63	20.49	33.01	-12.52	V

LTE FDD Band 2_Channel Bandwidth 3MHz_QPSK

Frequency (MHz)	P_{Mea} (dBm)	P_{cl} (dB)	G_a Antenna Gain(dB)	P_{Ag} (dB)	Burst Average EIRP (dBm)	Limit (dBm)	Margin (dB)	Polarization
1851.5	-20.18	4.03	8.38	35.51	19.68	33.01	-13.33	V
1880.0	-19.89	4.08	8.33	35.56	19.92	33.01	-13.09	V
1908.5	-19.51	4.14	8.26	35.63	20.24	33.01	-12.77	V

LTE FDD Band 2_Channel Bandwidth 5MHz_QPSK

Frequency (MHz)	P_{Mea} (dBm)	P_{cl} (dB)	G_a Antenna Gain(dB)	P_{Ag} (dB)	Burst Average EIRP (dBm)	Limit (dBm)	Margin (dB)	Polarization
1852.5	-20.22	4.03	8.38	35.51	19.64	33.01	-13.37	V
1880.0	-20.88	4.08	8.33	35.56	18.93	33.01	-14.08	V
1907.5	-20.20	4.14	8.26	35.63	19.55	33.01	-13.46	V

LTE FDD Band 2_Channel Bandwidth 10MHz_QPSK

Frequency (MHz)	P_{Mea} (dBm)	P_{cl} (dB)	G_a Antenna Gain(dB)	P_{Ag} (dB)	Burst Average EIRP (dBm)	Limit (dBm)	Margin (dB)	Polarization
1855.0	-21.21	4.03	8.38	35.51	18.65	33.01	-14.36	V
1880.0	-21.00	4.08	8.33	35.56	18.81	33.01	-14.20	V
1905.0	-20.85	4.14	8.26	35.63	18.90	33.01	-14.11	V

LTE FDD Band 2_Channel Bandwidth 15MHz_QPSK

Frequency (MHz)	P_{Mea} (dBm)	P_{cl} (dB)	G_a Antenna Gain(dB)	P_{Ag} (dB)	Burst Average EIRP (dBm)	Limit (dBm)	Margin (dB)	Polarization
1857.5	-21.84	4.03	8.38	35.51	18.02	33.01	-14.99	V
1880.0	-21.71	4.08	8.33	35.56	18.10	33.01	-14.91	V
1902.5	-21.77	4.14	8.26	35.63	17.98	33.01	-15.03	V

LTE FDD Band 2_Channel Bandwidth 20MHz_QPSK

Frequency (MHz)	P_{Mea} (dBm)	P_{cl} (dB)	G_a Antenna Gain(dB)	P_{Ag} (dB)	Burst Average EIRP (dBm)	Limit (dBm)	Margin (dB)	Polarization
1860.0	-21.55	4.03	8.38	35.51	18.31	33.01	-14.70	V
1880.0	-21.93	4.08	8.33	35.56	17.88	33.01	-15.13	V
1900.0	-21.98	4.14	8.26	35.63	17.77	33.01	-15.24	V

LTE FDD Band 2_Channel Bandwidth 1.4MHz_16QAM

Frequency (MHz)	P_{Mea} (dBm)	P_{cl} (dB)	G_a Antenna Gain(dB)	P_{Ag} (dB)	Burst Average EIRP (dBm)	Limit (dBm)	Margin (dB)	Polarization
1850.7	-20.45	4.03	8.38	35.51	19.41	33.01	-13.60	V
1880.0	-19.82	4.08	8.33	35.56	19.99	33.01	-13.02	V
1909.3	-19.54	4.14	8.26	35.63	20.21	33.01	-12.80	V

LTE FDD Band 2_Channel Bandwidth 3MHz_16QAM

Frequency (MHz)	P_{Mea} (dBm)	P_{cl} (dB)	G_a Antenna Gain(dB)	P_{Ag} (dB)	Burst Average EIRP (dBm)	Limit (dBm)	Margin (dB)	Polarization
1851.5	-20.28	4.03	8.38	35.51	19.58	33.01	-13.43	V
1880.0	-20.95	4.08	8.33	35.56	18.86	33.01	-14.15	V
1908.5	-20.20	4.14	8.26	35.63	19.55	33.01	-13.46	V

LTE FDD Band 2_Channel Bandwidth 5MHz_16QAM

Frequency (MHz)	P_{Mea} (dBm)	P_{cl} (dB)	G_a Antenna Gain(dB)	P_{Ag} (dB)	Burst Average EIRP (dBm)	Limit (dBm)	Margin (dB)	Polarization
1852.5	-21.21	4.03	8.38	35.51	18.65	33.01	-14.36	V
1880.0	-21.20	4.08	8.33	35.56	18.61	33.01	-14.40	V
1907.5	-21.30	4.14	8.26	35.63	18.45	33.01	-14.56	V

LTE FDD Band 2_Channel Bandwidth 10MHz_16QAM

Frequency (MHz)	P_{Mea} (dBm)	P_{cl} (dB)	G_a Antenna Gain(dB)	P_{Ag} (dB)	Burst Average EIRP (dBm)	Limit (dBm)	Margin (dB)	Polarization
1855.0	-21.27	4.03	8.38	35.51	18.59	33.01	-14.42	V
1880.0	-21.30	4.08	8.33	35.56	18.51	33.01	-14.50	V
1905.0	-21.67	4.14	8.26	35.63	18.08	33.01	-14.93	V

LTE FDD Band 2_Channel Bandwidth 15MHz_16QAM

Frequency (MHz)	P_{Mea} (dBm)	P_{cl} (dB)	G_a Antenna Gain(dB)	P_{Ag} (dB)	Burst Average EIRP (dBm)	Limit (dBm)	Margin (dB)	Polarization
1857.5	-22.02	4.03	8.38	35.51	17.84	33.01	-15.17	V
1880.0	-21.50	4.08	8.33	35.56	18.31	33.01	-14.70	V
1902.5	-21.95	4.14	8.26	35.63	17.80	33.01	-15.21	V

LTE FDD Band 2_Channel Bandwidth 20MHz_16QAM

Frequency (MHz)	P_{Mea} (dBm)	P_{cl} (dB)	G_a Antenna Gain(dB)	P_{Ag} (dB)	Burst Average EIRP (dBm)	Limit (dBm)	Margin (dB)	Polarization
1860.0	-22.93	4.03	8.38	35.51	16.93	33.01	-16.08	V
1880.0	-22.75	4.08	8.33	35.56	17.06	33.01	-15.95	V
1900.0	-22.96	4.14	8.26	35.63	16.79	33.01	-16.22	V

LTE FDD Band 4_Channel Bandwidth 1.4MHz_QPSK

Frequency (MHz)	P_{Mea} (dBm)	P_{cl} (dB)	G_a Antenna Gain(dB)	P_{Ag} (dB)	Burst Average EIRP (dBm)	Limit (dBm)	Margin (dB)	Polarization
1710.7	-18.91	3.93	9.05	34.96	21.17	30.00	-8.83	V
1732.5	-19.16	3.93	8.89	35.01	20.81	30.00	-9.19	V
1754.3	-18.62	3.94	8.76	35.08	21.28	30.00	-8.72	V

LTE FDD Band 4_Channel Bandwidth 3MHz_QPSK

Frequency (MHz)	P_{Mea} (dBm)	P_{cl} (dB)	G_a Antenna Gain(dB)	P_{Ag} (dB)	Burst Average EIRP (dBm)	Limit (dBm)	Margin (dB)	Polarization
1711.5	-19.55	3.93	9.05	34.96	20.53	30.00	-9.47	V
1732.5	-18.94	3.93	8.89	35.01	21.03	30.00	-8.97	V
1753.5	-19.05	3.94	8.76	35.08	20.85	30.00	-9.15	V

LTE FDD Band 4_Channel Bandwidth 5MHz_QPSK

Frequency (MHz)	P_{Mea} (dBm)	P_{cl} (dB)	G_a Antenna Gain(dB)	P_{Ag} (dB)	Burst Average EIRP (dBm)	Limit (dBm)	Margin (dB)	Polarization
1712.5	-19.31	3.93	9.05	34.96	20.77	30.00	-9.23	V
1732.5	-19.46	3.93	8.89	35.01	20.51	30.00	-9.49	V
1752.5	-19.31	3.94	8.76	35.08	20.59	30.00	-9.41	V

LTE FDD Band 4_Channel Bandwidth 10MHz_QPSK

Frequency (MHz)	P_{Mea} (dBm)	P_{cl} (dB)	G_a Antenna Gain(dB)	P_{Ag} (dB)	Burst Average EIRP (dBm)	Limit (dBm)	Margin (dB)	Polarization
1715.0	-19.04	3.93	9.05	34.96	21.04	30.00	-8.96	V
1732.5	-19.45	3.93	8.89	35.01	20.52	30.00	-9.48	V
1750.0	-19.37	3.94	8.76	35.08	20.53	30.00	-9.47	V

LTE FDD Band 4_Channel Bandwidth 15MHz_QPSK

Frequency (MHz)	P_{Mea} (dBm)	P_{cl} (dB)	G_a Antenna Gain(dB)	P_{Ag} (dB)	Burst Average EIRP (dBm)	Limit (dBm)	Margin (dB)	Polarization
1717.5	-18.50	3.93	9.05	34.96	21.58	30.00	-8.42	V
1732.5	-19.48	3.93	8.89	35.01	20.49	30.00	-9.51	V
1747.5	-19.43	3.94	8.76	35.08	20.47	30.00	-9.53	V

LTE FDD Band 4_Channel Bandwidth 20MHz_QPSK

Frequency (MHz)	P_{Mea} (dBm)	P_{cl} (dB)	G_a Antenna Gain(dB)	P_{Ag} (dB)	Burst Average EIRP (dBm)	Limit (dBm)	Margin (dB)	Polarization
1720.0	-19.81	3.93	9.05	34.96	20.27	30.00	-9.73	V
1732.5	-19.33	3.93	8.89	35.01	20.64	30.00	-9.36	V
1745.0	-19.08	3.94	8.76	35.08	20.82	30.00	-9.18	V

LTE FDD Band 4_Channel Bandwidth 1.4MHz_16QAM

Frequency (MHz)	P_{Mea} (dBm)	P_{cl} (dB)	G_a Antenna Gain(dB)	P_{Ag} (dB)	Burst Average EIRP (dBm)	Limit (dBm)	Margin (dB)	Polarization
1710.7	-19.24	3.93	9.05	34.96	20.84	30.00	-9.16	V
1732.5	-19.21	3.93	8.89	35.01	20.76	30.00	-9.24	V
1754.3	-19.09	3.94	8.76	35.08	20.81	30.00	-9.19	V

LTE FDD Band 4_Channel Bandwidth 3MHz_16QAM

Frequency (MHz)	P_{Mea} (dBm)	P_{cl} (dB)	G_a Antenna Gain(dB)	P_{Ag} (dB)	Burst Avergae EIRP (dBm)	Limit (dBm)	Margin (dB)	Polarization
1711.5	-19.39	3.93	9.05	34.96	20.69	30.00	-9.31	V
1732.5	-18.86	3.93	8.89	35.01	21.11	30.00	-8.89	V
1753.5	-18.75	3.94	8.76	35.08	21.15	30.00	-8.85	V

LTE FDD Band 4_Channel Bandwidth 5MHz_16QAM

Frequency (MHz)	P_{Mea} (dBm)	P_{cl} (dB)	G_a Antenna Gain(dB)	P_{Ag} (dB)	Burst Average EIRP (dBm)	Limit (dBm)	Margin (dB)	Polarization
1712.5	-19.89	3.93	9.05	34.96	20.19	30.00	-9.81	V
1732.5	-19.61	3.93	8.89	35.01	20.36	30.00	-9.64	V
1752.5	-19.61	3.94	8.76	35.08	20.29	30.00	-9.71	V

LTE FDD Band 4_Channel Bandwidth 10MHz_16QAM

Frequency (MHz)	P_{Mea} (dBm)	P_{cl} (dB)	G_a Antenna Gain(dB)	P_{Ag} (dB)	Burst Avergae EIRP (dBm)	Limit (dBm)	Margin (dB)	Polarization
1715.0	-19.23	3.93	9.05	34.96	20.85	30.00	-9.15	V
1732.5	-18.85	3.93	8.89	35.01	21.12	30.00	-8.88	V
1750.0	-19.28	3.94	8.76	35.08	20.62	30.00	-9.38	V

LTE FDD Band 4_Channel Bandwidth 15MHz_16QAM

Frequency (MHz)	P_{Mea} (dBm)	P_{cl} (dB)	G_a Antenna Gain(dB)	P_{Ag} (dB)	Burst Average EIRP (dBm)	Limit (dBm)	Margin (dB)	Polarization
1717.5	-19.08	3.93	9.05	34.96	21.00	30.00	-9.00	V
1732.5	-19.67	3.93	8.89	35.01	20.30	30.00	-9.70	V
1747.5	-19.78	3.94	8.76	35.08	20.12	30.00	-9.88	V

LTE FDD Band 4_Channel Bandwidth 20MHz_16QAM

Frequency (MHz)	P_{Mea} (dBm)	P_{cl} (dB)	G_a Antenna Gain(dB)	P_{Ag} (dB)	Burst Avergae EIRP (dBm)	Limit (dBm)	Margin (dB)	Polarization
1720.0	-19.03	3.93	9.05	34.96	21.05	30.00	-8.95	V
1732.5	-19.29	3.93	8.89	35.01	20.68	30.00	-9.32	V
1745.0	-18.94	3.94	8.76	35.08	20.96	30.00	-9.04	V

LTE FDD Band 5_Channel Bandwidth 1.4MHz_QPSK

Frequency (MHz)	P_{Mea} (dBm)	P_{cl} (dB)	G_a Antenna Gain(dB)	Correction (dB)	P_{Ag} (dB)	Peak ERP (dBm)	Limit (dBm)	Margin (dB)	Polarization
824.70	-16.45	3.45	8.45	2.15	33.79	20.19	38.45	-18.26	V
836.50	-16.31	3.49	8.45	2.15	33.85	20.35	38.45	-18.10	V
848.30	-15.68	3.55	8.36	2.15	33.88	20.86	38.45	-17.59	V

LTE FDD Band 5_Channel Bandwidth 3MHz_QPSK

Frequency (MHz)	P_{Mea} (dBm)	P_{cl} (dB)	G_a Antenna Gain(dB)	Correction (dB)	P_{Ag} (dB)	Peak ERP (dBm)	Limit (dBm)	Margin (dB)	Polarization
825.50	-15.66	3.45	8.45	2.15	33.79	20.98	38.45	-17.47	V
836.50	-16.21	3.49	8.45	2.15	33.85	20.45	38.45	-18.00	V
847.50	-16.22	3.55	8.36	2.15	33.88	20.32	38.45	-18.13	V

LTE FDD Band 5_Channel Bandwidth 5MHz_QPSK

Frequency (MHz)	P_{Mea} (dBm)	P_{cl} (dB)	G_a Antenna Gain(dB)	Correction (dB)	P_{Ag} (dB)	Peak ERP (dBm)	Limit (dBm)	Margin (dB)	Polarization
826.50	-15.78	3.45	8.45	2.15	33.79	20.86	38.45	-17.59	V
836.50	-16.30	3.49	8.45	2.15	33.85	20.36	38.45	-18.09	V
846.50	-16.10	3.55	8.36	2.15	33.88	20.44	38.45	-18.01	V

LTE FDD Band 5_Channel Bandwidth 10MHz_QPSK

Frequency (MHz)	P_{Mea} (dBm)	P_{cl} (dB)	G_a Antenna Gain(dB)	Correction (dB)	P_{Ag} (dB)	Peak ERP (dBm)	Limit (dBm)	Margin (dB)	Polarization
829.00	-15.77	3.45	8.45	2.15	33.79	20.87	38.45	-17.58	V
836.50	-15.68	3.49	8.45	2.15	33.85	20.98	38.45	-17.47	V
844.00	-15.53	3.55	8.36	2.15	33.88	21.01	38.45	-17.44	V

LTE FDD Band 5_Channel Bandwidth 1.4MHz_16QAM

Frequency (MHz)	P_{Mea} (dBm)	P_{cl} (dB)	G_a Antenna Gain(dB)	Correction (dB)	P_{Ag} (dB)	Peak ERP (dBm)	Limit (dBm)	Margin (dB)	Polarization
824.70	-16.54	3.45	8.45	2.15	33.79	20.10	38.45	-18.35	V
836.50	-16.98	3.49	8.45	2.15	33.85	19.68	38.45	-18.77	V
848.30	-17.30	3.55	8.36	2.15	33.88	19.24	38.45	-19.21	V

LTE FDD Band 5_Channel Bandwidth 3MHz_16QAM

Frequency (MHz)	P_{Mea} (dBm)	P_{cl} (dB)	G_a Antenna Gain(dB)	Correction (dB)	P_{Ag} (dB)	Peak ERP (dBm)	Limit (dBm)	Margin (dB)	Polarization
825.50	-17.26	3.45	8.45	2.15	33.79	19.38	38.45	-19.07	V
836.50	-17.21	3.49	8.45	2.15	33.85	19.45	38.45	-19.00	V
847.50	-16.59	3.55	8.36	2.15	33.88	19.95	38.45	-18.50	V

LTE FDD Band 5_Channel Bandwidth 5MHz_16QAM

Frequency (MHz)	P_{Mea} (dBm)	P_{cl} (dB)	G_a Antenna Gain(dB)	Correction (dB)	P_{Ag} (dB)	Peak ERP (dBm)	Limit (dBm)	Margin (dB)	Polarization
826.50	-17.33	3.45	8.45	2.15	33.79	19.31	38.45	-19.14	V
836.50	-16.66	3.49	8.45	2.15	33.85	20.00	38.45	-18.45	V
846.50	-16.50	3.55	8.36	2.15	33.88	20.04	38.45	-18.41	V

LTE FDD Band 5_Channel Bandwidth 10MHz_16QAM

Frequency (MHz)	P_{Mea} (dBm)	P_{cl} (dB)	G_a Antenna Gain(dB)	Correction (dB)	P_{Ag} (dB)	Peak ERP (dBm)	Limit (dBm)	Margin (dB)	Polarization
829.00	-17.40	3.45	8.45	2.15	33.79	19.24	38.45	-19.21	V
836.50	-17.11	3.49	8.45	2.15	33.85	19.55	38.45	-18.90	V
844.00	-17.08	3.55	8.36	2.15	33.88	19.46	38.45	-18.99	V

LTE FDD Band 7_Channel Bandwidth 5MHz_QPSK

Frequency (MHz)	P_{Mea} (dBm)	P_{cl} (dB)	G_a Antenna Gain(dB)	P_{Ag} (dB)	Peak EIRP (dBm)	Limit (dBm)	Margin (dB)	Polarization
2502.5	-18.73	4.32	6.80	36.14	19.89	33.01	-13.12	V
2535.0	-18.48	4.32	6.61	36.17	19.98	33.01	-13.03	V
2567.5	-18.46	4.33	6.57	36.22	20.00	33.01	-13.01	V

LTE FDD Band 7_Channel Bandwidth 10MHz_QPSK

Frequency (MHz)	P_{Mea} (dBm)	P_{cl} (dB)	G_a Antenna Gain(dB)	P_{Ag} (dB)	Peak EIRP (dBm)	Limit (dBm)	Margin (dB)	Polarization
2505.0	-18.34	4.32	6.80	36.14	20.28	33.01	-12.73	V
2535.0	-18.51	4.32	6.61	36.17	19.95	33.01	-13.06	V
2565.0	-18.49	4.33	6.57	36.22	19.97	33.01	-13.04	V

LTE FDD Band 7_Channel Bandwidth 15MHz_QPSK

Frequency (MHz)	P_{Mea} (dBm)	P_{cl} (dB)	G_a Antenna Gain(dB)	P_{Ag} (dB)	Peak EIRP (dBm)	Limit (dBm)	Margin (dB)	Polarization
2507.5	-18.37	4.32	6.80	36.14	20.25	33.01	-12.76	V
2535.0	-18.24	4.32	6.61	36.17	20.22	33.01	-12.79	V
2562.5	-18.96	4.33	6.57	36.22	19.50	33.01	-13.51	V

LTE FDD Band 7_Channel Bandwidth 20MHz_QPSK

Frequency (MHz)	P_{Mea} (dBm)	P_{cl} (dB)	G_a Antenna Gain(dB)	P_{Ag} (dB)	Peak EIRP (dBm)	Limit (dBm)	Margin (dB)	Polarization
2510.0	-18.29	4.32	6.80	36.14	20.33	33.01	-12.68	V
2535.0	-18.89	4.32	6.61	36.17	19.57	33.01	-13.44	V
2560.0	-18.24	4.33	6.57	36.22	20.22	33.01	-12.79	V

LTE FDD Band 7_Channel Bandwidth 5MHz_16QAM

Frequency (MHz)	P_{Mea} (dBm)	P_{cl} (dB)	G_a Antenna Gain(dB)	P_{Ag} (dB)	Peak EIRP (dBm)	Limit (dBm)	Margin (dB)	Polarization
2502.5	-19.80	4.32	6.80	36.14	18.82	33.01	-14.19	V
2535.0	-19.31	4.32	6.61	36.17	19.15	33.01	-13.86	V
2567.5	-19.54	4.33	6.57	36.22	18.92	33.01	-14.09	V

LTE FDD Band 7_Channel Bandwidth 10MHz_16QAM

Frequency (MHz)	P_{Mea} (dBm)	P_{cl} (dB)	G_a Antenna Gain(dB)	P_{Ag} (dB)	Peak EIRP (dBm)	Limit (dBm)	Margin (dB)	Polarization
2505.0	-19.43	4.32	6.80	36.14	19.19	33.01	-13.82	V
2535.0	-19.37	4.32	6.61	36.17	19.09	33.01	-13.92	V
2565.0	-19.04	4.33	6.57	36.22	19.42	33.01	-13.59	V

LTE FDD Band 7_Channel Bandwidth 15MHz_16QAM

Frequency (MHz)	P_{Mea} (dBm)	P_{cl} (dB)	G_a Antenna Gain(dB)	P_{Ag} (dB)	Peak EIRP (dBm)	Limit (dBm)	Margin (dB)	Polarization
2507.5	-19.40	4.32	6.80	36.14	19.22	33.01	-13.79	V
2535.0	-19.27	4.32	6.61	36.17	19.19	33.01	-13.82	V
2562.5	-19.63	4.33	6.57	36.22	18.83	33.01	-14.18	V

LTE FDD Band 7_Channel Bandwidth 20MHz_16QAM

Frequency (MHz)	P_{Mea} (dBm)	P_{cl} (dB)	G_a Antenna Gain(dB)	P_{Ag} (dB)	Peak EIRP (dBm)	Limit (dBm)	Margin (dB)	Polarization
2510.0	-18.94	4.32	6.80	36.14	19.68	33.01	-13.33	V
2535.0	-19.72	4.32	6.61	36.17	18.74	33.01	-14.27	V
2560.0	-19.53	4.33	6.57	36.22	18.93	33.01	-14.08	V

LTE FDD Band 12_Channel Bandwidth 1.4MHz_QPSK

Frequency (MHz)	P_{Mea} (dBm)	P_{cl} (dB)	G_a Antenna Gain (dB)	P_{Ag} (dB)	Correction (dB)	Burst Avergae ERP (dBm)	Limit (dBm)	Margin (dB)	Polarization
699.70	-14.64	3.01	8.29	33.52	2.15	22.01	34.77	-12.76	V
707.50	-14.59	3.02	8.29	33.52	2.15	22.05	34.77	-12.72	V
715.30	-14.44	3.06	8.29	33.52	2.15	22.16	34.77	-12.61	V

LTE FDD Band 12_Channel Bandwidth 3MHz_QPSK

Frequency (MHz)	P_{Mea} (dBm)	P_{cl} (dB)	G_a Antenna Gain (dB)	P_{Ag} (dB)	Correction (dB)	Burst Avergae ERP (dBm)	Limit (dBm)	Margin (dB)	Polarization
700.50	-14.84	3.01	8.29	33.52	2.15	21.81	34.77	-12.96	V
707.50	-14.90	3.02	8.29	33.52	2.15	21.74	34.77	-13.03	V
714.50	-14.79	3.06	8.29	33.52	2.15	21.81	34.77	-12.96	V

LTE FDD Band 12_Channel Bandwidth 5MHz_QPSK

Frequency (MHz)	P_{Mea} (dBm)	P_{cl} (dB)	G_a Antenna Gain (dB)	P_{Ag} (dB)	Correction (dB)	Burst Avergae ERP (dBm)	Limit (dBm)	Margin (dB)	Polarization
701.50	-15.33	3.01	8.29	33.52	2.15	21.32	34.77	-13.45	V
707.50	-15.63	3.02	8.29	33.52	2.15	21.01	34.77	-13.76	V
713.50	-15.45	3.06	8.29	33.52	2.15	21.15	34.77	-13.62	V

LTE FDD Band 12_Channel Bandwidth 10MHz_QPSK

Frequency (MHz)	P_{Mea} (dBm)	P_{cl} (dB)	G_a Antenna Gain (dB)	P_{Ag} (dB)	Correction (dB)	Burst Avergae ERP (dBm)	Limit (dBm)	Margin (dB)	Polarization
704.00	-16.14	3.01	8.29	33.52	2.15	20.51	34.77	-14.26	V
707.50	-15.66	3.02	8.29	33.52	2.15	20.98	34.77	-13.79	V
711.00	-16.32	3.06	8.29	33.52	2.15	20.28	34.77	-14.49	V

LTE FDD Band 12_Channel Bandwidth 1.4MHz_16QAM

Frequency (MHz)	P_{Mea} (dBm)	P_{cl} (dB)	G_a Antenna Gain (dB)	P_{Ag} (dB)	Correction (dB)	Burst Avergae ERP (dBm)	Limit (dBm)	Margin (dB)	Polarization
699.70	-15.06	3.01	8.29	33.52	2.15	21.59	34.77	-13.18	V
707.50	-14.95	3.02	8.29	33.52	2.15	21.69	34.77	-13.08	V
715.30	-15.35	3.06	8.29	33.52	2.15	21.25	34.77	-13.52	V

LTE FDD Band 12_Channel Bandwidth 3MHz_16QAM

Frequency (MHz)	P_{Mea} (dBm)	P_{cl} (dB)	G_a Antenna Gain (dB)	P_{Ag} (dB)	Correction (dB)	Burst Avergae ERP (dBm)	Limit (dBm)	Margin (dB)	Polarization
700.50	-15.14	3.01	8.29	33.52	2.15	21.51	34.77	-13.26	V
707.50	-15.69	3.02	8.29	33.52	2.15	20.95	34.77	-13.82	V
714.50	-15.66	3.06	8.29	33.52	2.15	20.94	34.77	-13.83	V

LTE FDD Band 12_Channel Bandwidth 5MHz_16QAM

Frequency (MHz)	P_{Mea} (dBm)	P_{cl} (dB)	G_a Antenna Gain (dB)	P_{Ag} (dB)	Correction (dB)	Burst Avergae ERP (dBm)	Limit (dBm)	Margin (dB)	Polarization
701.50	-15.87	3.01	8.29	33.52	2.15	20.78	34.77	-13.99	V
707.50	-15.94	3.02	8.29	33.52	2.15	20.70	34.77	-14.07	V
713.50	-16.31	3.06	8.29	33.52	2.15	20.29	34.77	-14.48	V

LTE FDD Band 12_Channel Bandwidth 10MHz_16QAM

Frequency (MHz)	P_{Mea} (dBm)	P_{cl} (dB)	G_a Antenna Gain (dB)	P_{Ag} (dB)	Correction (dB)	Burst Avergae ERP (dBm)	Limit (dBm)	Margin (dB)	Polarization
704.00	-16.06	3.01	8.29	33.52	2.15	20.59	34.77	-14.18	V
707.50	-16.03	3.02	8.29	33.52	2.15	20.61	34.77	-14.16	V
711.00	-16.85	3.06	8.29	33.52	2.15	19.75	34.77	-15.02	V

LTE FDD Band 13_Channel Bandwidth 5MHz_QPSK

Frequency (MHz)	P_{Mea} (dBm)	P_{cl} (dB)	G_a Antenna Gain(dB)	P_{Ag} (dB)	Correction (dB)	ERP (dBm)	Limit (dBm)	Margin (dB)	Polarization
779.5	-17.67	3.21	9.61	33.89	2.15	20.47	34.77	-14.30	V
782.0	-18.06	3.23	9.52	34.74	2.15	20.82	34.77	-13.95	V
784.5	-18.18	3.25	9.43	34.85	2.15	20.70	34.77	-14.07	V

LTE FDD Band 13_Channel Bandwidth 10MHz_QPSK

Frequency (MHz)	P_{Mea} (dBm)	P_{cl} (dB)	G_a Antenna Gain(dB)	P_{Ag} (dB)	Correction (dB)	ERP (dBm)	Limit (dBm)	Margin (dB)	Polarization
782.0	-17.12	3.23	9.52	34.74	2.15	21.76	34.77	-13.01	V

LTE FDD Band 13_Channel Bandwidth 5MHz_16QAM

Frequency (MHz)	P_{Mea} (dBm)	P_{cl} (dB)	G_a Antenna Gain(dB)	P_{Ag} (dB)	Correction (dB)	ERP (dBm)	Limit (dBm)	Margin (dB)	Polarization
779.5	-19.27	3.21	9.61	33.89	2.15	18.87	34.77	-15.90	V
782.0	-19.46	3.23	9.52	34.74	2.15	19.42	34.77	-15.35	V
784.5	-18.88	3.25	9.43	34.85	2.15	20.00	34.77	-14.77	V

LTE FDD Band 13_Channel Bandwidth 10MHz_16QAM

Frequency (MHz)	P_{Mea} (dBm)	P_{cl} (dB)	G_a Antenna Gain(dB)	P_{Ag} (dB)	Correction (dB)	ERP (dBm)	Limit (dBm)	Margin (dB)	Polarization
782.0	-18.13	3.23	9.52	34.74	2.15	20.75	34.77	-14.02	V

LTE FDD Band 17_Channel Bandwidth 5MHz_QPSK

Frequency (MHz)	P_{Mea} (dBm)	P_{cl} (dB)	G_a Antenna Gain(dB)	Correction (dB)	P_{Ag} (dB)	Peak ERP (dBm)	Limit (dBm)	Margin (dB)	Polarization
706.5	-15.62	3.02	8.29	2.15	33.52	21.02	34.77	-13.75	V
710.0	-15.79	3.06	8.29	2.15	33.52	20.81	34.77	-13.96	V
713.5	-15.56	3.06	8.29	2.15	33.52	21.04	34.77	-13.73	V

LTE FDD Band 17_Channel Bandwidth 10MHz_QPSK

Frequency (MHz)	P_{Mea} (dBm)	P_{cl} (dB)	G_a Antenna Gain(dB)	Correction (dB)	P_{Ag} (dB)	Peak ERP (dBm)	Limit (dBm)	Margin (dB)	Polarization
709.0	-16.46	3.06	8.29	2.15	33.52	20.14	34.77	-14.63	V
710.0	-15.90	3.06	8.29	2.15	33.52	20.70	34.77	-14.07	V
711.0	-15.91	3.06	8.29	2.15	33.52	20.69	34.77	-14.08	V

LTE FDD Band 17_Channel Bandwidth 5MHz_16QAM

Frequency (MHz)	P_{Mea} (dBm)	P_{cl} (dB)	G_a Antenna Gain(dB)	Correction (dB)	P_{Ag} (dB)	Peak ERP (dBm)	Limit (dBm)	Margin (dB)	Polarization
706.5	-17.29	3.02	8.29	2.15	33.52	19.35	34.77	-15.42	V
710.0	-16.35	3.06	8.29	2.15	33.52	20.25	34.77	-14.52	V
713.5	-16.69	3.06	8.29	2.15	33.52	19.91	34.77	-14.86	V

LTE FDD Band 17_Channel Bandwidth 10MHz_16QAM

Frequency (MHz)	P_{Mea} (dBm)	P_{cl} (dB)	G_a Antenna Gain(dB)	Correction (dB)	P_{Ag} (dB)	Peak ERP (dBm)	Limit (dBm)	Margin (dB)	Polarization
709.0	-16.42	3.06	8.29	2.15	33.52	20.18	34.77	-14.59	V
710.0	-17.28	3.06	8.29	2.15	33.52	19.32	34.77	-15.45	V
711.0	-16.31	3.06	8.29	2.15	33.52	20.29	34.77	-14.48	V

LTE TDD Band 41_Channel Bandwidth 5MHz_QPSK

Frequency (MHz)	P_{Mea} (dBm)	P_{cl} (dB)	G_a Antenna Gain(dB)	P_{Ag} (dB)	Burst Average EIRP (dBm)	Limit (dBm)	Margin (dB)	Polarization
2498.5	-18.84	4.32	6.80	36.13	19.77	30.00	-10.23	V
2593.0	-18.96	4.36	6.55	36.26	19.49	30.00	-10.51	V
2687.5	-18.90	4.51	6.37	36.54	19.50	30.00	-10.50	V

LTE TDD Band 41_Channel Bandwidth 10MHz_QPSK

Frequency (MHz)	P_{Mea} (dBm)	P_{cl} (dB)	G_a Antenna Gain(dB)	P_{Ag} (dB)	Burst Average EIRP (dBm)	Limit (dBm)	Margin (dB)	Polarization
2501.0	-18.18	4.32	6.80	36.13	20.43	30.00	-9.57	V
2593.0	-18.77	4.36	6.55	36.26	19.68	30.00	-10.32	V
2685.0	-18.51	4.51	6.37	36.54	19.89	30.00	-10.11	V

LTE TDD Band 41_Channel Bandwidth 15MHz_QPSK

Frequency (MHz)	P_{Mea} (dBm)	P_{cl} (dB)	G_a Antenna Gain(dB)	P_{Ag} (dB)	Burst Average EIRP (dBm)	Limit (dBm)	Margin (dB)	Polarization
2503.5	-18.41	4.32	6.80	36.13	20.20	30.00	-9.80	V
2593.0	-18.81	4.36	6.55	36.26	19.64	30.00	-10.36	V
2682.5	-18.65	4.51	6.37	36.54	19.75	30.00	-10.25	V

LTE TDD Band 41_Channel Bandwidth 20MHz_QPSK

Frequency (MHz)	P_{Mea} (dBm)	P_{cl} (dB)	G_a Antenna Gain(dB)	P_{Ag} (dB)	Burst Average EIRP (dBm)	Limit (dBm)	Margin (dB)	Polarization
2506.0	-18.77	4.32	6.80	36.13	19.84	30.00	-10.16	V
2593.0	-18.18	4.36	6.55	36.26	20.27	30.00	-9.73	V
2680.0	-18.16	4.51	6.37	36.54	20.24	30.00	-9.76	V

LTE TDD Band 41_Channel Bandwidth 5MHz_16QAM

Frequency (MHz)	P_{Mea} (dBm)	P_{cl} (dB)	G_a Antenna Gain(dB)	P_{Ag} (dB)	Burst Average EIRP (dBm)	Limit (dBm)	Margin (dB)	Polarization
2498.5	-19.78	4.32	6.80	36.13	18.83	30.00	-11.17	V
2593.0	-19.66	4.36	6.55	36.26	18.79	30.00	-11.21	V
2687.5	-19.85	4.51	6.37	36.54	18.55	30.00	-11.45	V

LTE TDD Band 41_Channel Bandwidth 10MHz_16QAM

Frequency (MHz)	P_{Mea} (dBm)	P_{cl} (dB)	G_a Antenna Gain(dB)	P_{Ag} (dB)	Burst Average EIRP (dBm)	Limit (dBm)	Margin (dB)	Polarization
2501.0	-19.40	4.32	6.80	36.13	19.21	30.00	-10.79	V
2593.0	-19.65	4.36	6.55	36.26	18.80	30.00	-11.20	V
2685.0	-19.69	4.51	6.37	36.54	18.71	30.00	-11.29	V

LTE TDD Band 41_Channel Bandwidth 15MHz_16QAM

Frequency (MHz)	P_{Mea} (dBm)	P_{cl} (dB)	G_a Antenna Gain(dB)	P_{Ag} (dB)	Burst Average EIRP (dBm)	Limit (dBm)	Margin (dB)	Polarization
2503.5	-19.36	4.32	6.80	36.13	19.25	30.00	-10.75	V
2593.0	-19.10	4.36	6.55	36.26	19.35	30.00	-10.65	V
2682.5	-19.85	4.51	6.37	36.54	18.55	30.00	-11.45	V

LTE TDD Band 41_Channel Bandwidth 20MHz_16QAM

Frequency (MHz)	P_{Mea} (dBm)	P_{cl} (dB)	G_a Antenna Gain(dB)	P_{Ag} (dB)	Burst Average EIRP (dBm)	Limit (dBm)	Margin (dB)	Polarization
2506.0	-19.46	4.32	6.80	36.13	19.15	30.00	-10.85	V
2593.0	-19.01	4.36	6.55	36.26	19.44	30.00	-10.56	V
2680.0	-19.37	4.51	6.37	36.54	19.03	30.00	-10.97	V

LTE FDD Band 66_Channel Bandwidth 1.4MHz_QPSK

Frequency (MHz)	P_{Mea} (dBm)	P_{cl} (dB)	G_a Antenna Gain(dB)	P_{Ag} (dB)	Burst Average EIRP (dBm)	Limit (dBm)	Margin (dB)	Polarization
1710.7	-18.90	3.93	9.05	34.96	21.18	30.00	-8.82	V
1745.0	-19.04	3.93	8.89	35.01	20.93	30.00	-9.07	V
1779.3	-18.68	3.94	8.76	35.08	21.22	30.00	-8.78	V

LTE FDD Band 66_Channel Bandwidth 3MHz_QPSK

Frequency (MHz)	P_{Mea} (dBm)	P_{cl} (dB)	G_a Antenna Gain(dB)	P_{Ag} (dB)	Burst Average EIRP (dBm)	Limit (dBm)	Margin (dB)	Polarization
1711.5	-19.03	3.93	9.05	34.96	21.05	30.00	-8.95	V
1745.0	-19.43	3.93	8.89	35.01	20.54	30.00	-9.46	V
1778.5	-19.39	3.94	8.76	35.08	20.51	30.00	-9.49	V

LTE FDD Band 66_Channel Bandwidth 5MHz_QPSK

Frequency (MHz)	P_{Mea} (dBm)	P_{cl} (dB)	G_a Antenna Gain(dB)	P_{Ag} (dB)	Burst Average EIRP (dBm)	Limit (dBm)	Margin (dB)	Polarization
1712.5	-19.19	3.93	9.05	34.96	20.89	30.00	-9.11	V
1745.0	-19.11	3.93	8.89	35.01	20.86	30.00	-9.14	V
1777.5	-19.28	3.94	8.76	35.08	20.62	30.00	-9.38	V

LTE FDD Band 66_Channel Bandwidth 10MHz_QPSK

Frequency (MHz)	P_{Mea} (dBm)	P_{cl} (dB)	G_a Antenna Gain(dB)	P_{Ag} (dB)	Burst Average EIRP (dBm)	Limit (dBm)	Margin (dB)	Polarization
1715.0	-19.54	3.93	9.05	34.96	20.54	30.00	-9.46	V
1745.0	-19.86	3.93	8.89	35.01	20.11	30.00	-9.89	V
1775.0	-19.14	3.94	8.76	35.08	20.76	30.00	-9.24	V

LTE FDD Band 66_Channel Bandwidth 15MHz_QPSK

Frequency (MHz)	P_{Mea} (dBm)	P_{cl} (dB)	G_a Antenna Gain(dB)	P_{Ag} (dB)	Burst Average EIRP (dBm)	Limit (dBm)	Margin (dB)	Polarization
1717.5	-18.68	3.93	9.05	34.96	21.40	30.00	-8.60	V
1745.0	-18.96	3.93	8.89	35.01	21.01	30.00	-8.99	V
1772.5	-18.86	3.94	8.76	35.08	21.04	30.00	-8.96	V

LTE FDD Band 66_Channel Bandwidth 20MHz_QPSK

Frequency (MHz)	P_{Mea} (dBm)	P_{cl} (dB)	G_a Antenna Gain(dB)	P_{Ag} (dB)	Burst Average EIRP (dBm)	Limit (dBm)	Margin (dB)	Polarization
1720.0	-19.47	3.93	9.05	34.96	20.61	30.00	-9.39	V
1745.0	-19.18	3.93	8.89	35.01	20.79	30.00	-9.21	V
1770.0	-18.97	3.94	8.76	35.08	20.93	30.00	-9.07	V

LTE FDD Band 66_Channel Bandwidth 1.4MHz_16QAM

Frequency (MHz)	P_{Mea} (dBm)	P_{cl} (dB)	G_a Antenna Gain(dB)	P_{Ag} (dB)	Burst Average EIRP (dBm)	Limit (dBm)	Margin (dB)	Polarization
1710.7	-19.06	3.93	9.05	34.96	21.02	30.00	-8.98	V
1745.0	-19.30	3.93	8.89	35.01	20.67	30.00	-9.33	V
1779.3	-18.92	3.94	8.76	35.08	20.98	30.00	-9.02	V

LTE FDD Band 66_Channel Bandwidth 3MHz_16QAM

Frequency (MHz)	P_{Mea} (dBm)	P_{cl} (dB)	G_a Antenna Gain(dB)	P_{Ag} (dB)	Burst Avergae EIRP (dBm)	Limit (dBm)	Margin (dB)	Polarization
1711.5	-18.71	3.93	9.05	34.96	21.37	30.00	-8.63	V
1745.0	-19.04	3.93	8.89	35.01	20.93	30.00	-9.07	V
1778.5	-18.50	3.94	8.76	35.08	21.40	30.00	-8.60	V

LTE FDD Band 66_Channel Bandwidth 5MHz_16QAM

Frequency (MHz)	P_{Mea} (dBm)	P_{cl} (dB)	G_a Antenna Gain(dB)	P_{Ag} (dB)	Burst Average EIRP (dBm)	Limit (dBm)	Margin (dB)	Polarization
1712.5	-19.65	3.93	9.05	34.96	20.43	30.00	-9.57	V
1745.0	-19.53	3.93	8.89	35.01	20.44	30.00	-9.56	V
1777.5	-19.68	3.94	8.76	35.08	20.22	30.00	-9.78	V

LTE FDD Band 66_Channel Bandwidth 10MHz_16QAM

Frequency (MHz)	P_{Mea} (dBm)	P_{cl} (dB)	G_a Antenna Gain(dB)	P_{Ag} (dB)	Burst Avergae EIRP (dBm)	Limit (dBm)	Margin (dB)	Polarization
1715.0	-18.98	3.93	9.05	34.96	21.10	30.00	-8.90	V
1745.0	-18.89	3.93	8.89	35.01	21.08	30.00	-8.92	V
1775.0	-18.71	3.94	8.76	35.08	21.19	30.00	-8.81	V

LTE FDD Band 66_Channel Bandwidth 15MHz_16QAM

Frequency (MHz)	P_{Mea} (dBm)	P_{cl} (dB)	G_a Antenna Gain(dB)	P_{Ag} (dB)	Burst Average EIRP (dBm)	Limit (dBm)	Margin (dB)	Polarization
1717.5	-19.52	3.93	9.05	34.96	20.56	30.00	-9.44	V
1745.0	-19.55	3.93	8.89	35.01	20.42	30.00	-9.58	V
1772.5	-19.70	3.94	8.76	35.08	20.20	30.00	-9.80	V

LTE FDD Band 66_Channel Bandwidth 20MHz_16QAM

Frequency (MHz)	P_{Mea} (dBm)	P_{cl} (dB)	G_a Antenna Gain(dB)	P_{Ag} (dB)	Burst Avergae EIRP (dBm)	Limit (dBm)	Margin (dB)	Polarization
1720.0	-19.27	3.93	9.05	34.96	20.81	30.00	-9.19	V
1745.0	-18.83	3.93	8.89	35.01	21.14	30.00	-8.86	V
1770.0	-18.67	3.94	8.76	35.08	21.23	30.00	-8.77	V

4.2 Peak-to-Average Ratio (PAR)

LIMIT

The Peak-to-Average Ratio (PAR) of the transmission may not exceed 13 dB.

TEST CONFIGURATION

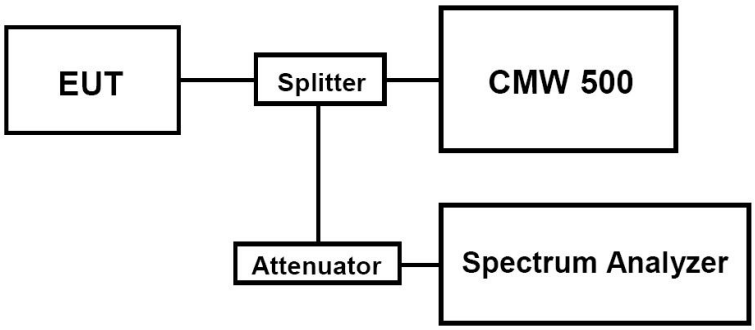

TEST PROCEDURE

1. Refer to instrument's analyzer instruction manual for details on how to use the power statistics/CCDF function;
2. Set resolution/measurement bandwidth ≥ signal's occupied bandwidth;
3. Set the number of counts to a value that stabilizes the measured CCDF curve;
4. Set the measurement interval as follows:
   1). for continuous transmissions, set to 1 ms,
   2). for burst transmissions, employ an external trigger that is synchronized with the EUT burst timing sequence, or use the internal burst trigger with a trigger level that allows the burst to stabilize and set the measurement interval to a time that is less than or equal to the burst duration.
5. Record the maximum PAPR level associated with a probability of 0.1%.

TEST RESULTS

Remark:

1. *We were tested all RB Configuration refer 3GPP TS136 521 for each Channel Bandwidth of LTE FDD Band 2, LTE FDD Band 4, LTE FDD Band 5, LTE FDD Band 7, LTE FDD Band 12, LTE FDD Band 13, LTE FDD Band 17, LTE FDD Band 41, LTE FDD Band 66; recorded worst case for each Channel Bandwidth of LTE FDD Band 2, LTE FDD Band 4, LTE FDD Band 5, LTE FDD Band 7, LTE FDD Band 12, LTE FDD Band 13, LTE FDD Band 17, LTE FDD Band 41, LTE FDD Band 66.*
2. *For E-UTRA Band 2, please refer to Appendix A: Section A.2*
3. *For E-UTRA Band 4, please refer to Appendix B: Section B.2*
4. *For E-UTRA Band 5, please refer to Appendix C: Section C.2*
5. *For E-UTRA Band 7, please refer to Appendix D: Section D.2*
6. *For E-UTRA Band 12, please refer to Appendix E: Section E.2*
7. *For E-UTRA Band 13, please refer to Appendix F: Section F.2*
8. *For E-UTRA Band 17, please refer to Appendix G: Section G.2*
9. *For E-UTRA Band 41, please refer to Appendix H: Section H.2*
10. *For E-UTRA Band 66, please refer to Appendix I: Section I.2*

4.3 Occupied Bandwidth and Emission Bandwidth

LIMIT

N/A

TEST CONFIGURATION

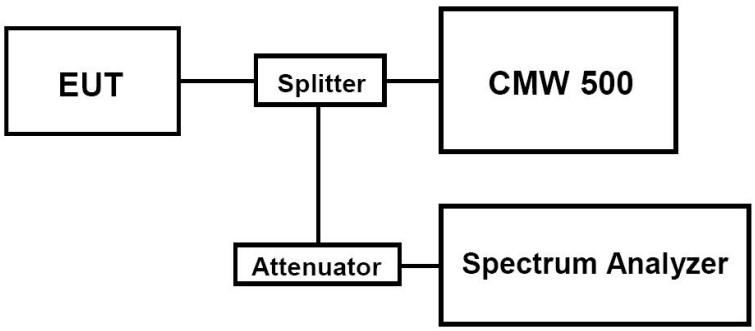

TEST PROCEDURE

The transmitter output was connected to a calibrated coaxial cable and coupler, the other end of which was connected to a spectrum analyzer. The occupied bandwidth was measured with the spectrum analyzer at low, middle and high channel in each band. The -26dBc Emission bandwidth was also measured and recorded.
Set RBW was set to about 1% of emission BW, VBW≥3 times RBW.
-26dBc display line was placed on the screen (or 99% bandwidth), the occupied bandwidth is the delta frequency between the two points where the display line intersects the signal trace.

TEST RESULTS

Remark:

1. *We were tested all RB Configuration refer 3GPP TS136 521 for each Channel Bandwidth of LTE FDD Band 2, LTE FDD Band 4, LTE FDD Band 5, LTE FDD Band 7, LTE FDD Band 12, LTE FDD Band 13, LTE FDD Band 17, LTE FDD Band 41, LTE FDD Band 66; recorded worst case for each Channel Bandwidth of LTE FDD Band 2, LTE FDD Band 4, LTE FDD Band 5, LTE FDD Band 7, LTE FDD Band 12, LTE FDD Band 13, LTE FDD Band 17, LTE FDD Band 41, LTE FDD Band 66.*
2. *For E-UTRA Band 2, please refer to Appendix A: Section A.3*
3. *For E-UTRA Band 4, please refer to Appendix B: Section B.3*
4. *For E-UTRA Band 5, please refer to Appendix C: Section C.3*
5. *For E-UTRA Band 7, please refer to Appendix D: Section D.3*
6. *For E-UTRA Band 12, please refer to Appendix E: Section E.3*
7. *For E-UTRA Band 13, please refer to Appendix F: Section F.3*
8. *For E-UTRA Band 17, please refer to Appendix G: Section G.3*
9. *For E-UTRA Band 41, please refer to Appendix H: Section H.3*
10. *For E-UTRA Band 66, please refer to Appendix I: Section I.3*

4.4 Band Edge compliance

LIMIT

For LTE FDD Band 2:Per FCC §24.238 the power of any emission outside of the authorized operating frequency ranges must be attenuated below the transmitting power (P) by a factor of at least 43 + 10log(P) dB.

For LTE FDD Band 4: Per §27.53(h): For operations in the 1710–1755 MHz and 2110–2155 MHz bands, the power of any emission outside a licensee's frequency block shall be attenuated below the transmitter power (P) by at least 43 + 10 log10(P) dB.

For LTE FDD Band 5:Per FCC §22.917 the power of any emission outside of the authorized operating frequency ranges must be attenuated below the transmitting power (P) by a factor of at least 43 + 10log(P) dB.

For LTE FDD Band 7: Per FCC §27.53 (m)(4): For mobile digital stations, the attenuation factor shall be not less than:
○40+10logP dB (−10 dBm, 100 nW) on all frequencies between the channel edge and 5 MHz from the channel edge,
○43+10logP dB (−13 dBm, 50 nW) on all frequencies between 5 MHz and X MHz from the channel edge, and
○55+10logP dB (−25 dBm, 3 nW) on all frequencies more than X MHz from the channel edge, where X is the greater of 6 MHz or the actual emission bandwidth (26 dB). [§ 27.53(m)(4)]
In addition, the attenuation factor (fixed limit) shall not be less than:
○43+10logP dB on all frequencies between 2490.5 MHz and 2496 MHz, and
○55+10logP dB at or below 2490.5 MHz. [§ 27.53(m)(4)]

For LTE FDD Band 12: Per §27.53 (g): For operations in the 698–746 MHz band, the power of any emission outside a licensee's frequency band(s) of operation shall be attenuated below the transmitter power (P) within the licensed band(s) of operation, measured in watts, by at least 43 + 10 log (P) dB.

For LTE FDD Band 13: Per §27.53 (c): For operations in the 776-788 MHz band, the power of any emission outside the licensee's frequency band(s) of operation shall be attenuated below the transmitter power (P) within the licensed band(s) of operation, measured in watts, in accordance with the following: On any frequency outside the 776-788 MHz band, the power of any emission shall be attenuated outside the band below the transmitter power (P) by at least 43 + 10 log (P) dB;
On all frequencies between 763-775 MHz and 793-805 MHz, by a factor not less than 65 + 10 log (P) dB in a 6.25 kHz band segment, for mobile and portable stations

For LTE FDD Band 17: Per §27.53(g): (g) For operations in the 600 MHz band and the 698-746 MHz band, the power of any emission outside a licensee's frequency band(s) of operation shall be attenuated below the transmitter power (P) within the licensed band(s) of operation, measured in watts, by at least 43 + 10 log (P) dB. Compliance with this provision is based on the use of measurement instrumentation employing a resolution bandwidth of 100 kilohertz or greater. However, in the 100 kilohertz bands immediately outside and adjacent to a licensee's frequency block, a resolution bandwidth of at least 30 kHz may be employed.

For LTE TDD Band 41: Per §27.53 (m)(6) Measurement procedure. Compliance with these rules is based on the use of measurement instrumentation employing a resolution bandwidth of 1 megahertz or greater. However, in the 1 MHz bands immediately outside and adjacent to the frequency block a resolution bandwidth of at least one percent of the emission bandwidth of the fundamental emission of the transmitter may be employed; for mobile digital stations, in the 1 megahertz bands immediately outside and adjacent to the frequency block a resolution bandwidth of at least two percent may be employed, except when the 1 megahertz band is 2495-2496 MHz, in which case a resolution bandwidth of at least one percent may be employed. A narrower resolution bandwidth is permitted in all cases to improve measurement accuracy provided the measured power is integrated over the full required measurement bandwidth (i.e. 1 megahertz or 1 percent of emission bandwidth, as specified; or 1 megahertz or 2 percent for mobile digital stations, except in the band 2495-2496 MHz). The emission bandwidth is defined as the width of the signal between two points, one below the carrier center frequency and one above the carrier center frequency, outside of which all

emissions are attenuated at least 26 dB below the transmitter power. With respect to television operations, measurements must be made of the separate visual and aural operating powers at sufficiently frequent intervals to ensure compliance with the rules.
(m)(4) For mobile digital stations, the attenuation factor shall be not less than 40 + 10 log (P) dB on all frequencies between the channel edge and 5 megahertz from the channel edge, 43 + 10 log (P) dB on all frequencies between 5 megahertz and X megahertz from the channel edge, and 55 + 10 log (P) dB on all frequencies more than X megahertz from the channel edge, where X is the greater of 6 megahertz or the actual emission bandwidth as defined in paragraph (m)(6) of this section. In addition, the attenuation factor shall not be less that 43 + 10 log (P) dB on all frequencies between 2490.5 MHz and 2496 MHz and 55 + 10 log (P) dB at or below 2490.5 MHz. Mobile Satellite Service licensees operating on frequencies below 2495 MHz may also submit a documented interference complaint against BRS licensees operating on channel BRS Channel 1 on the same terms and conditions as adjacent channel BRS or EBS licensees.Show citation box.

For LTE FDD Band 66: Per §27.53(h): For operations in the 1710–1780 MHz and 2110–2200 MHz bands, the power of any emission outside a licensee's frequency block shall be attenuated below the transmitter power (P) by at least 43 + 10 log10(P) dB.

TEST CONFIGURATION

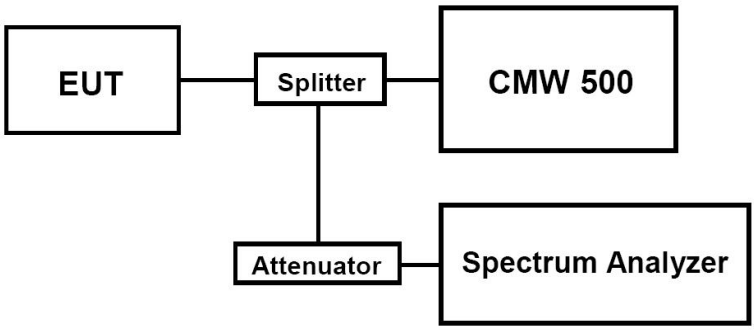

TEST PROCEDURE

1. The transmitter output port was connected to base station.
2. The RF output of EUT was connected to the power meter by RF cable and attenuator, the path loss was compensated to the results for each measurement.
3. Set EUT at maximum power through base station.
4. Select lowestand highest channels for each band and different modulation.
5. Measure Band edge using RMS (Average) detector by spectrum

TEST RESULTS

Remark:
1. *We were tested all RB Configuration refer 3GPP TS136 521 for each Channel Bandwidth of LTE FDD Band 2, LTE FDD Band 4, LTE FDD Band 5, LTE FDD Band 7, LTE FDD Band 12, LTE FDD Band 13, LTE FDD Band 17, LTE FDD Band 41, LTE FDD Band 66; recorded worst case for each Channel Bandwidth of LTE FDD Band 2, LTE FDD Band 4, LTE FDD Band 5, LTE FDD Band 7, LTE FDD Band 12, LTE FDD Band 13, LTE FDD Band 17, LTE FDD Band 41, LTE FDD Band 66.*
2. *For E-UTRA Band 2, please refer to Appendix A: Section A.4*
3. *For E-UTRA Band 4, please refer to Appendix B: Section B.4*
4. *For E-UTRA Band 5, please refer to Appendix C: Section C.4*
5. *For E-UTRA Band 7, please refer to Appendix D: Section D.4*
6. *For E-UTRA Band 12, please refer to Appendix E: Section E.4*
7. *For E-UTRA Band 13, please refer to Appendix F: Section F.4*
8. *For E-UTRA Band 17, please refer to Appendix G: Section G.4*
9. *For E-UTRA Band 41, please refer to Appendix H: Section H.4*
10. *For E-UTRA Band 66, please refer to Appendix I: Section I.4*

4.5 Spurious Emssion on Antenna Port

LIMIT

For LTE FDD Band 2:Per FCC §24.238 the power of any emission outside of the authorized operating frequency ranges must be attenuated below the transmitting power (P) by a factor of at least 43 + 10log(P) dB.

For LTE FDD Band 4: Per §27.53(h): For operations in the 1710–1755 MHz and 2110–2155 MHz bands, the power of any emission outside a licensee's frequency block shall be attenuated below the transmitter power (P) by at least 43 + 10 log10(P) dB.

For LTE FDD Band 5:Per FCC §22.917 the power of any emission outside of the authorized operating frequency ranges must be attenuated below the transmitting power (P) by a factor of at least 43 + 10log(P) dB.

For LTE FDD Band 7: Per FCC §27.53 (m)(4): For mobile digital stations, the attenuation factor shall be not less than:
○40+10logP dB (−10 dBm, 100 nW) on all frequencies between the channel edge and 5 MHz from the channel edge,
○43+10logP dB (−13 dBm, 50 nW) on all frequencies between 5 MHz and X MHz from the channel edge, and
○55+10logP dB (−25 dBm, 3 nW) on all frequencies more than X MHz from the channel edge, where X is the greater of 6 MHz or the actual emission bandwidth (26 dB). [§ 27.53(m)(4)]
In addition, the attenuation factor (fixed limit) shall not be less than:
○43+10logP dB on all frequencies between 2490.5 MHz and 2496 MHz, and
○55+10logP dB at or below 2490.5 MHz. [§ 27.53(m)(4)]

For LTE FDD Band 12: Per §27.53 (g): For operations in the 698–746 MHz band, the power of any emission outside a licensee's frequency band(s) of operation shall be attenuated below the transmitter power (P) within the licensed band(s) of operation, measured in watts, by at least 43 + 10 log (P) dB.

For LTE FDD Band 13: Per §27.53 (c): For operations in the 776-788 MHz band, the power of any emission outside the licensee's frequency band(s) of operation shall be attenuated below the transmitter power (P) within the licensed band(s) of operation, measured in watts, in accordance with the following: On any frequency outside the 776-788 MHz band, the power of any emission shall be attenuated outside the band below the transmitter power (P) by at least 43 + 10 log (P) dB;
On all frequencies between 763-775 MHz and 793-805 MHz, by a factor not less than 65 + 10 log (P) dB in a 6.25 kHz band segment, for mobile and portable stations;

For LTE FDD Band 17: Per §27.53(g): (g) For operations in the 600 MHz band and the 698-746 MHz band, the power of any emission outside a licensee's frequency band(s) of operation shall be attenuated below the transmitter power (P) within the licensed band(s) of operation, measured in watts, by at least 43 + 10 log (P) dB. Compliance with this provision is based on the use of measurement instrumentation employing a resolution bandwidth of 100 kilohertz or greater. However, in the 100 kilohertz bands immediately outside and adjacent to a licensee's frequency block, a resolution bandwidth of at least 30 kHz may be employed.

For LTE TDD Band 41: Per §27.53 (m)(6) Measurement procedure. Compliance with these rules is based on the use of measurement instrumentation employing a resolution bandwidth of 1 megahertz or greater. However, in the 1 MHz bands immediately outside and adjacent to the frequency block a resolution bandwidth of at least one percent of the emission bandwidth of the fundamental emission of the transmitter may be employed; for mobile digital stations, in the 1 megahertz bands immediately outside and adjacent to the frequency block a resolution bandwidth of at least two percent may be employed, except when the 1 megahertz band is 2495-2496 MHz, in which case a resolution bandwidth of at least one percent may be employed. A narrower resolution bandwidth is permitted in all cases to improve measurement accuracy provided the measured power is integrated over the full required measurement bandwidth (i.e. 1 megahertz or 1 percent of emission bandwidth, as specified; or 1 megahertz or 2 percent for mobile digital stations, except in the band 2495-2496 MHz). The emission bandwidth is defined as the width of the signal between two points, one below the carrier center frequency and one above the carrier center frequency, outside of which all emissions are attenuated at least 26 dB below the transmitter power. With respect to television operations, measurements must be made of the separate visual and aural operating powers at sufficiently frequent intervals to ensure compliance with the rules.

(m)(4) For mobile digital stations, the attenuation factor shall be not less than 40 + 10 log (P) dB on all frequencies between the channel edge and 5 megahertz from the channel edge, 43 + 10 log (P) dB on all frequencies between 5 megahertz and X megahertz from the channel edge, and 55 + 10 log (P) dB on all frequencies more than X megahertz from the channel edge, where X is the greater of 6 megahertz or the actual emission bandwidth as defined in paragraph (m)(6) of this section. In addition, the attenuation factor shall not be less that 43 + 10 log (P) dB on all frequencies between 2490.5 MHz and 2496 MHz and 55 + 10 log (P) dB at or below 2490.5 MHz. Mobile Satellite Service licensees operating on frequencies below 2495 MHz may also submit a documented interference complaint against BRS licensees operating on channel BRS Channel 1 on the same terms and conditions as adjacent channel BRS or EBS licensees.Show citation box.

For LTE FDD Band 66: Per §27.53(h): For operations in the 1710–1780 MHz and 2110–2200 MHz bands, the power of any emission outside a licensee's frequency block shall be attenuated below the transmitter power (P) by at least 43 + 10 log10(P) dB.

TEST CONFIGURATION

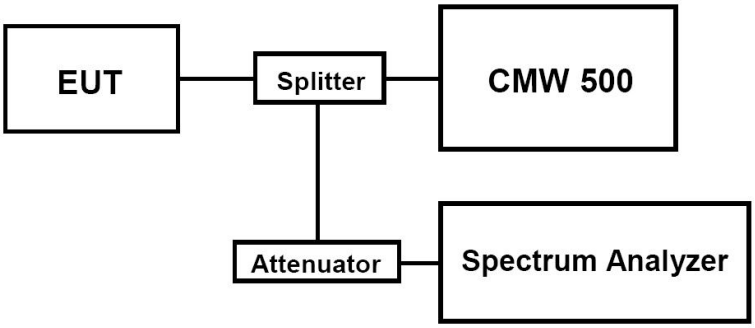

TEST PROCEDURE

The EUT was setup according to TIA-603-E

a. Place the EUT on a bench and set it in transmitting mode.
b. Connect a low loss RF cable from the antenna port to a spectrum analyzer and CMW 500 by a Directional Couple.
c. EUT Communicate with CMW 500, then select a channel for testing.
d. Add a correction factor to the display of spectrum, and then test.
e. The resolution bandwidth of the spectrum analyzer was setsufficient scans were taken to show the out of band Emission if any up to10th harmonic.
f. Please refer to following tables for test antenna conducted emissions.

Working Frequency	Sub range (GHz)	RBW	VBW	Sweep time (s)
LTE FDD Band 2	0.000009~0.000015	1KHz	3KHz	Auto
	0.000015~0.03	10KHz	30KHz	Auto
	0.03~20	1 MHz	3 MHz	Auto
LTE FDD Band 4	0.000009~0.000015	1KHz	3KHz	Auto
	0.000015~0.03	10KHz	30KHz	Auto
	0.03~20	1 MHz	3 MHz	Auto
LTE FDD Band 5	0.000009~0.000015	1KHz	3KHz	Auto
	0.000015~0.03	10KHz	30KHz	Auto
	0.03~10	1 MHz	3 MHz	Auto
LTE FDD Band 7	0.000009~0.000015	1KHz	3KHz	Auto
	0.000015~0.03	10KHz	30KHz	Auto
	0.03~26	1 MHz	3 MHz	Auto
LTE FDD Band 12	0.000009~0.000015	1KHz	3KHz	Auto
	0.000015~0.03	10KHz	30KHz	Auto
	0.03~10	1 MHz	3 MHz	Auto
LTE FDD Band 13	0.000009~0.000015	1KHz	3KHz	Auto

	0.000015~0.03	10KHz	30KHz	Auto
	0.03~16.1	1 MHz	3 MHz	Auto
LTE FDD Band 17	0.000009~0.000015	1KHz	3KHz	Auto
	0.000015~0.03	10KHz	30KHz	Auto
	0.03~10	1 MHz	3 MHz	Auto
LTE FDD Band 41	0.000009~0.000015	1KHz	3KHz	Auto
	0.000015~0.03	10KHz	30KHz	Auto
	0.03~26.5	1 MHz	3 MHz	Auto
LTE FDD Band 66	0.000009~0.000015	1KHz	3KHz	Auto
	0.000015~0.03	10KHz	30KHz	Auto
	0.03~20	1 MHz	3 MHz	Auto

TEST RESULTS

Remark:

1. *We were tested all RB Configuration refer 3GPP TS136 521 for each Channel Bandwidth of LTE FDD Band 2, LTE FDD Band 4, LTE FDD Band 5, LTE FDD Band 7, LTE FDD Band 12, LTE FDD Band 13, LTE FDD Band 17, LTE FDD Band 41, LTE FDD Band 66; recorded worst case for each Channel Bandwidth of LTE FDD Band 2, LTE FDD Band 4, LTE FDD Band 5, LTE FDD Band 7, LTE FDD Band 12, LTE FDD Band 13, LTE FDD Band 17, LTE FDD Band 41, LTE FDD Band 66.*
2. *For E-UTRA Band 2, please refer to Appendix A: Section A.5*
3. *For E-UTRA Band 4, please refer to Appendix B: Section B.5*
4. *For E-UTRA Band 5, please refer to Appendix C: Section C.5*
5. *For E-UTRA Band 7, please refer to Appendix D: Section D.5*
6. *For E-UTRA Band 12, please refer to Appendix E: Section E.5*
7. *For E-UTRA Band 13, please refer to Appendix F: Section F.5*
8. *For E-UTRA Band 17, please refer to Appendix G: Section G.5*
9. *For E-UTRA Band 41, please refer to Appendix H: Section H.5*
10. *For E-UTRA Band 66, please refer to Appendix I: Section I.5*

4.6 Radiated Spurious Emssion

LIMIT

For LTE FDD Band 2:Per FCC §24.238 the power of any emission outside of the authorized operating frequency ranges must be attenuated below the transmitting power (P) by a factor of at least 43 + 10log(P) dB.

For LTE FDD Band 4: Per §27.53(h): For operations in the 1710–1755 MHz and 2110–2155 MHz bands, the power of any emission outside a licensee's frequency block shall be attenuated below the transmitter power (P) by at least 43 + 10 log10(P) dB.

For LTE FDD Band 5:Per FCC §22.917 the power of any emission outside of the authorized operating frequency ranges must be attenuated below the transmitting power (P) by a factor of at least 43 + 10log(P) dB.

For LTE FDD Band 7: Per FCC §27.53 (m)(4): For mobile digital stations, the attenuation factor shall be not less than:
○40+10logP dB (−10 dBm, 100 nW) on all frequencies between the channel edge and 5 MHz from the channel edge,
○43+10logP dB (−13 dBm, 50 nW) on all frequencies between 5 MHz and X MHz from the channel edge, and
○55+10logP dB (−25 dBm, 3 nW) on all frequencies more than X MHz from the channel edge, where X is the greater of 6 MHz or the actual emission bandwidth (26 dB). [§ 27.53(m)(4)]
In addition, the attenuation factor (fixed limit) shall not be less than:
○43+10logP dB on all frequencies between 2490.5 MHz and 2496 MHz, and
○55+10logP dB at or below 2490.5 MHz. [§ 27.53(m)(4)]

For LTE FDD Band 12: Per §27.53 (g): For operations in the 698–746 MHz band, the power of any emission outside a licensee's frequency band(s) of operation shall be attenuated below the transmitter power (P) within the licensed band(s) of operation, measured in watts, by at least 43 + 10 log (P) dB.

For LTE FDD Band 13: Per §27.53 (c): For operations in the 776-788 MHz band, the power of any emission outside the licensee's frequency band(s) of operation shall be attenuated below the transmitter power (P) within the licensed band(s) of operation, measured in watts, in accordance with the following: On any frequency outside the 776-788 MHz band, the power of any emission shall be attenuated outside the band below the transmitter power (P) by at least 43 + 10 log (P) dB;
On all frequencies between 763-775 MHz and 793-805 MHz, by a factor not less than 65 + 10 log (P) dB in a 6.25 kHz band segment, for mobile and portable stations;

For LTE FDD Band 17: Per §27.53(g): (g) For operations in the 600 MHz band and the 698-746 MHz band, the power of any emission outside a licensee's frequency band(s) of operation shall be attenuated below the transmitter power (P) within the licensed band(s) of operation, measured in watts, by at least 43 + 10 log (P) dB. Compliance with this provision is based on the use of measurement instrumentation employing a resolution bandwidth of 100 kilohertz or greater. However, in the 100 kilohertz bands immediately outside and adjacent to a licensee's frequency block, a resolution bandwidth of at least 30 kHz may be employed.

For LTE TDD Band 41: Per §27.53 (m)(6) Measurement procedure. Compliance with these rules is based on the use of measurement instrumentation employing a resolution bandwidth of 1 megahertz or greater. However, in the 1 MHz bands immediately outside and adjacent to the frequency block a resolution bandwidth of at least one percent of the emission bandwidth of the fundamental emission of the transmitter may be employed; for mobile digital stations, in the 1 megahertz bands immediately outside and adjacent to the frequency block a resolution bandwidth of at least two percent may be employed, except when the 1 megahertz band is 2495-2496 MHz, in which case a resolution bandwidth of at least one percent may be employed. A narrower resolution bandwidth is permitted in all cases to improve measurement accuracy provided the measured power is integrated over the full required measurement bandwidth (i.e. 1 megahertz or 1 percent of emission bandwidth, as specified; or 1 megahertz or 2 percent for mobile digital stations, except in the band 2495-2496 MHz). The emission bandwidth is defined as the width of the signal between two points, one below the carrier center frequency and one above the carrier center frequency, outside of which all emissions are attenuated at least 26 dB below the transmitter power. With respect to television operations, measurements must be made of the separate visual and aural operating powers at sufficiently frequent intervals to ensure compliance with the rules.

(m)(4) For mobile digital stations, the attenuation factor shall be not less than 40 + 10 log (P) dB on all frequencies between the channel edge and 5 megahertz from the channel edge, 43 + 10 log (P) dB on all frequencies between 5 megahertz and X megahertz from the channel edge, and 55 + 10 log (P) dB on all frequencies more than X megahertz from the channel edge, where X is the greater of 6 megahertz or the actual emission bandwidth as defined in paragraph (m)(6) of this section. In addition, the attenuation factor shall not be less that 43 + 10 log (P) dB on all frequencies between 2490.5 MHz and 2496 MHz and 55 + 10 log (P) dB at or below 2490.5 MHz. Mobile Satellite Service licensees operating on frequencies below 2495 MHz may also submit a documented interference complaint against BRS licensees operating on channel BRS Channel 1 on the same terms and conditions as adjacent channel BRS or EBS licensees.Show citation box.

For LTE FDD Band 66: Per §27.53(h): For operations in the 1710–1780 MHz and 2110–2200 MHz bands, the power of any emission outside a licensee's frequency block shall be attenuated below the transmitter power (P) by at least 43 + 10 log10(P) dB.

TEST CONFIGURATION

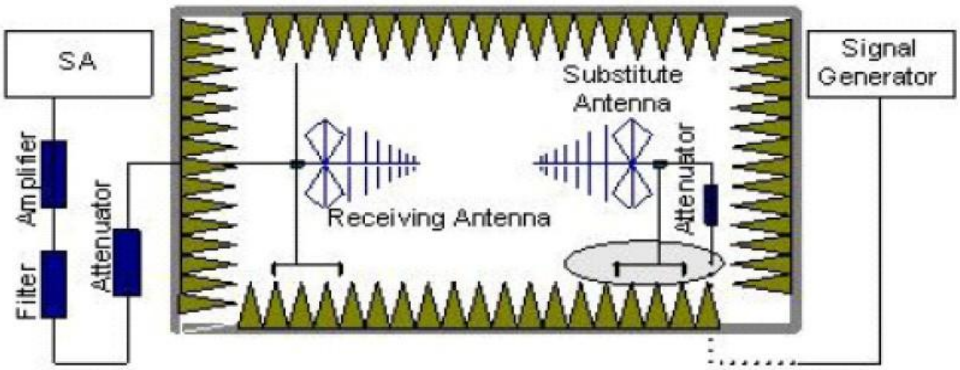

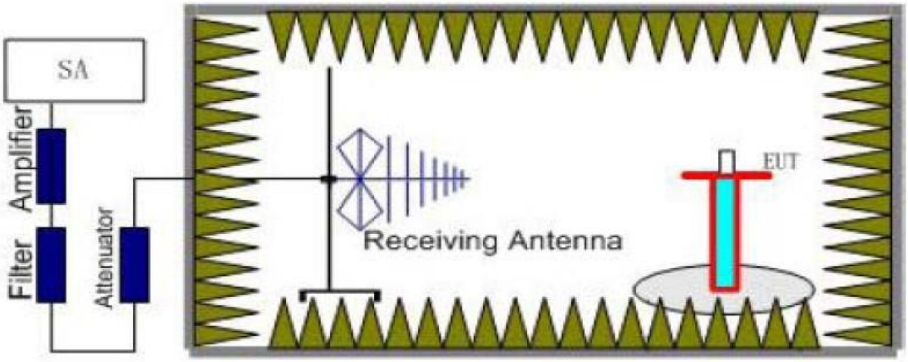

TEST PROCEDURE

1. EUT was placed on a 1.50 meter high non-conductive stand at a 3 meter test distance from the receive antenna. A receiving antenna was placed on the antenna mast 3 meters from the EUT for emission measurements. The height of receiving antenna is 1.50m. Detected emissions were maximized at each frequency by rotating the EUT through 360° and adjusting the receiving antenna polarization. The radiated emission measurements of all transmit frequencies in three channels (High, Middle, Low) were measured with peak detector.
2. A log-periodic antenna or double-ridged waveguide horn antenna shall be substituted in place of the EUT. The log-periodic antenna will be driven by a signal generator and the level will be adjusted till the same power value on the spectrum analyzer or receiver. The level of the spurious emissions can be calculated through the level of the signal generator, cable loss, the gain of the substitution antenna and the reading of the spectrum analyzer or receiver.
3. The EUT is then put into continuously transmitting mode at its maximum power level during the test.Set Test Receiver or Spectrum RBW=1MHz,VBW=3MHz, And the maximum value of the receiver should be recorded as (Pr).

4. The EUT shall be replaced by a substitution antenna.In the chamber, an substitution antenna for the frequency band of interest is placed at the reference point of the chamber. An RF Signal source for the frequency band of interest is connected to the substitution antenna with a cable that has been constructed to not interfere with the radiation pattern of the antenna. A power (PMea) is applied to the input of the substitution antenna, and adjust the level of the signal generator output until the value of the receiver reach the previously recorded (Pr). The power of signal source (PMea) is recorded. The test should be performed by rotating the test item and adjusting the receiving antenna polarization.
5. A amplifier should be connected to the Signal Source output port. And the cable should be connect between the Amplifier and the Substitution Antenna. The cable loss (Pcl) ,the Substitution Antenna Gain (Ga) and the Amplifier Gain (PAg) should be recorded after test.
   The measurement results are obtained as described below:
   Power(EIRP)=PMea+ PAg - Pcl + Ga
6. This value is EIRP since the measurement is calibrated using an antenna of known gain (2.15 dBi) and known input power.
7. ERP can be calculated from EIRP by subtracting the gain of the dipole, ERP = EIRP -2.15dBi.
8. In order to make sure test results more clearly,we set frequency range and sweep time for difference frequency range as follows table:

Working Frequency	Subrange (GHz)	RBW	VBW	Sweep time (s)
LTE FDD Band 2	0.00009~0.15	1KHz	3KHz	30
	0.00015~0.03	10KHz	30KHz	10
	0.03~1	100KHz	300KHz	10
	1~2	1 MHz	3 MHz	2
	2~5	1 MHz	3 MHz	3
	5~8	1 MHz	3 MHz	3
	8~11	1 MHz	3 MHz	3
	11~14	1 MHz	3 MHz	3
	14~18	1 MHz	3 MHz	3
	18~20	1 MHz	3 MHz	2
LTE FDD Band 4	0.00009~0.15	1KHz	3KHz	30
	0.00015~0.03	10KHz	30KHz	10
	0.03~1	100KHz	300KHz	10
	1~2	1 MHz	3 MHz	2
	2~5	1 MHz	3 MHz	3
	5~8	1 MHz	3 MHz	3
	8~11	1 MHz	3 MHz	3
	11~14	1 MHz	3 MHz	3
	14~18	1 MHz	3 MHz	3
LTE FDD Band 5	0.00009~0.15	1KHz	3KHz	30
	0.00015~0.03	10KHz	30KHz	10
	0.03~1	100KHz	300KHz	10
	1~2	1 MHz	3 MHz	2
	2~5	1 MHz	3 MHz	3
	5~8	1 MHz	3 MHz	3
	8~9	1 MHz	3 MHz	3
LTE FDD Band 7	0.00009~0.15	1KHz	3KHz	30
	0.00015~0.03	10KHz	30KHz	10
	0.03~1	100KHz	300KHz	10
	1~2	1 MHz	3 MHz	2
	2~5	1 MHz	3 MHz	3
	5~8	1 MHz	3 MHz	3
	8~11	1 MHz	3 MHz	3
	11~14	1 MHz	3 MHz	3
	14~18	1 MHz	3 MHz	3
	18~20	1 MHz	3 MHz	2
	20~26	1 MHz	3 MHz	2
LTE FDD Band 12	0.00009~0.15	1KHz	3KHz	30

	0.00015~0.03	10KHz	30KHz	10
	0.03~1	100KHz	300KHz	10
	1~2	1 MHz	3 MHz	2
	2~5	1 MHz	3 MHz	3
	5~8	1 MHz	3 MHz	3
LTE FDD Band 13	0.00009~0.15	1KHz	3KHz	30
	0.00015~0.03	10KHz	30KHz	10
	0.03~1	100KHz	300KHz	10
	1~2	1 MHz	3 MHz	2
	2~5	1 MHz	3 MHz	3
	5~8	1 MHz	3 MHz	3
LTE FDD Band 17	0.00009~0.15	1KHz	3KHz	30
	0.00015~0.03	10KHz	30KHz	10
	0.03~1	100KHz	300KHz	10
	1~2	1 MHz	3 MHz	2
	2~5	1 MHz	3 MHz	3
	5~8	1 MHz	3 MHz	3
LTE TDD Band 41	0.00009~0.15	1KHz	3KHz	30
	0.00015~0.03	10KHz	30KHz	10
	0.03~1	100KHz	300KHz	10
	1~2	1 MHz	3 MHz	2
	2~5	1 MHz	3 MHz	3
	5~8	1 MHz	3 MHz	3
	8~11	1 MHz	3 MHz	3
	11~14	1 MHz	3 MHz	3
	14~18	1 MHz	3 MHz	3
	18~20	1 MHz	3 MHz	2
	20~26	1 MHz	3 MHz	2
LTE TDD Band 66	0.00009~0.15	1KHz	3KHz	30
	0.00015~0.03	10KHz	30KHz	10
	0.03~1	100KHz	300KHz	10
	1~2	1 MHz	3 MHz	2
	2~5	1 MHz	3 MHz	3
	5~8	1 MHz	3 MHz	3
	8~11	1 MHz	3 MHz	3
	11~14	1 MHz	3 MHz	3
	14~18	1 MHz	3 MHz	3

Frequency	Channel	Frequency Range	Verdict
LTE FDD Band 2	Low	9KHz -20GHz	PASS
	Middle	9KHz -20GHz	PASS
	High	9KHz -20GHz	PASS
LTE FDD Band 4	Low	9KHz -18GHz	PASS
	Middle	9KHz -18GHz	PASS
	High	9KHz -18GHz	PASS
LTE FDD Band 5	Low	9KHz -9GHz	PASS
	Middle	9KHz -9GHz	PASS
	High	9KHz -9GHz	PASS
LTE FDD Band 7	Low	9KHz -26GHz	PASS
	Middle	9KHz -26GHz	PASS
	High	9KHz -26GHz	PASS
LTE FDD Band 12	Low	9KHz -8GHz	PASS
	Middle	9KHz -8GHz	PASS
	High	9KHz -8GHz	PASS
LTE FDD Band 13	Low	9KHz -8GHz	PASS
	Middle	9KHz -8GHz	PASS
	High	9KHz -8GHz	PASS

LTE FDD Band 17	Low	9KHz -8GHz	PASS
	Middle	9KHz -8GHz	PASS
	High	9KHz -8GHz	PASS
LTE TDD Band 41	Low	9KHz -26GHz	PASS
	Middle	9KHz -26GHz	PASS
	High	9KHz -26GHz	PASS
LTE TDD Band 66	Low	9KHz -18GHz	PASS
	Middle	9KHz -18GHz	PASS
	High	9KHz -18GHz	PASS

TEST RESULTS

Remark:
1. We were tested all RB Configuration refer 3GPP TS136 521 for each Channel Bandwidth of LTE FDD Band 2, LTE FDD Band 4, LTE FDD Band 5, LTE FDD Band 7, LTE FDD Band 12, LTE FDD Band 13, LTE FDD Band 17, LTE FDD Band 41, LTE FDD Band 66; recorded worst case for each Channel Bandwidth of LTE FDD Band 2, LTE FDD Band 4, LTE FDD Band 5, LTE FDD Band 7, LTE FDD Band 12, LTE FDD Band 13, LTE FDD Band 17, LTE FDD Band 41, LTE FDD Band 66.
3. We were not recorded other points as values lower than limits.
4. Power(EIRP)=P_{Mea}+ P_{Ag} - P_{cl} + G_a
5. Margin = EIRP - Limit

Note: All adapteres and all the modes have been tested and recorded worst mode in the report.

LTE FDD Band 2_Channel Bandwidth 20MHz_QPSK_ Low Channel

Frequency (MHz)	P_{Mea} (dBm)	P_{cl} (dB)	Diatance	G_a Antenna Gain(dB)	Peak EIRP (dBm)	Limit (dBm)	Margin (dB)	Polarization
3715.0	-37.76	5.26	3.00	9.88	-33.14	-13.00	-20.14	H
5572.5	-46.28	6.11	3.00	11.36	-41.03	-13.00	-28.03	H
3715.0	-28.79	5.26	3.00	9.88	-24.17	-13.00	-11.17	V
5572.5	-33.87	6.11	3.00	11.36	-28.62	-13.00	-15.62	V

LTE FDD Band 2_Channel Bandwidth 20MHz_QPSK_ Middle Channel

Frequency (MHz)	P_{Mea} (dBm)	P_{cl} (dB)	Diatance	G_a Antenna Gain(dB)	Peak EIRP (dBm)	Limit (dBm)	Margin (dB)	Polarization
3720.0	-38.71	5.32	3.00	10.03	-34.00	-13.00	-21.00	H
5580.0	-43.27	6.19	3.00	11.41	-38.05	-13.00	-25.05	H
3720.0	-29.57	5.32	3.00	10.03	-24.86	-13.00	-11.86	V
5580.0	-33.09	6.19	3.00	11.41	-27.87	-13.00	-14.87	V

LTE FDD Band 2_Channel Bandwidth 20MHz_QPSK_ High Channel

Frequency (MHz)	P_{Mea} (dBm)	P_{cl} (dB)	Diatance	G_a Antenna Gain(dB)	Peak EIRP (dBm)	Limit (dBm)	Margin (dB)	Polarization
3800.0	-39.46	5.36	3.00	9.62	-35.20	-13.00	-22.20	H
5700.0	-45.84	6.24	3.00	11.46	-40.62	-13.00	-27.62	H
3800.0	-29.56	5.36	3.00	9.62	-25.30	-13.00	-12.30	V
5700.0	-33.45	6.24	3.00	11.46	-28.23	-13.00	-15.23	V

LTE FDD Band 2_Channel Bandwidth 20MHz_16QAM _ Low Channel

Frequency (MHz)	P_{Mea} (dBm)	P_{cl} (dB)	Diatance	G_a Antenna Gain(dB)	Peak EIRP (dBm)	Limit (dBm)	Margin (dB)	Polarization
3715.0	-43.21	5.26	3.00	9.88	-38.59	-13.00	-25.59	H
5572.5	-46.96	6.11	3.00	11.36	-41.71	-13.00	-28.71	H
3715.0	-34.59	5.26	3.00	9.88	-29.97	-13.00	-16.97	V
5572.5	-38.66	6.11	3.00	11.36	-33.41	-13.00	-20.41	V

LTE FDD Band 2_Channel Bandwidth 20MHz_16QAM _ Middle Channel

Frequency (MHz)	P_{Mea} (dBm)	P_{cl} (dB)	Diatance	G_a Antenna Gain(dB)	Peak EIRP (dBm)	Limit (dBm)	Margin (dB)	Polarization
3720.0	-42.34	5.32	3.00	10.03	-37.63	-13.00	-24.63	H
5580.0	-49.95	6.19	3.00	11.41	-44.73	-13.00	-31.73	H
3720.0	-33.16	5.32	3.00	10.03	-28.45	-13.00	-15.45	V
5580.0	-39.76	6.19	3.00	11.41	-34.54	-13.00	-21.54	V

LTE FDD Band 2_Channel Bandwidth 20MHz_16QAM _ High Channel

Frequency (MHz)	P_{Mea} (dBm)	P_{cl} (dB)	Diatance	G_a Antenna Gain(dB)	Peak EIRP (dBm)	Limit (dBm)	Margin (dB)	Polarization
3800.0	-40.40	5.36	3.00	9.62	-36.14	-13.00	-23.14	H
5700.0	-46.40	6.24	3.00	11.46	-41.18	-13.00	-28.18	H
3800.0	-32.60	5.36	3.00	9.62	-28.34	-13.00	-15.34	V
5700.0	-39.34	6.24	3.00	11.46	-34.12	-13.00	-21.12	V

LTE FDD Band 4_Channel Bandwidth 20MHz_QPSK_ Low Channel

Frequency (MHz)	P_{Mea} (dBm)	P_{cl} (dB)	Diatance	G_a Antenna Gain(dB)	Peak EIRP (dBm)	Limit (dBm)	Margin (dB)	Polarization
3440.0	-41.65	4.62	3.00	9.81	-36.46	-13.00	-23.46	H
5160.0	-48.81	5.94	3.00	10.86	-43.89	-13.00	-30.89	H
3440.0	-36.77	4.62	3.00	9.81	-31.58	-13.00	-18.58	V
5160.0	-41.68	5.94	3.00	10.86	-36.76	-13.00	-23.76	V

LTE FDD Band 4_Channel Bandwidth 20MHz_QPSK_ Middle Channel

Frequency (MHz)	P_{Mea} (dBm)	P_{cl} (dB)	Diatance	G_a Antenna Gain(dB)	Peak EIRP (dBm)	Limit (dBm)	Margin (dB)	Polarization
3465.0	-41.96	4.63	3.00	9.84	-36.75	-13.00	-23.75	H
5197.5	-48.06	5.94	3.00	10.86	-43.14	-13.00	-30.14	H
3465.0	-33.55	4.63	3.00	9.84	-28.34	-13.00	-15.34	V
5197.5	-41.58	5.94	3.00	10.86	-36.66	-13.00	-23.66	V

LTE FDD Band 4_Channel Bandwidth 20MHz_QPSK_ High Channel

Frequency (MHz)	P_{Mea} (dBm)	P_{cl} (dB)	Diatance	G_a Antenna Gain(dB)	Peak EIRP (dBm)	Limit (dBm)	Margin (dB)	Polarization
3490.0	-43.74	4.65	3.00	9.90	-38.49	-13.00	-25.49	H
5235.0	-46.12	5.95	3.00	10.91	-41.16	-13.00	-28.16	H
3490.0	-34.58	4.65	3.00	9.90	-29.33	-13.00	-16.33	V
5235.0	-40.64	5.95	3.00	10.91	-35.68	-13.00	-22.68	V

LTE FDD Band 4_Channel Bandwidth 20MHz_16QAM _ Low Channel

Frequency (MHz)	P_{Mea} (dBm)	P_{cl} (dB)	Diatance	G_a Antenna Gain(dB)	Peak EIRP (dBm)	Limit (dBm)	Margin (dB)	Polarization
3440.0	-43.41	4.62	3.00	9.81	-38.22	-13.00	-25.22	H
5160.0	-51.19	5.94	3.00	10.86	-46.27	-13.00	-33.27	H
3440.0	-38.89	4.62	3.00	9.81	-33.70	-13.00	-20.70	V
5160.0	-43.83	5.94	3.00	10.86	-38.91	-13.00	-25.91	V

LTE FDD Band 4_Channel Bandwidth 20MHz_16QAM _ Middle Channel

Frequency (MHz)	P_{Mea} (dBm)	P_{cl} (dB)	Diatance	G_a Antenna Gain(dB)	Peak EIRP (dBm)	Limit (dBm)	Margin (dB)	Polarization
3465.0	-44.16	4.63	3.00	9.84	-38.95	-13.00	-25.95	H
5197.5	-51.48	5.94	3.00	10.86	-46.56	-13.00	-33.56	H
3465.0	-36.34	4.63	3.00	9.84	-31.13	-13.00	-18.13	V
5197.5	-44.75	5.94	3.00	10.86	-39.83	-13.00	-26.83	V

LTE FDD Band 4_Channel Bandwidth 20MHz_16QAM _ High Channel

Frequency (MHz)	P_{Mea} (dBm)	P_{cl} (dB)	Diatance	G_a Antenna Gain(dB)	Peak EIRP (dBm)	Limit (dBm)	Margin (dB)	Polarization
3490.0	-46.39	4.65	3.00	9.90	-41.14	-13.00	-28.14	H
5235.0	-49.02	5.95	3.00	10.91	-44.06	-13.00	-31.06	H
3490.0	-36.10	4.65	3.00	9.90	-30.85	-13.00	-17.85	V
5235.0	-43.80	5.95	3.00	10.91	-38.84	-13.00	-25.84	V

LTE FDD Band 5_Channel Bandwidth 10MHz_QPSK_ Low Channel

Frequency (MHz)	P_{Mea} (dBm)	P_{cl} (dB)	Diatance	G_a Antenna Gain(dB)	Peak EIRP (dBm)	Limit (dBm)	Margin (dB)	Polarization
1658.00	-40.61	3.86	3.00	8.56	-35.91	-13.00	-22.91	H
2487.00	-45.59	4.29	3.00	6.98	-42.90	-13.00	-29.90	H
1658.00	-33.11	3.86	3.00	8.56	-28.41	-13.00	-15.41	V
2487.00	-37.42	4.29	3.00	6.98	-34.73	-13.00	-21.73	V

LTE FDD Band 5_Channel Bandwidth 10MHz_QPSK_ Middle Channel

Frequency (MHz)	P_{Mea} (dBm)	P_{cl} (dB)	Diatance	G_a Antenna Gain(dB)	Peak EIRP (dBm)	Limit (dBm)	Margin (dB)	Polarization
1673.00	-40.27	3.90	3.00	8.58	-35.59	-13.00	-22.59	H
2509.50	-46.61	4.32	3.00	6.80	-44.13	-13.00	-31.13	H
1673.00	-36.04	3.90	3.00	8.58	-31.36	-13.00	-18.36	V
2509.50	-38.87	4.32	3.00	6.80	-36.39	-13.00	-23.39	V

LTE FDD Band 5_Channel Bandwidth 10MHz_QPSK_ High Channel

Frequency (MHz)	P_{Mea} (dBm)	P_{cl} (dB)	Diatance	G_a Antenna Gain(dB)	Peak EIRP (dBm)	Limit (dBm)	Margin (dB)	Polarization
1688.00	-39.59	3.91	3.00	9.06	-34.44	-13.00	-21.44	H
2532.00	-44.87	4.32	3.00	6.65	-42.54	-13.00	-29.54	H
1688.00	-34.48	3.91	3.00	9.06	-29.33	-13.00	-16.33	V
2532.00	-38.51	4.32	3.00	6.65	-36.18	-13.00	-23.18	V

LTE FDD Band 5_Channel Bandwidth 10MHz_16QAM _ Low Channel

Frequency (MHz)	P_{Mea} (dBm)	P_{cl} (dB)	Diatance	G_a Antenna Gain(dB)	Peak EIRP (dBm)	Limit (dBm)	Margin (dB)	Polarization
1658.00	-44.18	3.86	3.00	8.56	-39.48	-13.00	-26.48	H
2487.00	-46.28	4.29	3.00	6.98	-43.59	-13.00	-30.59	H
1658.00	-36.25	3.86	3.00	8.56	-31.55	-13.00	-18.55	V
2487.00	-40.30	4.29	3.00	6.98	-37.61	-13.00	-24.61	V

LTE FDD Band 5_Channel Bandwidth 10MHz_16QAM _ Middle Channel

Frequency (MHz)	P_{Mea} (dBm)	P_{cl} (dB)	Diatance	G_a Antenna Gain(dB)	Peak EIRP (dBm)	Limit (dBm)	Margin (dB)	Polarization
1673.00	-41.55	3.90	3.00	8.58	-36.87	-13.00	-23.87	H
2509.50	-49.96	4.32	3.00	6.80	-47.48	-13.00	-34.48	H
1673.00	-36.76	3.90	3.00	8.58	-32.08	-13.00	-19.08	V
2509.50	-40.92	4.32	3.00	6.80	-38.44	-13.00	-25.44	V

LTE FDD Band 5_Channel Bandwidth 10MHz_16QAM _ High Channel

Frequency (MHz)	P_{Mea} (dBm)	P_{cl} (dB)	Diatance	G_a Antenna Gain(dB)	Peak EIRP (dBm)	Limit (dBm)	Margin (dB)	Polarization
1688.00	-44.24	3.91	3.00	9.06	-39.09	-13.00	-26.09	H
2532.00	-48.54	4.32	3.00	6.65	-46.21	-13.00	-33.21	H
1688.00	-37.38	3.91	3.00	9.06	-32.23	-13.00	-19.23	V
2532.00	-40.75	4.32	3.00	6.65	-38.42	-13.00	-25.42	V

LTE FDD Band 7_Channel Bandwidth 20MHz_QPSK_ Low Channel

Frequency (MHz)	P_{Mea} (dBm)	P_{cl} (dB)	Diatance	G_a Antenna Gain(dB)	Peak EIRP (dBm)	Limit (dBm)	Margin (dB)	Polarization
5020.0	-41.37	5.88	3.00	10.77	-36.48	-25.00	-11.48	H
7530.0	-47.02	7.12	3.00	12.26	-41.88	-25.00	-16.88	H
5020.0	-35.01	5.88	3.00	10.77	-30.12	-25.00	-5.12	V
7530.0	-39.49	7.12	3.00	12.26	-34.35	-25.00	-9.35	V

LTE FDD Band 7_Channel Bandwidth 20MHz_QPSK_ Middle Channel

Frequency (MHz)	P_{Mea} (dBm)	P_{cl} (dB)	Diatance	G_a Antenna Gain(dB)	Peak EIRP (dBm)	Limit (dBm)	Margin (dB)	Polarization
5070.0	-38.79	5.90	3.00	10.81	-33.88	-25.00	-8.88	H
7605.0	-44.15	7.19	3.00	12.32	-39.02	-25.00	-14.02	H
5070.0	-36.45	5.90	3.00	10.81	-31.54	-25.00	-6.54	V
7605.0	-38.60	7.19	3.00	12.32	-33.47	-25.00	-8.47	V

LTE FDD 7_Channel Bandwidth 20MHz_QPSK_ High Channel

Frequency (MHz)	P_{Mea} (dBm)	P_{cl} (dB)	Diatance	G_a Antenna Gain(dB)	Peak EIRP (dBm)	Limit (dBm)	Margin (dB)	Polarization
5120.0	-41.31	5.94	3.00	10.86	-36.39	-25.00	-11.39	H
7680.0	-45.15	7.25	3.00	12.98	-39.42	-25.00	-14.42	H
5120.0	-33.30	5.94	3.00	10.86	-28.38	-25.00	-3.38	V
7680.0	-37.46	7.25	3.00	12.98	-31.73	-25.00	-6.73	V

LTE FDD Band 7_Channel Bandwidth 20MHz_16QAM _ Low Channel

Frequency (MHz)	P_{Mea} (dBm)	P_{cl} (dB)	Diatance	G_a Antenna Gain(dB)	Peak EIRP (dBm)	Limit (dBm)	Margin (dB)	Polarization
5020.0	-44.06	5.88	3.00	10.77	-39.17	-25.00	-14.17	H
7530.0	-50.00	7.12	3.00	12.26	-44.86	-25.00	-19.86	H
5020.0	-39.35	5.88	3.00	10.77	-34.46	-25.00	-9.46	V
7530.0	-39.25	7.12	3.00	12.26	-34.11	-25.00	-9.11	V

LTE FDD Band 7_Channel Bandwidth 20MHz_16QAM _ Middle Channel

Frequency (MHz)	P_{Mea} (dBm)	P_{cl} (dB)	Diatance	G_a Antenna Gain(dB)	Peak EIRP (dBm)	Limit (dBm)	Margin (dB)	Polarization
5070.0	-42.25	5.90	3.00	10.81	-37.34	-25.00	-12.34	H
7605.0	-48.47	7.19	3.00	12.32	-43.34	-25.00	-18.34	H
5070.0	-38.02	5.90	3.00	10.81	-33.11	-25.00	-8.11	V
7605.0	-41.25	7.19	3.00	12.32	-36.12	-25.00	-11.12	V

LTE FDD Band 7_Channel Bandwidth 20MHz_16QAM _ High Channel

Frequency (MHz)	P_{Mea} (dBm)	P_{cl} (dB)	Diatance	G_a Antenna Gain(dB)	Peak EIRP (dBm)	Limit (dBm)	Margin (dB)	Polarization
5120.0	-42.99	5.94	3.00	10.86	-38.07	-25.00	-13.07	H
7680.0	-46.60	7.25	3.00	12.98	-40.87	-25.00	-15.87	H
5120.0	-36.37	5.94	3.00	10.86	-31.45	-25.00	-6.45	V
7680.0	-40.59	7.25	3.00	12.98	-34.86	-25.00	-9.86	V

LTE FDD Band 12_Channel Bandwidth 10MHz_QPSK _ Low Channel

Frequency (MHz)	P_{Mea} (dBm)	P_{cl} (dB)	Diatance	G_a Antenna Gain(dB)	Peak EIRP (dBm)	Limit (dBm)	Margin (dB)	Polarization
1408.00	-41.62	3.71	3.00	9.02	-36.31	-13.00	-23.31	H
2112.00	-47.13	4.22	3.00	8.64	-42.71	-13.00	-29.71	H
1408.00	-33.19	3.71	3.00	9.02	-27.88	-13.00	-14.88	V
2112.00	-38.32	4.22	3.00	8.64	-33.90	-13.00	-20.90	V

LTE FDD Band 12_Channel Bandwidth 10MHz_QPSK _ Middle Channel

Frequency (MHz)	P_{Mea} (dBm)	P_{cl} (dB)	Diatance	G_a Antenna Gain(dB)	Peak EIRP (dBm)	Limit (dBm)	Margin (dB)	Polarization
1415.00	-39.22	3.72	3.00	9.04	-33.90	-13.00	-20.90	H
2122.50	-44.90	4.23	3.00	8.60	-40.53	-13.00	-27.53	H
1415.00	-36.80	3.72	3.00	9.04	-31.48	-13.00	-18.48	V
2122.50	-39.91	4.23	3.00	8.60	-35.54	-13.00	-22.54	V

LTE FDD Band 12_Channel Bandwidth 10MHz_QPSK _ High Channel

Frequency (MHz)	P_{Mea} (dBm)	P_{cl} (dB)	Diatance	G_a Antenna Gain(dB)	Peak EIRP (dBm)	Limit (dBm)	Margin (dB)	Polarization
1422.00	-38.44	4.78	3.00	8.91	-34.31	-13.00	-21.31	H
2133.00	-45.40	4.25	3.00	8.26	-41.39	-13.00	-28.39	H
1422.00	-34.31	4.78	3.00	8.91	-30.18	-13.00	-17.18	V
2133.00	-37.26	4.25	3.00	8.26	-33.25	-13.00	-20.25	V

LTE FDD Band 12_Channel Bandwidth 10MHz_16QAM _ Low Channel

Frequency (MHz)	P_{Mea} (dBm)	P_{cl} (dB)	Diatance	G_a Antenna Gain(dB)	Peak EIRP (dBm)	Limit (dBm)	Margin (dB)	Polarization
1408.00	-41.11	3.71	3.00	9.02	-35.80	-13.00	-22.80	H
2112.00	-44.99	4.22	3.00	8.64	-40.57	-13.00	-27.57	H
1408.00	-36.88	3.71	3.00	9.02	-31.57	-13.00	-18.57	V
2112.00	-38.95	4.22	3.00	8.64	-34.53	-13.00	-21.53	V

LTE FDD Band 12_Channel Bandwidth 10MHz_16QAM _ Middle Channel

Frequency (MHz)	P_{Mea} (dBm)	P_{cl} (dB)	Diatance	G_a Antenna Gain(dB)	Peak EIRP (dBm)	Limit (dBm)	Margin (dB)	Polarization
1415.00	-38.30	3.72	3.00	9.04	-32.98	-13.00	-19.98	H
2122.50	-46.82	4.23	3.00	8.60	-42.45	-13.00	-29.45	H
1415.00	-33.66	3.72	3.00	9.04	-28.34	-13.00	-15.34	V
2122.50	-36.71	4.23	3.00	8.60	-32.34	-13.00	-19.34	V

LTE FDD Band 12_Channel Bandwidth 10MHz_16QAM _ High Channel

Frequency (MHz)	P_{Mea} (dBm)	P_{cl} (dB)	Diatance	G_a Antenna Gain(dB)	Peak EIRP (dBm)	Limit (dBm)	Margin (dB)	Polarization
1422.00	-39.28	4.78	3.00	8.91	-35.15	-13.00	-22.15	H
2133.00	-45.33	4.25	3.00	8.26	-41.32	-13.00	-28.32	H
1422.00	-36.05	4.78	3.00	8.91	-31.92	-13.00	-18.92	V
2133.00	-37.56	4.25	3.00	8.26	-33.55	-13.00	-20.55	V

LTE FDD Band 13_Channel Bandwidth 10MHz_QPSK_ Middle Channel

Frequency (MHz)	P_{Mea} (dBm)	P_{cl} (dB)	Diatance	G_a Antenna Gain(dB)	Peak EIRP (dBm)	Limit (dBm)	Margin (dB)	Polarization
1564	-61.56	4.99	3.00	11.12	-55.43	-40.00	-15.43	H
2346	-45.72	5.85	3.00	12.02	-39.55	-13.00	-26.55	H
1564	-60.47	4.99	3.00	11.12	-54.34	-40.00	-14.34	V
2346	-36.14	5.85	3.00	12.02	-29.97	-13.00	-16.97	V

LTE FDD Band 13_Channel Bandwidth 10MHz_16QAM _ Middle Channel

Frequency (MHz)	P_{Mea} (dBm)	P_{cl} (dB)	Diatance	G_a Antenna Gain(dB)	Peak EIRP (dBm)	Limit (dBm)	Margin (dB)	Polarization
1564.0	-58.29	4.99	3.00	11.12	-52.16	-40.00	-12.16	H
2346.0	-45.20	5.85	3.00	12.02	-39.03	-13.00	-26.03	H
1564.0	-60.54	4.99	3.00	11.12	-54.41	-40.00	-14.41	V
2346.0	-38.85	5.85	3.00	12.02	-32.68	-13.00	-19.68	V

LTE FDD Band 17_Channel Bandwidth 10MHz_QPSK_ Low Channel

Frequency (MHz)	P_{Mea} (dBm)	P_{cl} (dB)	Diatance	G_a Antenna Gain(dB)	Peak EIRP (dBm)	Limit (dBm)	Margin (dB)	Polarization
1418.0	-41.60	3.72	3.00	9.04	-36.28	-13.00	-23.28	H
2127.0	-45.02	4.23	3.00	8.60	-40.65	-13.00	-27.65	H
1418.0	-35.97	3.72	3.00	9.04	-30.65	-13.00	-17.65	V
2127.0	-37.11	4.23	3.00	8.60	-32.74	-13.00	-19.74	V

LTE FDD Band 17_Channel Bandwidth 10MHz_QPSK_ Middle Channel

Frequency (MHz)	P_{Mea} (dBm)	P_{cl} (dB)	Diatance	G_a Antenna Gain(dB)	Peak EIRP (dBm)	Limit (dBm)	Margin (dB)	Polarization
1420.0	-39.66	4.78	3.00	8.91	-35.53	-13.00	-22.53	H
2130.0	-45.74	4.25	3.00	8.26	-41.73	-13.00	-28.73	H
1420.0	-35.54	4.78	3.00	8.91	-31.41	-13.00	-18.41	V
2130.0	-38.39	4.25	3.00	8.26	-34.38	-13.00	-21.38	V

LTE FDD Band 17_Channel Bandwidth 10MHz_QPSK_ High Channel

Frequency (MHz)	P_{Mea} (dBm)	P_{cl} (dB)	Diatance	G_a Antenna Gain(dB)	Peak EIRP (dBm)	Limit (dBm)	Margin (dB)	Polarization
1422.0	-38.39	4.78	3.00	8.91	-34.26	-13.00	-21.26	H
2133.0	-45.94	4.25	3.00	8.26	-41.93	-13.00	-28.93	H
1422.0	-34.03	4.78	3.00	8.91	-29.90	-13.00	-16.90	V
2133.0	-37.90	4.25	3.00	8.26	-33.89	-13.00	-20.89	V

LTE FDD Band 17_Channel Bandwidth 10MHz_16QAM _ Low Channel

Frequency (MHz)	P_{Mea} (dBm)	P_{cl} (dB)	Diatance	G_a Antenna Gain(dB)	Peak EIRP (dBm)	Limit (dBm)	Margin (dB)	Polarization
1418.0	-41.38	3.72	3.00	9.04	-36.06	-13.00	-23.06	H
2127.0	-45.96	4.23	3.00	8.60	-41.59	-13.00	-28.59	H
1418.0	-34.30	3.72	3.00	9.04	-28.98	-13.00	-15.98	V
2127.0	-37.39	4.23	3.00	8.60	-33.02	-13.00	-20.02	V

LTE FDD Band 17_Channel Bandwidth 10MHz_16QAM _ Middle Channel

Frequency (MHz)	P_{Mea} (dBm)	P_{cl} (dB)	Diatance	G_a Antenna Gain(dB)	Peak EIRP (dBm)	Limit (dBm)	Margin (dB)	Polarization
1420.0	-40.69	4.78	3.00	8.91	-36.56	-13.00	-23.56	H
2130.0	-45.06	4.25	3.00	8.26	-41.05	-13.00	-28.05	H
1420.0	-33.75	4.78	3.00	8.91	-29.62	-13.00	-16.62	V
2130.0	-37.81	4.25	3.00	8.26	-33.80	-13.00	-20.80	V

LTE FDD Band 17_Channel Bandwidth 10MHz_16QAM _ High Channel

Frequency (MHz)	P_{Mea} (dBm)	P_{cl} (dB)	Diatance	G_a Antenna Gain(dB)	Peak EIRP (dBm)	Limit (dBm)	Margin (dB)	Polarization
1422.0	-39.69	4.78	3.00	8.91	-35.56	-13.00	-22.56	H
2133.0	-47.15	4.25	3.00	8.26	-43.14	-13.00	-30.14	H
1422.0	-35.47	4.78	3.00	8.91	-31.34	-13.00	-18.34	V
2133.0	-39.77	4.25	3.00	8.26	-35.76	-13.00	-22.76	V

LTE TDD Band 41_Channel Bandwidth 20MHz_QPSK_ Low Channel

Frequency (MHz)	P_{Mea} (dBm)	P_{cl} (dB)	Diatance	G_a Antenna Gain(dB)	Peak EIRP (dBm)	Limit (dBm)	Margin (dB)	Polarization
5012.0	-40.13	7.15	3.00	9.88	-37.40	-25.00	-12.40	H
7518.0	-46.42	8.36	3.00	11.36	-43.42	-25.00	-18.42	H
5012.0	-35.87	7.15	3.00	9.88	-33.14	-25.00	-8.14	V
7518.0	-39.85	8.36	3.00	11.36	-36.85	-25.00	-11.85	V

LTE TDD Band 41_Channel Bandwidth 20MHz_QPSK_ Middle Channel

Frequency (MHz)	P_{Mea} (dBm)	P_{cl} (dB)	Diatance	G_a Antenna Gain(dB)	Peak EIRP (dBm)	Limit (dBm)	Margin (dB)	Polarization
5186.0	-41.72	7.26	3.00	10.03	-38.95	-25.00	-13.95	H
7779.0	-45.86	8.48	3.00	11.41	-42.93	-25.00	-17.93	H
5186.0	-33.33	7.26	3.00	10.03	-30.56	-25.00	-5.56	V
7779.0	-40.00	8.48	3.00	11.41	-37.07	-25.00	-12.07	V

LTE TDD Band 41_Channel Bandwidth 20MHz_QPSK_ High Channel

Frequency (MHz)	P_{Mea} (dBm)	P_{cl} (dB)	Diatance	G_a Antenna Gain(dB)	Peak EIRP (dBm)	Limit (dBm)	Margin (dB)	Polarization
5360.0	-39.75	7.17	3.00	9.62	-37.30	-25.00	-12.30	H
8040.0	-44.68	8.39	3.00	11.46	-41.61	-25.00	-16.61	H
5360.0	-36.45	7.17	3.00	9.62	-34.00	-25.00	-9.00	V
8040.0	-39.00	8.39	3.00	11.46	-35.93	-25.00	-10.93	V

LTE TDD Band 41_Channel Bandwidth 20MHz_16QAM_ Low Channel

Frequency (MHz)	P_{Mea} (dBm)	P_{cl} (dB)	Diatance	G_a Antenna Gain(dB)	Peak EIRP (dBm)	Limit (dBm)	Margin (dB)	Polarization
5012.0	-41.84	7.15	3.00	9.88	-39.11	-25.00	-14.11	H
7518.0	-48.48	8.36	3.00	11.36	-45.48	-25.00	-20.48	H
5012.0	-37.29	7.15	3.00	9.88	-34.56	-25.00	-9.56	V
7518.0	-42.66	8.36	3.00	11.36	-39.66	-25.00	-14.66	V

LTE TDD Band 41_Channel Bandwidth 20MHz_16QAM_ Middle Channel

Frequency (MHz)	P_{Mea} (dBm)	P_{cl} (dB)	Diatance	G_a Antenna Gain(dB)	Peak EIRP (dBm)	Limit (dBm)	Margin (dB)	Polarization
5186.0	-43.10	7.26	3.00	10.03	-40.33	-25.00	-15.33	H
7779.0	-48.96	8.48	3.00	11.41	-46.03	-25.00	-21.03	H
5186.0	-36.28	7.26	3.00	10.03	-33.51	-25.00	-8.51	V
7779.0	-40.96	8.48	3.00	11.41	-38.03	-25.00	-13.03	V

LTE TDD Band 41_Channel Bandwidth 20MHz_16QAM_ High Channel

Frequency (MHz)	P_{Mea} (dBm)	P_{cl} (dB)	Diatance	G_a Antenna Gain(dB)	Peak EIRP (dBm)	Limit (dBm)	Margin (dB)	Polarization
5360.0	-43.85	7.17	3.00	9.62	-41.40	-25.00	-16.40	H
8040.0	-48.05	8.39	3.00	11.46	-44.98	-25.00	-19.98	H
5360.0	-36.64	7.17	3.00	9.62	-34.19	-25.00	-9.19	V
8040.0	-40.77	8.39	3.00	11.46	-37.70	-25.00	-12.70	V

LTE FDD Band 66_Channel Bandwidth 20MHz_QPSK _ Low Channel

Frequency (MHz)	P_{Mea} (dBm)	P_{cl} (dB)	Diatance	G_a Antenna Gain(dB)	Peak EIRP (dBm)	Limit (dBm)	Margin (dB)	Polarization
3440.0	-41.03	4.92	3.00	10.45	-35.50	-13.00	-22.50	H
5160.0	-45.28	5.78	3.00	12.32	-38.74	-13.00	-25.74	H
3440.0	-36.72	4.92	3.00	10.45	-31.19	-13.00	-18.19	V
5160.0	-41.66	5.78	3.00	12.32	-35.12	-13.00	-22.12	V

LTE FDD Band 66_Channel Bandwidth 20MHz_QPSK _ Middle Channel

Frequency (MHz)	P_{Mea} (dBm)	P_{cl} (dB)	Diatance	G_a Antenna Gain(dB)	Peak EIRP (dBm)	Limit (dBm)	Margin (dB)	Polarization
3490.0	-41.38	4.99	3.00	11.12	-35.25	-13.00	-22.25	H
5235.0	-46.14	5.85	3.00	12.02	-39.97	-13.00	-26.97	H
3490.0	-34.04	4.99	3.00	11.12	-27.91	-13.00	-14.91	V
5235.0	-40.86	5.85	3.00	12.02	-34.69	-13.00	-21.69	V

LTE FDD Band 66_Channel Bandwidth 20MHz_QPSK _ High Channel

Frequency (MHz)	P_{Mea} (dBm)	P_{cl} (dB)	Diatance	G_a Antenna Gain(dB)	Peak EIRP (dBm)	Limit (dBm)	Margin (dB)	Polarization
3540.0	-40.54	5.12	3.00	9.98	-35.68	-13.00	-22.68	H
5310.0	-47.31	5.93	3.00	11.66	-41.58	-13.00	-28.58	H
3540.0	-36.79	5.12	3.00	9.98	-31.93	-13.00	-18.93	V
5310.0	-38.01	5.93	3.00	11.66	-32.28	-13.00	-19.28	V

LTE FDD Band 66_Channel Bandwidth 20MHz_16QAM _ Low Channel

Frequency (MHz)	P_{Mea} (dBm)	P_{cl} (dB)	Diatance	G_a Antenna Gain(dB)	Peak EIRP (dBm)	Limit (dBm)	Margin (dB)	Polarization
3440.0	-46.69	4.92	3.00	10.45	-41.16	-13.00	-28.16	H
5160.0	-50.41	5.78	3.00	12.32	-43.87	-13.00	-30.87	H
3440.0	-38.75	4.92	3.00	10.45	-33.22	-13.00	-20.22	V
5160.0	-42.31	5.78	3.00	12.32	-35.77	-13.00	-22.77	V

LTE FDD Band 66_Channel Bandwidth 20MHz_16QAM _ Middle Channel

Frequency (MHz)	P_{Mea} (dBm)	P_{cl} (dB)	Diatance	G_a Antenna Gain(dB)	Peak EIRP (dBm)	Limit (dBm)	Margin (dB)	Polarization
3490.0	-46.05	4.99	3.00	11.12	-39.92	-13.00	-26.92	H
5235.0	-49.19	5.85	3.00	12.02	-43.02	-13.00	-30.02	H
3490.0	-38.32	4.99	3.00	11.12	-32.19	-13.00	-19.19	V
5235.0	-44.64	5.85	3.00	12.02	-38.47	-13.00	-25.47	V

LTE FDD Band 66_Channel Bandwidth 20MHz_16QAM _ High Channel

Frequency (MHz)	P_{Mea} (dBm)	P_{cl} (dB)	Diatance	G_a Antenna Gain(dB)	Peak EIRP (dBm)	Limit (dBm)	Margin (dB)	Polarization
3540.0	-45.97	5.12	3.00	9.98	-41.11	-13.00	-28.11	H
5310.0	-49.15	5.93	3.00	11.66	-43.42	-13.00	-30.42	H
3540.0	-37.57	5.12	3.00	9.98	-32.71	-13.00	-19.71	V
5310.0	-42.00	5.93	3.00	11.66	-36.27	-13.00	-23.27	V

Notes：All channel bandwidth were tested,the report recorded the worst data.

4.7 Frequency Stability under Temperature & Voltage Variations

LIMIT

According to FCC §2.1055,§22.355, §24.235, §27.54 and§90.213 requirement, the frequency stability shall be sufficient to ensure that the fundamental emissions stay within the authorized bands of operation and should not exceed 2.5ppm.

TEST CONFIGURATION

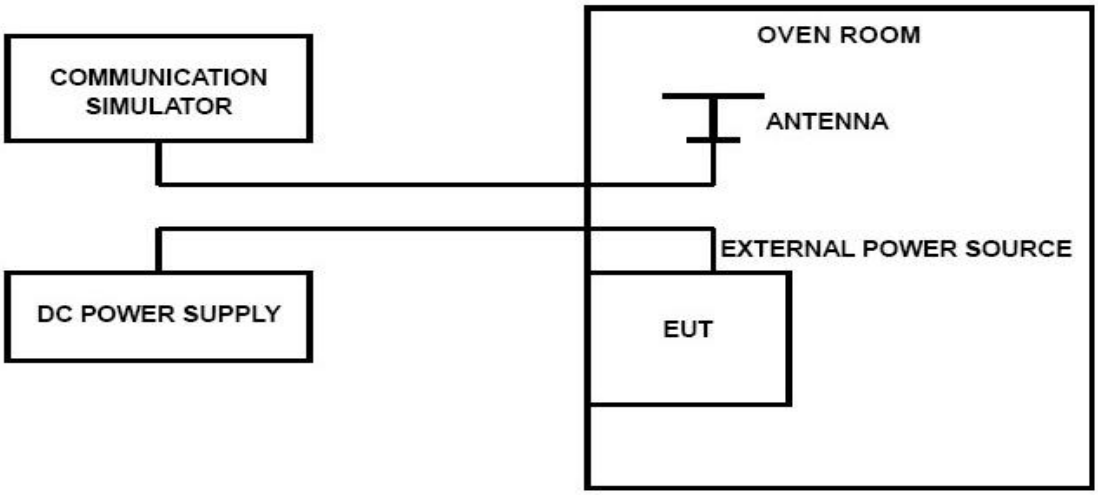

TEST PROCEDURE

The EUT was setup according to TIA-603-E

Frequency Stability Under Temperature Variations:
In order to measure the carrier frequency under the condition of AFC lock, it is necessary to make measurements with the EUT in a “call mode”. This is accomplished with the use of R&S CMW 500 DIGITAL RADIO COMMUNICATION TESTER.
1. Measure the carrier frequency at room temperature.
2. Subject the EUT to overnight soak at -30℃.
3. With the EUT, powered via nominal voltage, connected to the CMW 500 and in a simulated call on middle channel for LTE band 2, LTE band 4, LTE band 5, LTE band 7, LTE band 12, LTE band 13, LTE band 17, LTE Band 66; measure the carrier frequency. These measurements should be made within 2 minutes of Powering up the EUT, to prevent significant self-warming.
4. Repeat the above measurements at 10℃ increments from -30℃ to +50℃. Allow at least 1.5 hours at each temperature, unpowered, before making measurements.
5. Re-measure carrier frequency at room temperature with nominal voltage. Vary supply voltage from minimum voltage to maximum voltage, in 0.1Volt increments re-measuring carrier frequency at each voltage. Pause at nominal voltage for 1.5 hours unpowered, to allow any self-heating to stabilize, before continuing.
6. Subject the EUT to overnight soak at +50℃.
7. With the EUT, powered via nominal voltage, connected to the CMW 500 and in a simulated call on the centre channel, measure the carrier frequency. These measurements should be made within 2 minutes of Powering up the EUT, to prevent significant self-warming.
8. Repeat the above measurements at 10 ℃ increments from +50℃ to -30℃. Allow at least 1.5 hours at each temperature, unpowered, before making measurements
9. At all temperature levels hold the temperature to +/- 0.5℃ during the measurement procedure.
Frequency Stability Under Voltage Variations:
Set chamber temperature to 20℃. Use a variable AC power supply / DC power source to power the EUT and set the voltage to rated voltage. Set the spectrum analyzer RBW low enough to obtain the desired frequency resolution and recorded the frequency.

Reduce the input voltage to specify extreme voltage variation (±15%) and endpoint, record the maximum frequency change.

TEST RESULTS

Remark:
We were tested all RB Configuration refer 3GPP TS136 521 for each Channel Bandwidth of LTE FDD Band 2, LTE FDD Band 4, LTE FDD Band 5, LTE FDD Band 7, LTE FDD Band 12, LTE FDD Band 13, LTE FDD Band 17, LTE FDD Band 41, LTE FDD Band 66; recorded worst case for each Channel Bandwidth of LTE FDD Band 2, LTE FDD Band 4, LTE FDD Band 5, LTE FDD Band 7, LTE FDD Band 12, LTE FDD Band 13, LTE FDD Band 17, LTE FDD Band 41, LTE FDD Band 66.

LTE Band 2, QPSK, 1.4MHz bandwidth (worst case of all bandwidths)

LTE FDD Band 2					
DC Power	Temperature (℃)	Frequency error(Hz)	Frequency error(ppm)	Limit (ppm)	Verdict
VL	20	-62	-0.033	±2.50	PASS
VN	20	-39	-0.021	±2.50	PASS
VH	20	27	0.014	±2.50	PASS
VN	-30	-40	-0.021	±2.50	PASS
VN	-20	-4	-0.002	±2.50	PASS
VN	-10	57	0.030	±2.50	PASS
VN	0	-20	-0.011	±2.50	PASS
VN	10	-68	-0.036	±2.50	PASS
VN	20	5	0.003	±2.50	PASS
VN	30	-49	-0.026	±2.50	PASS
VN	40	-15	-0.008	±2.50	PASS
VN	50	1	0.001	±2.50	PASS

LTE Band 2, 16QAM, 1.4MHz bandwidth (worst case of all bandwidths)

LTE FDD Band 2					
DC Power	Temperature (℃)	Frequency error(Hz)	Frequency error(ppm)	Limit (ppm)	Verdict
VL	20	67	0.036	±2.50	PASS
VN	20	-32	-0.017	±2.50	PASS
VH	20	4	0.002	±2.50	PASS
VN	-30	69	0.037	±2.50	PASS
VN	-20	25	0.014	±2.50	PASS
VN	-10	-9	-0.005	±2.50	PASS
VN	0	-49	-0.026	±2.50	PASS
VN	10	-50	-0.027	±2.50	PASS
VN	20	45	0.024	±2.50	PASS
VN	30	30	0.016	±2.50	PASS
VN	40	9	0.005	±2.50	PASS
VN	50	10	0.005	±2.50	PASS

LTE Band 4, QPSK, 1.4MHz bandwidth (worst case of all bandwidths)

LTE FDD Band 4					
DC Power	Temperature (℃)	Frequency error(Hz)	Frequency error(ppm)	Limit (ppm)	Verdict
VL	20	-23	-0.014	±2.50	PASS
VN	20	-62	-0.036	±2.50	PASS
VH	20	35	0.020	±2.50	PASS
VN	-30	21	0.012	±2.50	PASS
VN	-20	41	0.023	±2.50	PASS
VN	-10	-29	-0.017	±2.50	PASS
VN	0	55	0.032	±2.50	PASS
VN	10	-65	-0.038	±2.50	PASS
VN	20	53	0.030	±2.50	PASS
VN	30	18	0.010	±2.50	PASS
VN	40	-60	-0.035	±2.50	PASS
VN	50	-56	-0.032	±2.50	PASS

LTE Band 4, 16QAM, 1.4MHz bandwidth (worst case of all bandwidths)

LTE FDD Band 4					
DC Power	Temperature (℃)	Frequency error(Hz)	Frequency error(ppm)	Limit (ppm)	Verdict
VL	20	0	0.000	±2.50	PASS
VN	20	-1	-0.001	±2.50	PASS
VH	20	67	0.039	±2.50	PASS
VN	-30	-12	-0.007	±2.50	PASS
VN	-20	-60	-0.035	±2.50	PASS
VN	-10	30	0.017	±2.50	PASS
VN	0	-31	-0.018	±2.50	PASS
VN	10	-20	-0.012	±2.50	PASS
VN	20	-1	0.000	±2.50	PASS
VN	30	29	0.017	±2.50	PASS
VN	40	32	0.018	±2.50	PASS
VN	50	53	0.031	±2.50	PASS

LTE Band 5, QPSK, 1.4MHz bandwidth(worst case of all bandwidths)

LTE FDD Band 5					
DC Power	Temperature (℃)	Frequency error(Hz)	Frequency error(ppm)	Limit (ppm)	Verdict
VL	20	-7	-0.009	±2.50	PASS
VN	20	-49	-0.059	±2.50	PASS
VH	20	-1	-0.002	±2.50	PASS
VN	-30	19	0.022	±2.50	PASS
VN	-20	-43	-0.051	±2.50	PASS
VN	-10	8	0.010	±2.50	PASS
VN	0	-32	-0.039	±2.50	PASS
VN	10	0	0.000	±2.50	PASS
VN	20	-20	-0.024	±2.50	PASS
VN	30	-6	-0.007	±2.50	PASS
VN	40	1	0.001	±2.50	PASS
VN	50	65	0.078	±2.50	PASS

LTE Band 5, 16QAM, 1.4MHz bandwidth(worst case of all bandwidths)

LTE FDD Band 5					
DC Power	Temperature (℃)	Frequency error(Hz)	Frequency error(ppm)	Limit (ppm)	Verdict
VL	20	24	0.029	±2.50	PASS
VN	20	7	0.009	±2.50	PASS
VH	20	-35	-0.042	±2.50	PASS
VN	-30	68	0.081	±2.50	PASS
VN	-20	64	0.077	±2.50	PASS
VN	-10	26	0.031	±2.50	PASS
VN	0	-6	-0.007	±2.50	PASS
VN	10	-24	-0.029	±2.50	PASS
VN	20	-8	-0.010	±2.50	PASS
VN	30	-44	-0.053	±2.50	PASS
VN	40	-25	-0.030	±2.50	PASS
VN	50	14	0.016	±2.50	PASS

LTE Band 7, QPSK, 5MHz bandwidth (worst case of all bandwidths and modulation type)

LTE FDD Band 7					
DC Power	Temperature (℃)	Frequency error(Hz)	Frequency error(ppm)	Limit (ppm)	Verdict
VL	20	-41	-0.057	±2.50	PASS
VN	20	-68	-0.096	±2.50	PASS
VH	20	-50	-0.071	±2.50	PASS
VN	-30	-64	-0.091	±2.50	PASS
VN	-20	50	0.071	±2.50	PASS
VN	-10	43	0.061	±2.50	PASS
VN	0	32	0.045	±2.50	PASS
VN	10	-44	-0.062	±2.50	PASS
VN	20	7	0.010	±2.50	PASS
VN	30	49	0.068	±2.50	PASS
VN	40	42	0.059	±2.50	PASS
VN	50	25	0.035	±2.50	PASS

LTE Band 7, 16QAM, 5MHz bandwidth (worst case of all bandwidths and modulation type)

LTE FDD Band 7					
DC Power	Temperature (℃)	Frequency error(Hz)	Frequency error(ppm)	Limit (ppm)	Verdict
VL	20	-36	-0.050	±2.50	PASS
VN	20	67	0.094	±2.50	PASS
VH	20	-19	-0.026	±2.50	PASS
VN	-30	52	0.073	±2.50	PASS
VN	-20	27	0.038	±2.50	PASS
VN	-10	48	0.068	±2.50	PASS
VN	0	-11	-0.016	±2.50	PASS
VN	10	-25	-0.035	±2.50	PASS
VN	20	64	0.090	±2.50	PASS
VN	30	52	0.074	±2.50	PASS
VN	40	-40	-0.056	±2.50	PASS
VN	50	-43	-0.060	±2.50	PASS

LTE Band 12, QPSK, 1.4MHz bandwidth (worst case of all bandwidths and modulation type)

LTE FDD Band 12					
DC Power	Temperature (℃)	Frequency error(Hz)	Frequency error(ppm)	Limit (ppm)	Verdict
VL	20	18	0.025	±2.50	PASS
VN	20	36	0.051	±2.50	PASS
VH	20	48	0.068	±2.50	PASS
VN	-30	50	0.071	±2.50	PASS
VN	-20	46	0.065	±2.50	PASS
VN	-10	-11	-0.015	±2.50	PASS
VN	0	-32	-0.046	±2.50	PASS
VN	10	-3	-0.004	±2.50	PASS
VN	20	52	0.073	±2.50	PASS
VN	30	-37	-0.052	±2.50	PASS
VN	40	36	0.051	±2.50	PASS
VN	50	46	0.065	±2.50	PASS

LTE Band 12, 16QAM, 1.4MHz bandwidth (worst case of all bandwidths and modulation type)

LTE FDD Band 12					
DC Power	Temperature (℃)	Frequency error(Hz)	Frequency error(ppm)	Limit (ppm)	Verdict
VL	20	54	0.077	±2.50	PASS
VN	20	-69	-0.098	±2.50	PASS
VH	20	62	0.088	±2.50	PASS
VN	-30	-17	-0.023	±2.50	PASS
VN	-20	-25	-0.036	±2.50	PASS
VN	-10	40	0.057	±2.50	PASS
VN	0	13	0.018	±2.50	PASS
VN	10	-12	-0.017	±2.50	PASS
VN	20	23	0.033	±2.50	PASS
VN	30	15	0.021	±2.50	PASS
VN	40	20	0.029	±2.50	PASS
VN	50	61	0.086	±2.50	PASS

LTE Band 13, 5MHz bandwidth, QPSK (worst case of all bandwidths)

LTE FDD Band 13					
DC Power	*Temperature (℃)*	*Frequency error(Hz)*	*Frequency error(ppm)*	*Limit (ppm)*	*Verdict*
VL	20	51	0.066	2.50	PASS
VN	20	-35	-0.045	2.50	PASS
VH	20	-42	-0.053	2.50	PASS
VN	-30	46	0.059	2.50	PASS
VN	-20	6	0.008	2.50	PASS
VN	-10	-5	-0.006	2.50	PASS
VN	0	13	0.016	2.50	PASS
VN	10	46	0.058	2.50	PASS
VN	20	10	0.013	2.50	PASS
VN	30	-6	-0.008	2.50	PASS
VN	40	-29	-0.037	2.50	PASS
VN	50	39	0.049	2.50	PASS

LTE Band 13, 5MHz bandwidth, 16QAM (worst case of all bandwidths)

LTE FDD Band 13					
DC Power	*Temperature (℃)*	*Frequency error(Hz)*	*Frequency error(ppm)*	*Limit (ppm)*	*Verdict*
VL	20	38	0.049	2.50	PASS
VN	20	64	0.081	2.50	PASS
VH	20	41	0.052	2.50	PASS
VN	-30	-8	-0.010	2.50	PASS
VN	-20	70	0.089	2.50	PASS
VN	-10	-68	-0.087	2.50	PASS
VN	0	-59	-0.075	2.50	PASS
VN	10	10	0.013	2.50	PASS
VN	20	-48	-0.061	2.50	PASS
VN	30	-44	-0.056	2.50	PASS
VN	40	15	0.019	2.50	PASS
VN	50	17	0.022	2.50	PASS

LTE Band 17, QPSK, 5MHz bandwidth (worst case of all bandwidths and modulation type)

LTE FDD Band 17					
DC Power	Temperature (℃)	Frequency error(Hz)	Frequency error(ppm)	Limit (ppm)	Verdict
VL	20	63	0.089	±2.50	PASS
VN	20	-24	-0.034	±2.50	PASS
VH	20	24	0.034	±2.50	PASS
VN	-30	9	0.013	±2.50	PASS
VN	-20	62	0.087	±2.50	PASS
VN	-10	-33	-0.046	±2.50	PASS
VN	0	59	0.083	±2.50	PASS
VN	10	21	0.030	±2.50	PASS
VN	20	-13	-0.019	±2.50	PASS
VN	30	-31	-0.044	±2.50	PASS
VN	40	-67	-0.094	±2.50	PASS
VN	50	-9	-0.012	±2.50	PASS

LTE Band 17, 16QAM, 5MHz bandwidth (worst case of all bandwidths and modulation type)

LTE FDD Band 17					
DC Power	Temperature (℃)	Frequency error(Hz)	Frequency error(ppm)	Limit (ppm)	Verdict
VL	20	-63	-0.089	±2.50	PASS
VN	20	-54	-0.076	±2.50	PASS
VH	20	33	0.046	±2.50	PASS
VN	-30	-25	-0.035	±2.50	PASS
VN	-20	69	0.097	±2.50	PASS
VN	-10	5	0.007	±2.50	PASS
VN	0	-68	-0.096	±2.50	PASS
VN	10	-27	-0.038	±2.50	PASS
VN	20	0	0.000	±2.50	PASS
VN	30	-27	-0.037	±2.50	PASS
VN	40	25	0.036	±2.50	PASS
VN	50	-28	-0.039	±2.50	PASS

LTE Band 41, 5MHz bandwidth, QPSK (worst case of all bandwidths)

LTE TDD Band 41					
DC Power	**Temperature (℃)**	**Frequency error(Hz)**	**Frequency error(ppm)**	**Limit (ppm)**	**Verdict**
VL	20	10	0.004	2.50	PASS
VN	20	1	0.001	2.50	PASS
VH	20	58	0.022	2.50	PASS
VN	-30	-66	-0.025	2.50	PASS
VN	-20	60	0.023	2.50	PASS
VN	-10	4	0.002	2.50	PASS
VN	0	-36	-0.014	2.50	PASS
VN	10	55	0.021	2.50	PASS
VN	20	30	0.012	2.50	PASS
VN	30	52	0.020	2.50	PASS
VN	40	48	0.019	2.50	PASS
VN	50	-28	-0.011	2.50	PASS

LTE Band 41, 5MHz bandwidth, 16QAM (worst case of all bandwidths)

LTE TDD Band 41					
DC Power	**Temperature (℃)**	**Frequency error(Hz)**	**Frequency error(ppm)**	**Limit (ppm)**	**Verdict**
VL	20	-22	-0.008	2.50	PASS
VN	20	5	0.002	2.50	PASS
VH	20	-58	-0.022	2.50	PASS
VN	-30	40	0.016	2.50	PASS
VN	-20	27	0.010	2.50	PASS
VN	-10	-47	-0.018	2.50	PASS
VN	0	-59	-0.023	2.50	PASS
VN	10	55	0.021	2.50	PASS
VN	20	-50	-0.019	2.50	PASS
VN	30	11	0.004	2.50	PASS
VN	40	26	0.010	2.50	PASS
VN	50	-14	-0.005	2.50	PASS

LTE Band 66, 1.4MHz bandwidth, QPSK (worst case of all bandwidths)

LTE FDD Band 66					
DC Power	Temperature (℃)	Frequency error(Hz)	Frequency error(ppm)	Limit (ppm)	Verdict
VL	20	-4	-0.0024	2.50	PASS
VN	20	28	0.0160	2.50	PASS
VH	20	-7	-0.0041	2.50	PASS
VN	-30	5	0.0026	2.50	PASS
VN	-20	-8	-0.0049	2.50	PASS
VN	-10	-3	-0.0019	2.50	PASS
VN	0	32	0.0182	2.50	PASS
VN	10	23	0.0130	2.50	PASS
VN	20	-14	-0.0077	2.50	PASS
VN	30	3	0.0019	2.50	PASS
VN	40	26	0.0150	2.50	PASS
VN	50	-8	-0.0044	2.50	PASS

LTE Band 66, 1.4MHz bandwidth, 16QAM (worst case of all bandwidths)

LTE FDD Band 66					
DC Power	Temperature (℃)	Frequency error(Hz)	Frequency error(ppm)	Limit (ppm)	Verdict
VL	20	13	0.0075	2.50	PASS
VN	20	-11	-0.0060	2.50	PASS
VH	20	23	0.0129	2.50	PASS
VN	-30	26	0.0148	2.50	PASS
VN	-20	9	0.0053	2.50	PASS
VN	-10	32	0.0181	2.50	PASS
VN	0	-4	-0.0022	2.50	PASS
VN	10	27	0.0154	2.50	PASS
VN	20	24	0.0139	2.50	PASS
VN	30	2	0.0009	2.50	PASS
VN	40	9	0.0054	2.50	PASS
VN	50	-13	-0.0077	2.50	PASS

5 Test Setup Photos of the EUT

Pleaserefer to separated files for Test Setup Photos of the EUT.

6 External Photos of the EUT

Pleaserefer to separated files for External Photos of the EUT.

7 Internal Photos of the EUT

Pleaserefer to separated files for Internal Photos of the EUT.

----------THE END OF REPORT----------