RF Test Report

Report No: FCS202404261W02

Issued for

Applicant:	KOKOZI Co. Ltd
Address:	8th, 26, Samseong-ro 85-gil, Gangnam-gu, Seoul, Republic of Korea
Product Name:	kokozi house
Brand Name:	kokozi
Model Name:	KH-24A100KR
Series Model:	AT-22B012KR , AT-22B022KR , AT-23B009KR , AT-23B034KR , AT-23B031KR , AT-22B023KR , AT-23B035KR , AT-23B043KR , AT-22B021KR , AT-23B038KR , AT-22B005KR , AT-22B024KR , AT-22B002KR , AT-23B045KR , AT-23B036KR , AT-24B046KR , AT-22B018KR , AT-22B016KR , AT-23B037KR , AT-22B017KR , AT-22B019KR , AT-22B014KR , AT-22B003KR , AT-23B027KR , AT-22B006KR , AT-23B039KR , AT-23B040KR , AT-22B020KR , AT-22B004KR , AT-23B026KR , AT-23B041KR , AT-23B026KR , AT-23B033KR , AT-23B044KR , AT-22B025KR , AT-24B047KR
FCC ID:	2BG4NKH-24A100KR

Issued By: Flux Compliance Service Laboratory
Add: Room 105 Floor Bao hao Technology Building 1 NO.15 Gong ye West Road Hi-Tech Industrial, Song shan lake Dongguan
Tel: 769-27280901 Fax:769-27280901 http://www.FCS-lab.com

TEST RESULT CERTIFICATION

Applicant's Name..... :	KOKOZI Co. Ltd
Address..... :	8th, 26, Samseong-ro 85-gil, Gangnam-gu, Seoul, Republic of Korea
Manufacture's Name..... :	KOKOZI Co. Ltd
Address..... :	8th, 26, Samseong-ro 85-gil, Gangnam-gu, Seoul, Republic of Korea

Product Description

Product Name..... :	kokozi house
Brand Name.....:	kokozi
Model Name..... :	KH-24A100KR
Series Model.....:	Refer to page 1 of the report
Test Standards.....:	FCC Rules and Regulations Part 15 Subpart C, Section 225
Test Procedure.....:	ANSI C63.10:2013

This device described above has been tested FCS, the test results show that the equipment under test (EUT) is in compliance with the FCC requirements. And it is applicable only to the tested sample identified in the report.
This report shall not be reproduced except in full, without the written approval of FCS, this document may be altered or revised by FCS, personal only, and shall be noted in the revision of the document..

Date of Test.....:

Date (s) of performance of tests. :	Apr. 19, 2024 ~ May. 10, 2024
Date of Issue.....:	May. 11, 2024
Test Result..... :	Pass

Tested by : Scott Shen

(Scott Shen)

Reviewed by : Duke Qian

(Duke Qian)

Approved by : Jack Wang

(Jack Wang)

Table of Contents **Page**

1. SUMMARY OF TEST RESULTS 6
1.1 TEST FACTORY 7
1.2 MEASUREMENT UNCERTAINTY 7
2. GENERAL INFORMATION 8
2.1 GENERAL DESCRIPTION OF THE EUT 8
2.2 DESCRIPTION OF THE TEST MODES 9
2.3 DESCRIPTION OF NECESSARY ACCESSORIES AND SUPPORT UNITS 10
2.4 EQUIPMENTS LIST 11
3 CONDUCTED EMISSION MEASUREMENT 12
3.1 LIMIT 12
FCC §15.207 12
3.2 TEST PROCEDURE 12
3.3 TEST SETUP 13
3.4 TEST RESULTS 14
4. RADIATED EMISSION MEASUREMENT 16
4.1 LIMIT 16
FCC §15.225(A), (B), (C), (D) 16
4.2 TEST PROCEDURE 17
4.3 TEST SETUP 18
4.4 TEST RESULTS 19
For field strength of the fundamental signal 19
(30MHZ-1000MHZ) 21
5. 20 DB BANDWIDTH TEST 23
5.1 TEST PROCEDURE 23
FCC §2.1049&15.215(C) 23
5.2 TEST SETUP 23
5.3 TEST RESULTS 24
6 FREQUENCY STABILITY MEASUREMEN 25
6.1 LIMIT 25
be performed using a new battery 25
6.2 TEST PROCEDURE 25
6.3TEST RESULTS 26
7 ANTENNA REQUIREMENT 27

7.1 STANDARD REQUIREMENT 27
7.2 EUT ANTENNA 27

Revision History

Rev.	Issue Date	Effect Page	Contents
00	May. 11, 2024	N/A	Initial Issue

1. SUMMARY OF TEST RESULTS

Test Summary			
FCC part No.	Test Item	Judgment	Remark
15.207	Conducted Emission	PASS	--
15.225(d) &15.209	Radiated Emission	PASS	--
15.225(a)	Field Strength of Fundamental Emissions	PASS	--
15.215	20dB Bandwidth	PASS	--
15.225(e)	Frequency Stability	PASS	--
15.203	Antenna Requirement	PASS	--

NOTE:

(1)" N/A" denotes test is not applicable in this Test Report

(2) All tests are according to ANSI C63.10-2013

1.1 TEST FACTORY

Company Name:	Flux Compliance Service Laboratory
Address:	Room 105 Floor Bao hao Technology Building 1 NO.15 Gong ye West Road Hi-Tech Industrial, Song shan lake Dongguan
Telephone:	+86-769-27280901
Fax:	+86-769-27280901
FCC Test Firm Registration Number: 514908 Designation number: CN0127 A2LA accreditation number：5545.01 ISED Number：25801 CAB ID ： CN0097	

1.2 MEASUREMENT UNCERTAINTY

The reported uncertainty of measurement **y ±U**, where expended uncertainty **U** is based on a standard uncertainty multiplied by a coverage factor of **k=2**, providing a level of confidence of approximately **95** %.

No.	Item	Uncertainty
1	RF output power, conducted	±0.71dB
2	Unwanted Emissions, conducted	±2.98 dB
3	Conducted Emission (9KHz-150KHz)	±4.13 dB
4	Conducted Emission (150KHz-30MHz)	±4.74 dB
5	All emissions,radiated (9KHz -30MHz)	±3.1 dB
6	All emissions,radiated(<1G) 30MHz-1000MHz	±3.2 dB
6	All emissions,radiated (1GHz -18GHz)	±3.66 dB
7	All emissions,radiated (18GHz -40GHz)	±4.31 dB
9	Occupied bandwidth	±0.3 dB

2. GENERAL INFORMATION

2.1 GENERAL DESCRIPTION OF THE EUT

Product Name	kokozi house
Trade Name	kokozi
Model Name	KH-24A100KR
Series Model	Refer to page 1 of the report
Model Difference	We (KOKOZI Co. Ltd) hereby state that all the models are electrical identical including the same software parameter and hardware design (i.e., circuit design, PCB Layout, RF module/circuit, antenna type(s) and antenna location, components on PCB, etc.,), same mechanical structure and design (including product enclosure, materials, etc.,), the only difference is the model name and appearance color.
Frequency	13.56MHZ
Modulation	ASK
Antenna type	Coil antenna
Power Supply	DC 5V
Hardware version number	V1.0
Software version number	V1.0
Connecting I/O Port(s)	Please refer to the User's Manual

Note:

1. For a more detailed features description, please refer to the manufacturer's specifications or the User's Manual.
2. Table for Filed Antenna

Ant.	Brand	Model Name	Antenna Type	Connector	Gain (dBi)	NOTE
1	N/A	N/A	Internal antenna	N/A	0dBi	Antenna

2.2 DESCRIPTION OF THE TEST MODES

To investigate the maximum EMI emission characteristics generates from EUT, the test system was pre-scanning tested base on the consideration of following EUT operation mode or test configuration mode which possible have effect on EMI emission level. Each of these EUT operation mode(s) or test configuration mode(s) mentioned above was evaluated respectively.

Configuration and peripherals

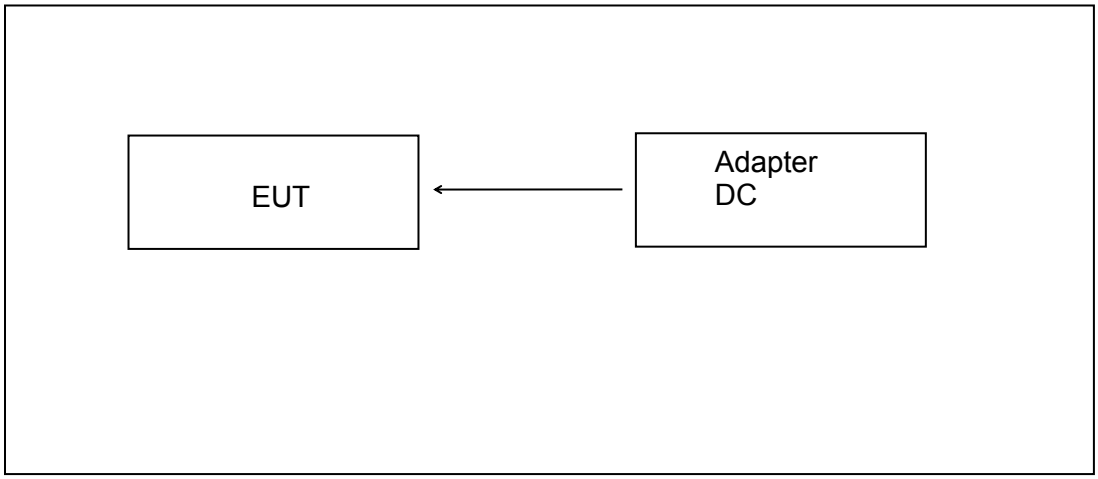

Test environment conditions
During the measurement the environmental conditions were within the listed ranges:
Temperature range: 21-25℃
Humidity range: 40-75%
Pressure range: 86-106kPa

2.3 DESCRIPTION OF NECESSARY ACCESSORIES AND SUPPORT UNITS

The EUT has been tested as an independent unit together with other necessary accessories or support units. The following support units or accessories were used to form a representative test configuration during the tests.

Necessary accessories

Item	Equipment	Mfr/Brand	Model/Type No.	Serial No.	Note

Support units

Item	Equipment	Mfr/Brand	Model/Type No.	Serial No.	Note
1	Adapter	Xiaomi	AD652G	N/A	Test use

Note:

(1) The support equipment was authorized by Declaration of Confirmation.
(2) For detachable type I/O cable should be specified the length in cm in『Length』column.
(3) “YES” is means “shielded” “with core”; “NO” is means “unshielded” “without core”.

2.4 EQUIPMENTS LIST

Radiation Test equipment

Kind of Equipment	Manufacturer	Type No.	Company No.	Last calibration	Calibrated until
EMI Test Receiver	R&S	ESRP 3	FCS-E001	2023. 08.29	2024. 08.28
Signal Analyzer	R&S	FSV40-N	FCS-E012	2023. 08.29	2024. 08.28
Active loop Antenna	ZHINAN	ZN30900C	FCS-E013	2023. 08.29	2024. 08.28
Bilog Antenna	SCHWARZBECK	VULB 9168	FCS-E002	2023. 08.29	2024. 08.28
Horn Antenna	SCHWARZBECK	BBHA 9120D	FCS-E003	2023. 08.29	2024. 08.28
SHF-EHF Horn Antenna (18G-40GHz)	A-INFO	LB-180400-KF	FCS-E018	2023. 08.29	2024. 08.28
Pre-Amplifier(0.1M-3G Hz)	EMCI	EM330N	FCS-E004	2023. 08.29	2024. 08.28
Pre-Amplifier (1G-18GHz)	N/A	TSAMP-0518SE	FCS-E014	2023. 08.29	2024. 08.28
Pre-Amplifier (18G-40GHz)	TERA-MW	TRLA-0400	FCS-E019	2023. 08.29	2024. 08.28
Temperature & Humidity	HTC-1	victor	FCS-E005	2023. 08.29	2024. 08.28

Conduction Test equipment

Kind of Equipment	Manufacturer	Type No.	Company No.	Last calibration	Calibrated until
EMI Test Receiver	R&S	ESCI	FCS-E020	2023. 08.29	2024. 08.28
LISN	R&S	ENV216	FCS-E007	2023. 08.29	2024. 08.28
LISN	ETS	3810/2NM	FCS-E009	2023. 08.29	2024. 08.28
Temperature & Humidity	HTC-1	victor	FCS-E008	2023. 08.29	2024. 08.28

RF Connected Test

Kind of Equipment	Manufacturer	Type No.	Company No.	Last calibration	Calibrated until
MXA SIGNAL Analyzer	Keysight	N9020A	FCS-E015	2023. 08.29	2024. 08.28
Spectrum Analyzer	Agilent	E4447A	MY50180039	2023. 08.29	2024. 08.28
Spectrum Analyzer	R&S	FSV-40	101499	2023. 08.29	2024. 08.28

3 CONDUCTED EMISSION MEASUREMENT

3.1 LIMIT

FCC §15.207

Operating frequency band. In case the emission fall within the restricted band specified on Part 207(a) limit in the table below has to be followed.

FREQUENCY (MHz)	Conducted Emissionlimit (dBuV)	
	Quasi-peak	Average
0.15 -0.5	66 - 56 *	56 - 46 *
0.50 -5.0	56.00	46.00
5.0 -30.0	60.00	50.00

Note:

(1) The tighter limit applies at the band edges.

(2) The limit of " * " marked band means the limitation decreases linearly with the logarithm of the frequency in the range.

3.2 TEST PROCEDURE

The following table is the setting of the receiver

Receiver Parameters	Setting
Attenuation	10 dB
Start Frequency	0.15 MHz
Stop Frequency	30 MHz
IF Bandwidth	9 kHz

a. The EUT was 0.8 meters from the horizontal ground plane and 0.4 meters from the vertical ground plane with EUT being connected to the power mains through a line impedance stabilization network (LISN). All other support equipments powered from additional LISN(s). The LISN provide 50 Ohm/ 50uH of coupling impedance for the measuring instrument.

b. Interconnecting cables that hang closer than 40 cm to the ground plane shall be folded back and forth in the center forming a bundle 30 to 40 cm long.

c. I/O cables that are not connected to a peripheral shall be bundled in the center. The end of the cable may be terminated, if required, using the correct terminating impedance. The overall length shall not exceed 1 m.

d. LISN at least 80 cm from nearest part of EUT chassis.

e. For the actual test configuration, please refer to the related Item –EUT Test Photos.

3.3 TEST SETUP

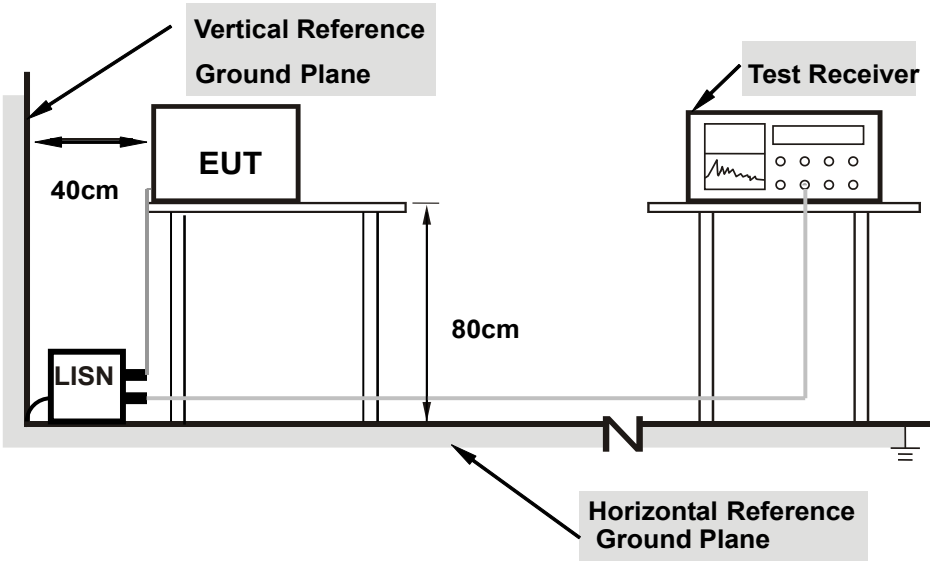

Note: 1.Support units were connected to second LISN.

2.Both of LISNs (AMN) are 80 cm from EUT and at least 80 from other units and other metal planes

3.4 TEST RESULTS

Temperature:	23.5℃	Relative Humidity:	59%
Phase:	L	Test Mode:	ASK
Test Voltage:	DC 5V		

No.	Frequency (MHz)	Reading (dBuV)	Correct Factor(dB/m)	Result (dBuV/m)	Limit (dBuV/m)	Margin (dB)	Remark
1	0.1770	48.79	10.11	58.90	64.63	5.73	QP
2	0.1770	15.28	10.11	25.39	54.63	29.24	AVG
3	0.3840	44.08	10.02	54.10	58.19	4.09	QP
4	0.3840	14.38	10.02	24.40	48.19	23.79	AVG
5	0.8295	27.66	9.99	37.65	56.00	18.35	QP
6	0.8295	0.32	9.99	10.31	46.00	35.69	AVG
7	1.7565	22.81	9.98	32.79	56.00	23.21	QP
8	1.7565	1.57	9.98	11.55	46.00	34.45	AVG
9	5.4240	20.77	9.87	30.64	60.00	29.36	QP
10	5.4240	-0.26	9.87	9.61	50.00	40.39	AVG
11	21.3360	22.57	9.94	32.51	60.00	27.49	QP
12	21.3360	2.77	9.94	12.71	50.00	37.29	AVG

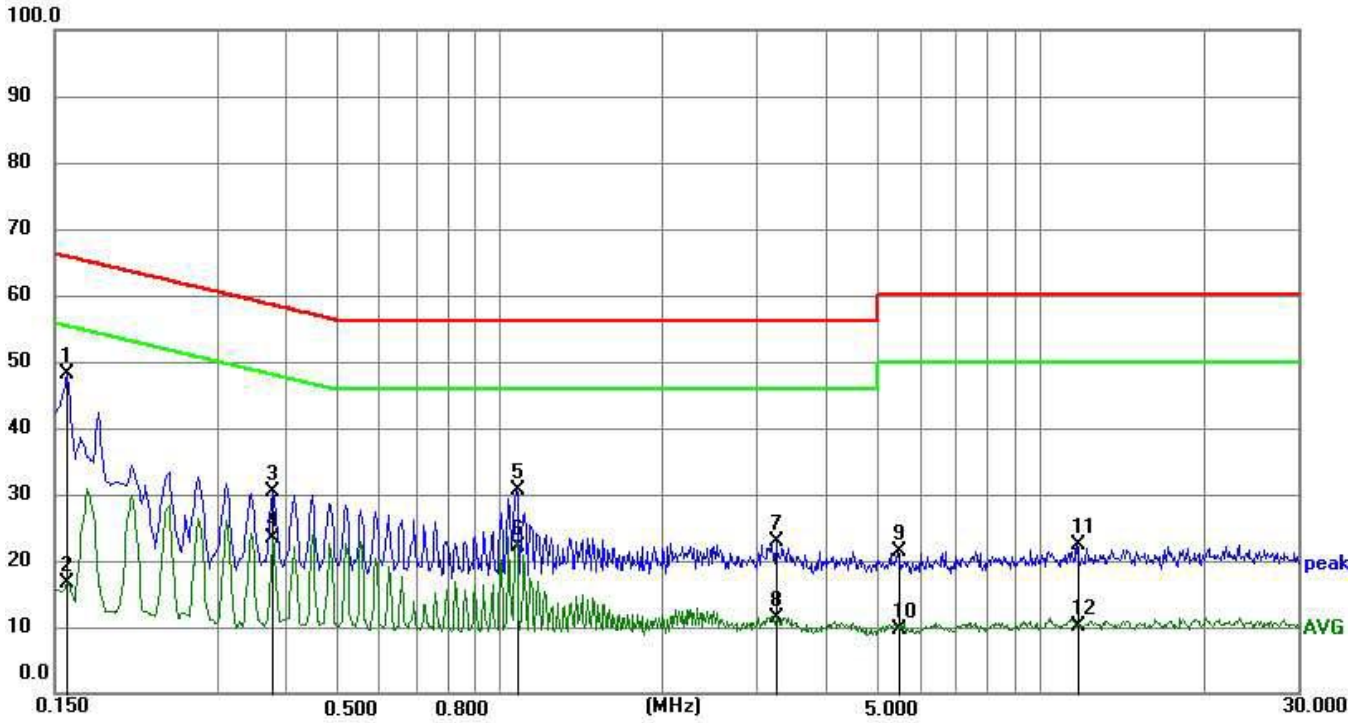

Temperature:	23.5℃	Relative Humidity:	59%
Phase:	N	Test Mode:	ASK
Test Voltage:	DC 5V		

No.	Frequency (MHz)	Reading (dBuV)	Correct Factor(dB/m)	Result (dBuV/m)	Limit (dBuV/m)	Margin (dB)	Remark
1	0.1905	52.46	10.06	62.52	64.01	1.49	QP
2	0.1905	14.19	10.06	24.25	54.01	29.76	AVG
3	0.2670	50.37	10.04	60.41	61.21	0.80	QP
4	0.2670	15.81	10.04	25.85	51.21	25.36	AVG
5	0.6583	24.42	9.99	34.41	56.00	21.59	QP
6	0.6583	8.65	9.99	18.64	46.00	27.36	AVG
7	1.9994	19.65	9.96	29.61	56.00	26.39	QP
8	1.9994	-0.68	9.96	9.28	46.00	36.72	AVG
9	4.4565	12.82	9.90	22.72	56.00	33.28	QP
10	4.4565	-1.08	9.90	8.82	46.00	37.18	AVG
11	13.1144	10.38	9.82	20.20	60.00	39.80	QP
12	13.1144	0.66	9.82	10.48	50.00	39.52	AVG

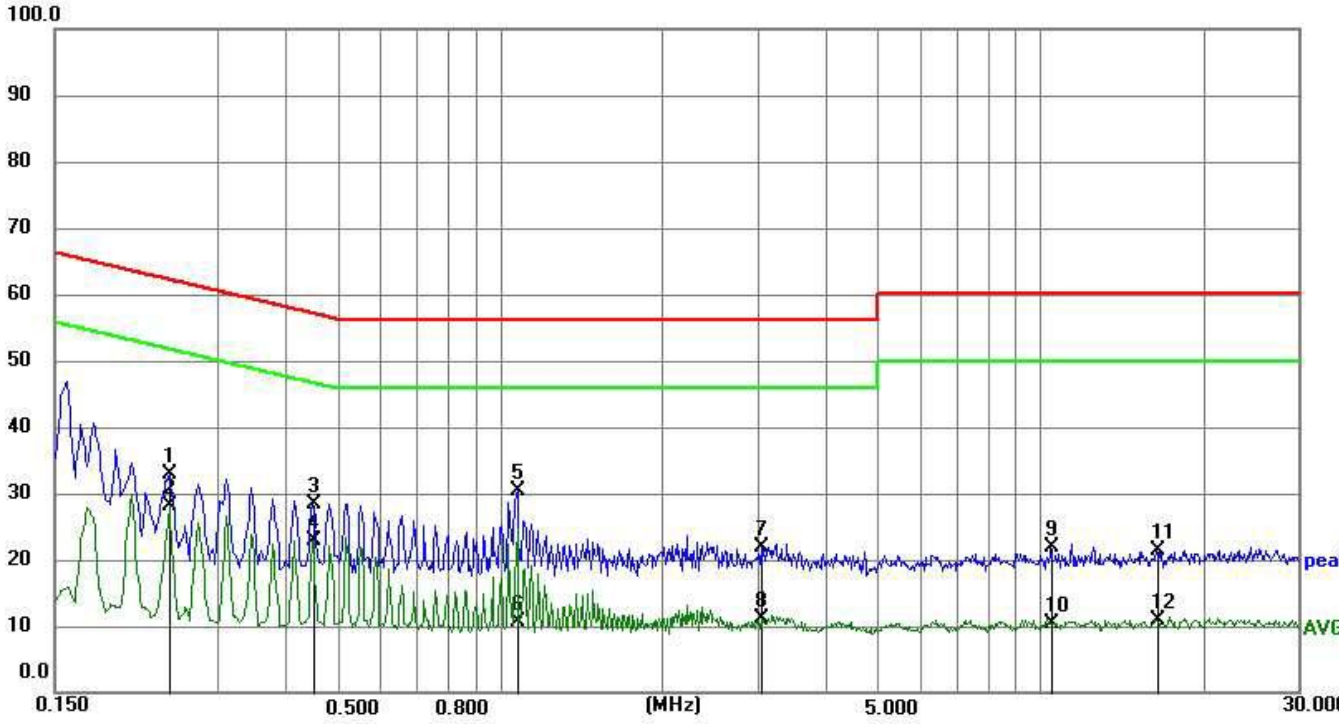

4. RADIATED EMISSION MEASUREMENT

4.1 LIMIT

FCC §15.225(A), (B), (C), (D)

LIMITS OF RADIATED EMISSION MEASUREMENT

Frequencies (MHz)	Field Strength (micorvolts/meter)	Measurement Distance (meters)
0.009~0.490	2400/F(KHz)	300
0.490~1.705	24000/F(KHz)	30
1.705~30.0	30	30
30~88	100	3
88~216	150	3
216~960	200	3
Above 960	500	3

For Above 1000 MHz, the emission limit in this paragraph is based on measurement instrumentation employing an average detector, measurement using instrumentation with a peak detector function, corresponding to 20 dB above the maximum permitted average limit.

4. For above 1000 MHz, limit field strength of harmonics: 54dBuV/m@3m (AV) and 74dBuV/m@3m (PK).

LIMITS OF FIELD STRENGTH OF THE FUNDAMENTAL SIGNAL

Frequency range (MHz)	Field Strength@30m		Field Strength@3m
	μV/m	dBμV/m	dBμV/m
Below 13.110	30	29.5	69.5
13.110 ~ 13.410	106	40.5	80.5
13.410 ~ 13.553	334	50.5	90.5
13.553 ~13.567	15.848	84	124
13.567 ~ 13.710	334	50.5	90.5
13.710 ~14.010	106	40.5	80.5
Above 14.010	30	29.5	69.5

NOTE:

1. Field Strength (dBμV/m) = 20*log[Field Strength (μV/m)].
2. In the emission tables above, the tighter limit applies at the band edges.

According to FCC section 15.225, for <30 MHz, Radiated emissions were measured according to ANSI C63.4. The EUT was set to transmit at the highest output power. The EUT was set 10 meter away from the measuring antenna. The loop antenna was positioned 1 meter above the ground from the center of the loop. The measuring bandwidth was set to 10 KHz. (Note: During testing the receive antenna was rotated about its axis to maximize the emission from the EUT) There was no detected Restricted bands and Radiated suprious emission below 30MHz. The 30m limit was converted to 3m Limit using square factor(x) as it was found by measurements as follows; 3 m Limit(dBuV/m) =20log(X)+40log(30/3)= 20log(15848)+40log(30/3) = 124dBuV

4.2 TEST PROCEDURE

a. The measuring distance of at 3 m shall be used for measurements at frequency 0.009MHz up to 1GHz,and above 1GHz.
b. The EUT was placed on the top of a rotating table 0.8 meters (above 1GHz is 1.5 m) above the ground at a 3 meter anechoic chamber test site. The table was rotated 360 degrees to determine the position of the highest radiation.
c. The height of the equipment shall be 0.8 m(above 1GHz is 1.5 m); the height of the test antenna shall vary between 1 m to 4 m. horizontal and vertical polarizations of the antenna are set to make the measurement.
d. The initial step in collecting conducted emission data is a spectrum analyzer peak detector mode pre-scanning the measurement frequency range. Significant peaks are then marked and then QuasiPeak detector mode re-measured.
e. If the Peak Mode measured value compliance with and lower than Quasi Peak Mode Limit, the EUT shall be deemed to meet QP Limits and then no additional QP Mode measurement performed.
f. For the actual test configuration, please refer to the related Item –EUT Test Photos.

Note:
Both horizontal and vertical antenna polarities were tested and performed pretest to three orthogonal axis. The worst case emissions were reported

4.3 TEST SETUP

(A) Radiated Emission Test-Up Frequency Below 30MHz

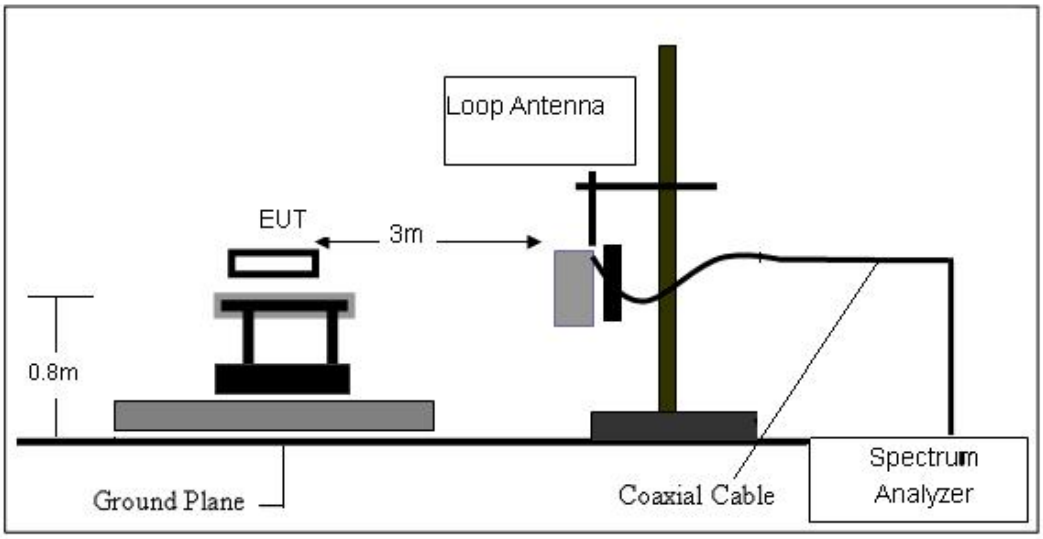

(B) Radiated Emission Test-Up Frequency 30MHz~1GHz

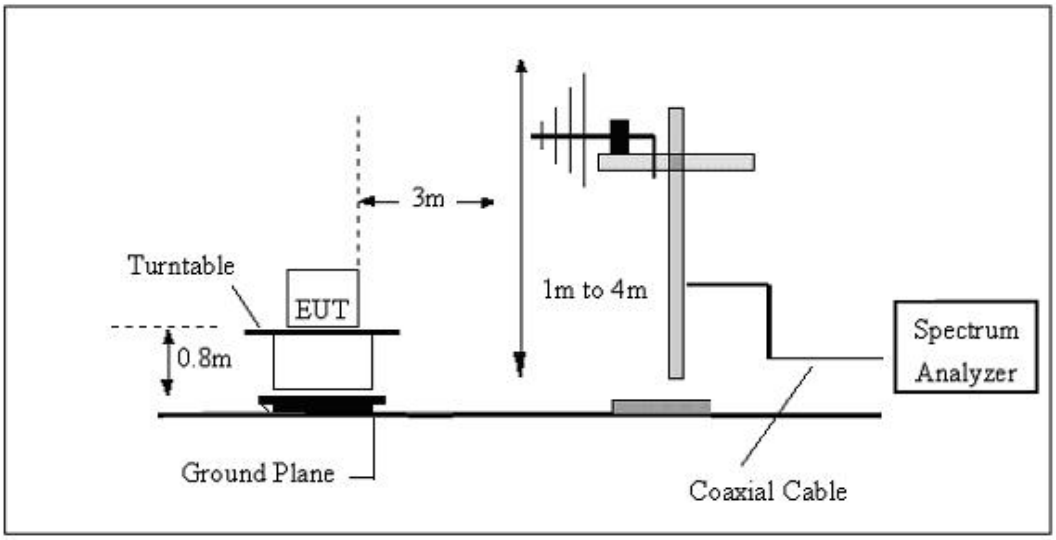

4.4 TEST RESULTS

Temperature:	25℃	Relative Humidity:	60%
Test Mode:	ASK	Test Voltage:	DC 5V

For field strength of the fundamental signal

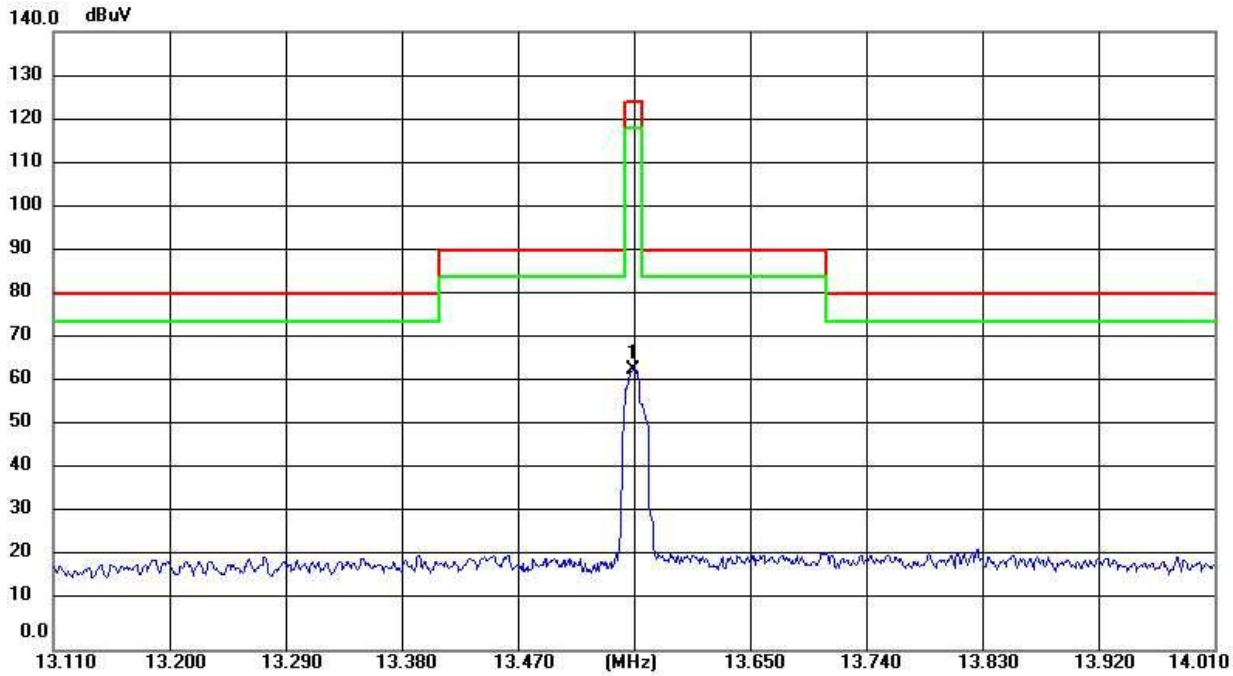

No.	Frequency (MHz)	Reading (dBuV)	Factor (dB/m)	Level (dBuV/m)	Limit (dBuV/m)	Margin (dB)	Detector
1	13.5600	73.64	-10.01	63.63	124.00	-60.37	QP

**Note: Factor= Antenna Factor + Cable Loss*

Measured（dBμV/m）= Reading + Factor, Margin= Measured - Limit

Emission level (dBμV/m) = 20 log Emission level (μV/m).
Measured distance is 3m.
All emissions emit from non-NFC function of digital unintentional emissions. All NFC's spurious emissions are below 20dB of limits.
X axis / Y axis/ Z axis were tested,report only recorded the worst result of X axis.

For spurious emission

(9KHz-30MHz)
Note: Only recorded the worst test result.

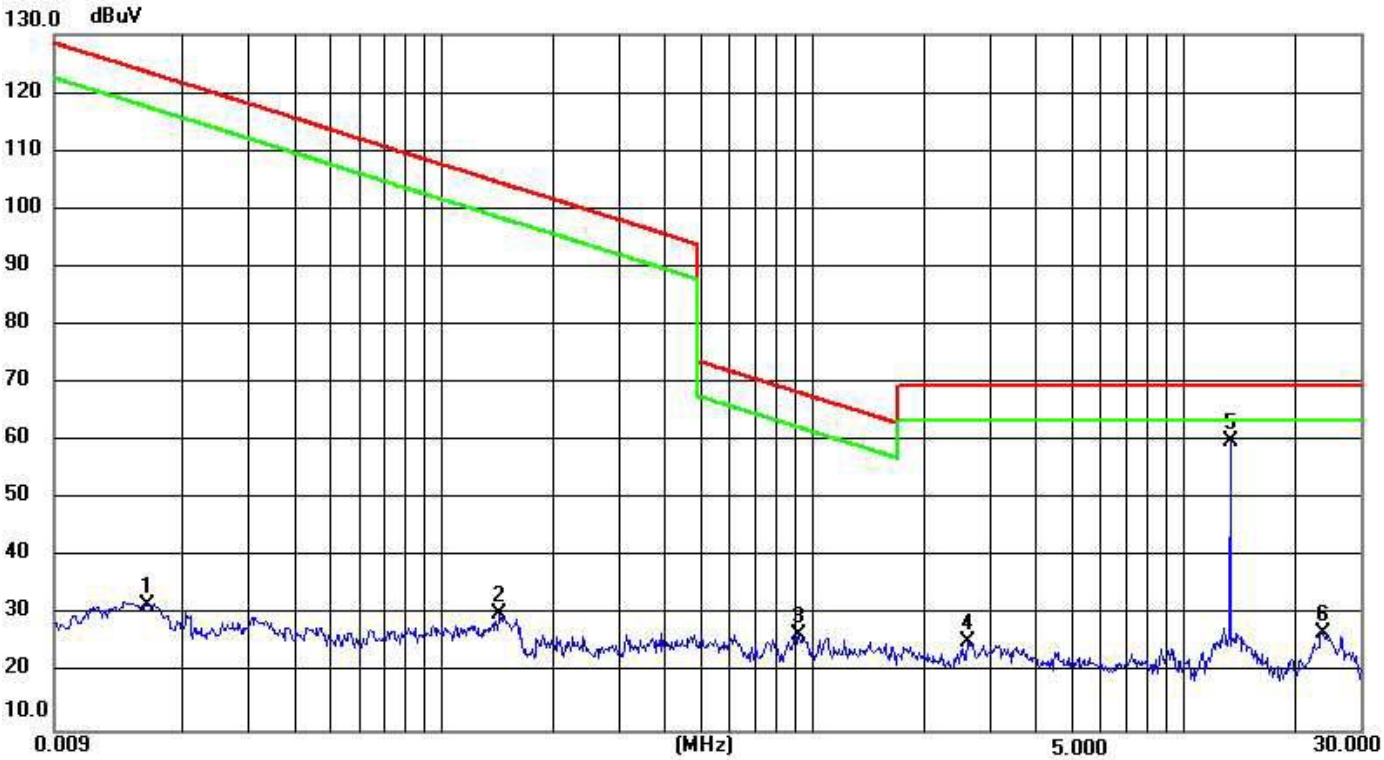

No.	Frequency (MHz)	Reading (dBuV)	Factor (dB)	Level (dBuV)	Limit (dBuV)	Margin (dB)	Detector
1	0.0160	40.86	-9.22	31.64	123.53	-91.89	QP
2	0.1431	39.97	-9.68	30.29	104.50	-74.21	QP
3	0.9168	36.50	-9.77	26.73	68.34	-41.61	QP
4	2.6106	34.76	-9.30	25.46	69.50	-44.04	QP
5 *	13.5601	69.31	-9.40	59.91	69.50	-9.59	QP
6	23.7114	37.06	-10.02	27.04	69.50	-42.46	QP

1. 13.56 MHz is fundamental signal which can be ignored.
2. The amplitude of spurious emissions which are attenuated by more than 20dB below the permissible value has no need to be reported.
3. Distance extrapolation factor = 40 log (specific distance / test distance) (dB);
4. Limit line = specific limits (dBμV) + distance extrapolation factor

(30MHZ-1000MHZ)

Temperature:	23.7℃	Relative Humidity:	61%
Test Voltage:	DC 5V	Phase:	Horizontal
Test Mode:	ASK		

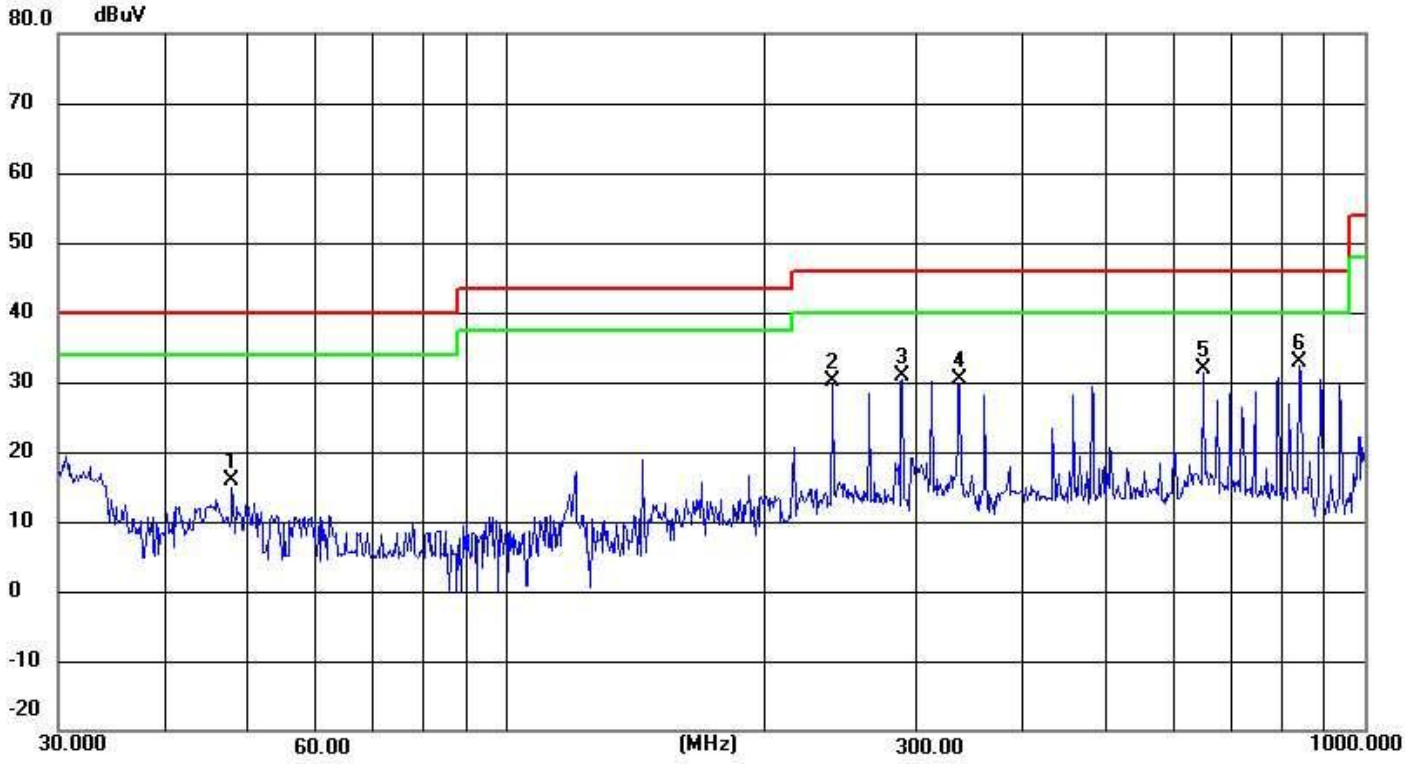

No.	Frequency (MHz)	Reading (dBuV)	Correct Factor(dB/m)	Result (dBuV/m)	Limit (dBuV/m)	Margin (dB)	Remark
1	47.8260	32.92	-17.02	15.90	40.00	-24. 10	QP
2	239.9873	62.28	-32.16	30.12	46.00	-15.88	QP
3	289.0020	63.06	-32.11	30.95	46.00	-15.05	QP
4	337.2155	62.53	-32.06	30.47	46.00	-15.53	QP
5	647.3855	63.53	-31.70	31.83	46.00	-14. 17	QP
6	839.1817	64.35	-31.46	32.89	46.00	-13. 11	QP

Temperature:	22.7℃	Relative Humidity:	61%
Test Voltage:	DC 5V	Phase:	Vertical
Test Mode:	ASK		

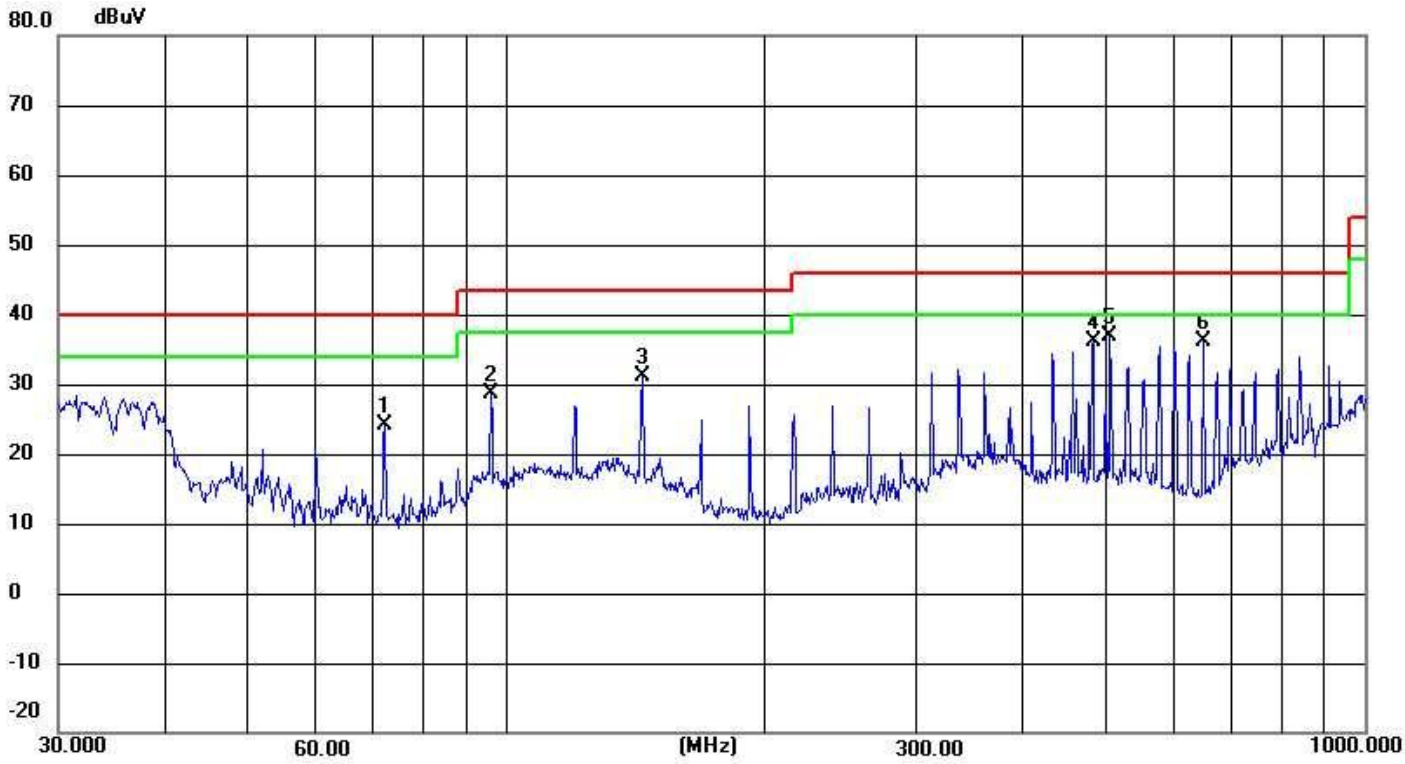

No.	Frequency (MHz)	Reading (dBuV)	Correct Factor(dB/m)	Result (dBuV/m)	Limit (dBuV/m)	Margin (dB)	Remark
1	72.0841	56.45	-32.24	24.21	40.00	-15.79	QP
2	95.7622	60.99	-32.29	28.70	43.50	-14.80	QP
3	143.8293	63.32	-32.26	31.06	43.50	-12.44	QP
4	482.2155	68.03	-31.92	36.11	46.00	-9.89	QP
5	504.7062	68.88	-31.89	36.99	46.00	-9.01	QP
6	647.3854	67.71	-31.70	36.01	46.00	-9.99	QP

5. 20 DB BANDWIDTH TEST

5.1 TEST PROCEDURE

FCC §2.1049&15.215(C)

Emissions from the intentional radiator shall be confined within a band 200 kHz wide centered on the operating frequency.

The 20dB bandwidth is measured with a spectrum analyzer connected via a receiver antenna placed near the EUT

while the EUT is operating in transmission mode.

Use the following spectrum analyzer settings:

Span = approximately 2 to 3 times the 20 dB bandwidth

RBW ≥ 1% of the 20 dB bandwidth

VBW ≥ RBW

Sweep = auto

Detector function = peak

Trace = max hold

5.2 TEST SETUP

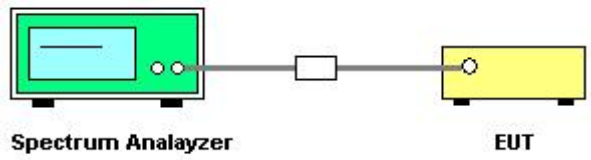

5.3 TEST RESULTS

Temperature:	25℃	Relative Humidity:	50%
Test Mode:	ASK	Test Voltage:	DC 5V

Frequency	20dB Bandwidth (KHz)	99%OBW (KHz)	Result
13.56 MHz	27.33KHZ	23.067	PASS

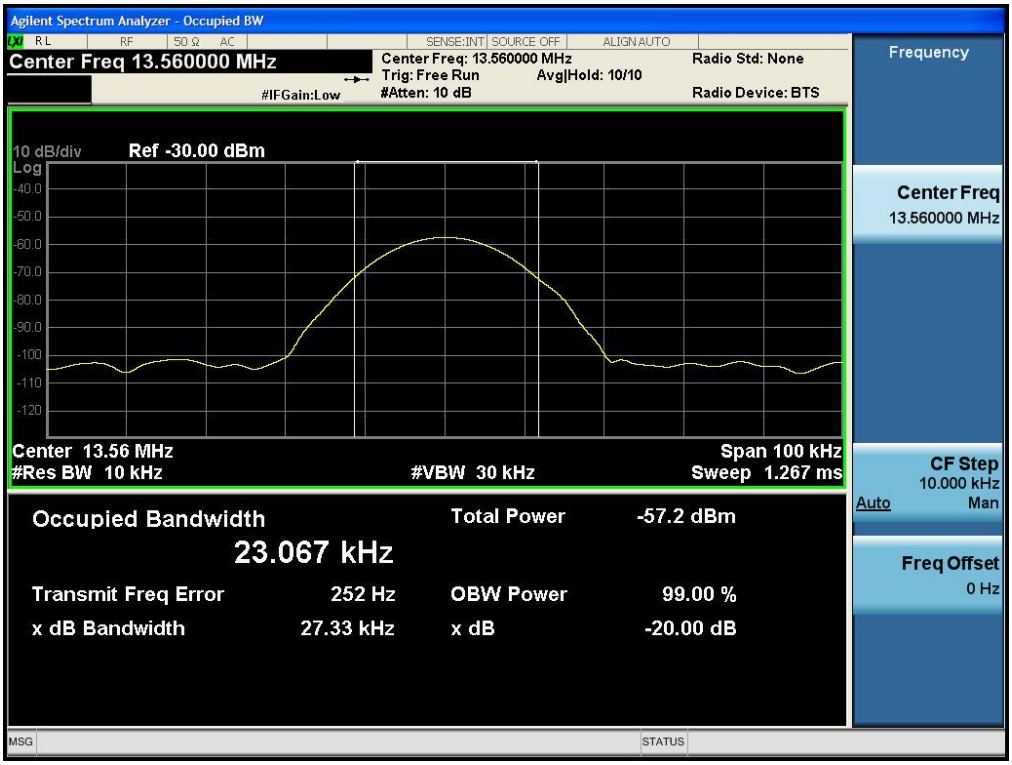

6 FREQUENCY STABILITY MEASUREMEN

6.1 LIMIT

The frequency tolerance of the carrier signal shall be maintained within +/- 0.01% (100ppm) of the operating frequency over a temperature variation of -20 degrees to +50 degrees C at normal supply voltage, and for a variation in the primary supply voltage from 85% to 115% of the rated supply voltage at a temperature of 20 degrees C. For battery operated equipment, the equipment tests shall be performed using a new battery

6.2 TEST PROCEDURE

1. The transmitter output (antenna port) was connected to the spectrum analyzer.
2. EUT have transmitted signal and fixed channelize.
3. Set the spectrum analyzer span to view the entire emissions bandwidth.
4. Set RBW = 1 kHz, VBW = 3 kHz with peak detector and maxhold settings.
5. The fc is declaring of channel frequency. Then the frequency error formula is $(fc-f)/fc \times 10^6$ ppm and the limit is less than ±100ppm.
6. Extreme temperature rule is -20°C~50°C.

6.3TEST RESULTS

Power Supply (VDC)	Temperature (℃)	Measured Frequency (MHz)	Frequency Deviation	Limit
5	-20	13.560566	0.0042%	+/-0.01%
	-10	13.560476	0.0035%	
	0	13.560425	0.0031%	
	10	13.560441	0.0033%	
	20	13.560364	0.0027%	
	30	13.560351	0.0026%	
	40	13.560386	0.0028%	
	50	13.560353	0.0026%	
5.9	20	13.560440	0.0032%	
4.1	20	13.560366	0.0027%	

7 ANTENNA REQUIREMENT

7.1 STANDARD REQUIREMENT

15.203 requirement: For intentional device, according to 15.203 an intentional radiator shall be designed to ensure that no antenna other than that furnished by the responsible party shall be used with the device.

7.2 EUT ANTENNA

The antennas used for this product are Internal antenna and other than that furnished by the responsible party shall be used with the device, the maximum peak gain of the transmit antenna is 0 dBi.

※※※※※END OF THE REPORT※※※※※