EV-Charger User Manual

Please read this instruction manual carefully before operating, and keep this instruction manual properly.

Contents

1. Safety rules 1

2. Product introduction 2

3. Main technical parameters.....3

4. Installation guide 4

4.1 Packing List.....4

4.2 Installation Precaution.....5

4.3 Installation steps.....7

4.3.1 EV charger installation.....7

4.3.2 Gun holder installation.....9

4.3.3 Requirements for wall installation.....10

4.3.4 Requirements for column mount.....11

4.4 Description of lights.....12

5. Using the APP.....13

6. Appendix: 15

6.1 Troubleshooting of general faults.....15

Warranty Registration Form.....16

1. Safety rules

DANGER!

- Be sure to cut off the power supply during the installation and replacement of the charging station to prevent electric shock.
- All work must be carried out by qualified electrician who has knowledge of and experience in dealing with electrical installations. The company will not bear any responsibility for any loss caused by unauthorized installation and modification.
- The cable of this device must be firmly connected.
- The device is not to be used by children or persons with reduced physical sensory or mental capabilities, or lack of experience and knowledge, unless they have been given supervision or instruction.
- Children should be supervised to ensure that they do not play with the device.

CAUTION!

- During operation, the EV-Charger may become hot.
- Incorrect operation or misuse may result in:

  Injury or death to the operator or third parties.

  Damage to the device and other property of the operator.

  Inefficient operation of the device.

Risk of electric shock!

Danger of high voltages.

Can not be disposed.

Can be recycled.

2. Product introduction

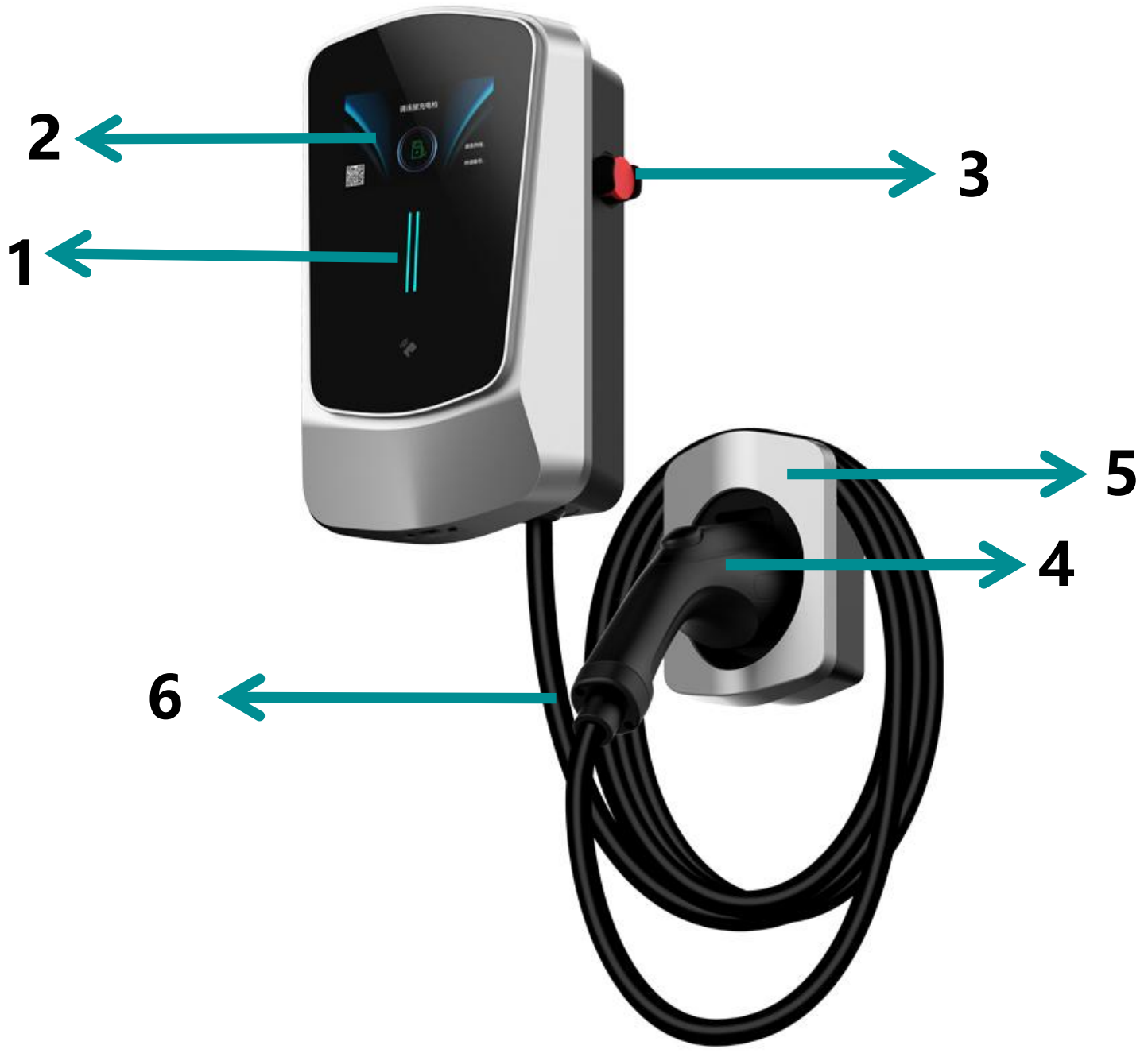

1. **LED indicator**: different colors indicate different states;
2. **LCD screen**: 4.3 inch, displaying charging information;
3. **Emergency stop**: in case of emergency, press here to cut off the output;
4. **Charging gun**: universal J1772 connector(additional adapter needed for Tesla);
5. **Charging gun base**: for holding the charging gun;
6. **Charging cable**: 25ft cable.

3. Main technical parameters

Input	
Power Supply	L+N+PE
Voltage	AC 240V
Rated current	32A
Frequency	50/60HZ
Output	
Output voltage	AC 240V
Output current	32A
Power	7KW
User interface	
Cable length	25ft
Outer case	PC940
LED indicator	Green/blue/red (blue - standby; green - charger connected to the vehicle, flashing - charging; red - abnormal)
Emergency stop	include
Start-up mode	
Plug-and-Play	Yes
Swipe card	Yes
Screen	
4.3-inch	Yes
Network	
RJ45	Yes
Bluetooth/WiFi	Yes
Security	
RCD	A +ccid20
Ingress Protection	IP66
Surge Protection	IK10
Electrical Protection	Overvoltage protection, undervoltage protection, grounding protection, lightning protection, leakage protection, flame retardant protection, overcurrent protection, intelligent temperature control protection, relay adhesion protection, input shutdown protection, vehicle specification level protection vehicle and protective personnel
Environment	
Installation	Wall-mount/Pole-mount
Working Temperature	-22°F~+122°F
Storage temperature	-40°F~+176°F
Operating humidity	5%~95% no moisture condensation or frost
Working Height	<2000M

4. Installation guide

4.1 Packing List

Open the package and fetch out the product, check the accessories at first. The packing list is shown as below.

A

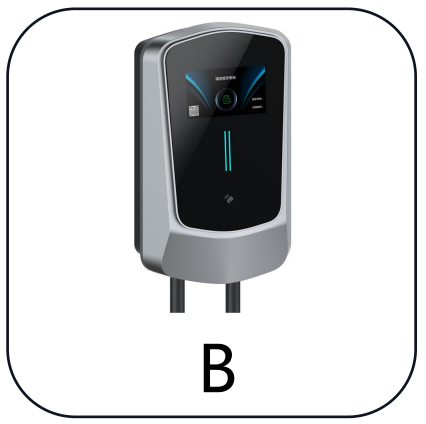

B

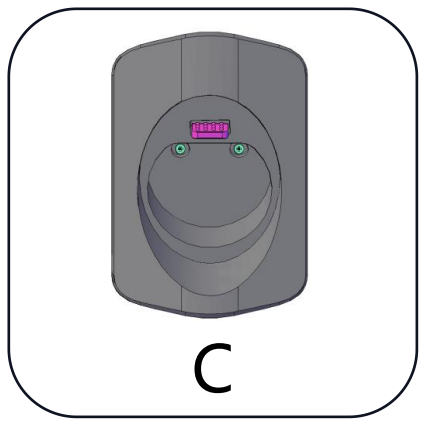

C

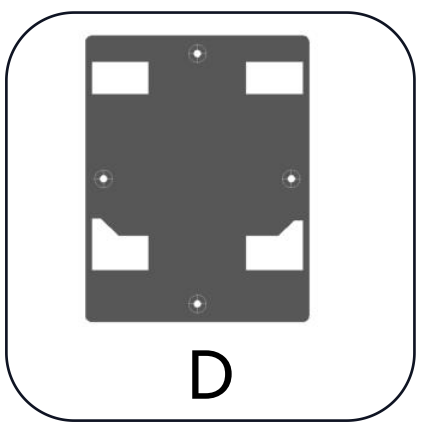

D

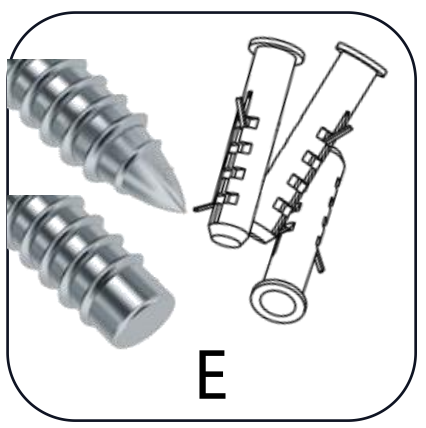

E

F

Object	Quantity	Description
A	1	Manual
B	1	EV-Charger
C	1	Gun base
D	1	Wall bracket
E	1	Gun Base Installation Kit: Expansion bolt(M6*30MM) * 3 PWA3.5*30*8mm/cone point screw with Gasket * 3 PB3.0*8mm/flat point screw * 2
F	1	EV-Charger Installation Kit: Expansion bolt(M6*30MM) * 4 PA30*10mm/round head screw * 2 KA3.5*35mm/truss head screw * 4

4.2 Installation Precaution

Environment requirements

- Make sure the installation site meets the following conditions:
- Not exposed to sunlight directly.
- Not in areas where highly flammable materials are stored.
- Not in potential explosive areas.
- Not near the television antenna or antenna cable.
- Not higher than altitude of about 2000 m above sea level.
- Not in environment of precipitation or humidity.
- Make sure that the ventilation is good enough.The ambient temperature in the range of -22°F ~ +122°F.
- The slope of the wall should be within +5” .

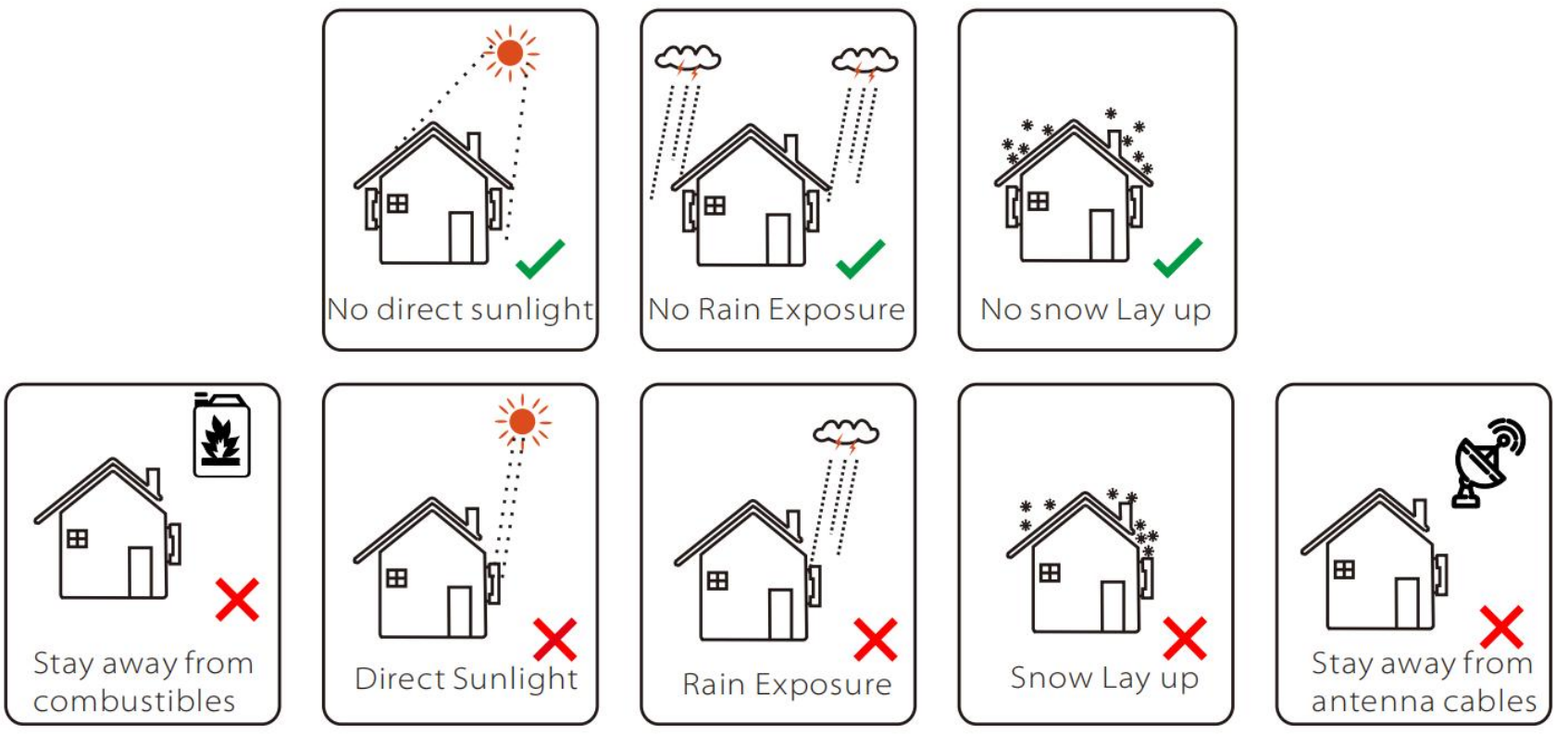

Attention:

- The EV charger should have an independent power circuit to avoid sharing it with other electrical equipment;
- To prevent the risk of electric shock, the equipment should ensure that the input ground wire is firmly grounded.

Preparation

- Hire an certified electrician to install a 240V NEMA 14-50 outlet ≥40 amps in your home

FAQ about NEMA 14-50 Outlet	
WHAT IS A NEMA 14-50 OUTLET?	NEMA 14-50 outlets are used for in-home EV charging stations that offer level 2 charging. However, they require more power than the standard 120-volt outlet. Instead, they use 240 volts.
	Typically, the outlets use ceramic or glass insulators that can meet the demands of extensive charging stations. Using sub-standard insulators, such as fiberglass, will lead to them melting after a few rounds of charging.
Can My Local Electrician Install the Outlet for Me?	Yes, any certified electrician can install an EV charging station at your home. However, it is best to choose an electrician with prior experience in similar projects.
How Much Does the Installation Cost?	The cost for the installation varies and depends on several factors. For starters, the distance between the outlet and the power source can impact the cost significantly. Similarly, if your electric panel does not have enough space to add the outlet, you will need a subpanel, which can also increase the overall cost.
	However, the total cost, including permit fees, can range between $500 to $2500.
	Your electrician can provide a detailed quote after surveying your home in person.
Types of Installations	The NEMA 14-50 electric charging station can be installed in two different ways. These include a hardwired installation and a plug-in installation.
	You will require a GFCI breaker for plug-in installations, or it can pose safety hazards. Plus, this type of installation makes the charger portable. However, hardwired installation does not require a GFCI breaker and is relatively less expensive.
	You can consult your electrician about which option would suit you best.

- Below tools are needed before installing the EV Charger.

Φ6 Drill

Cross screwdriver

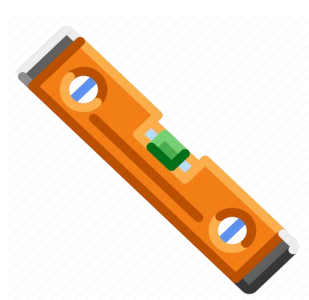

Spirit level

Hammer

4.3 Installation steps

4.3.1 EV charger installation

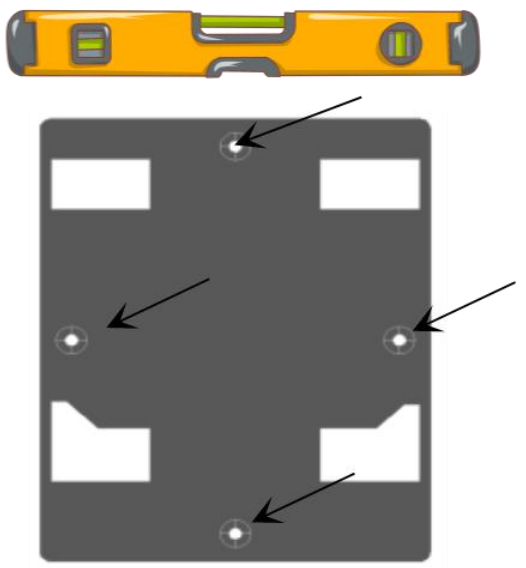	1. Attached the wall bracket of the EV charger to the horizontal position on the wall, and mark the position of the screw holes. (**Please note** that the special-shaped hole faces downward)
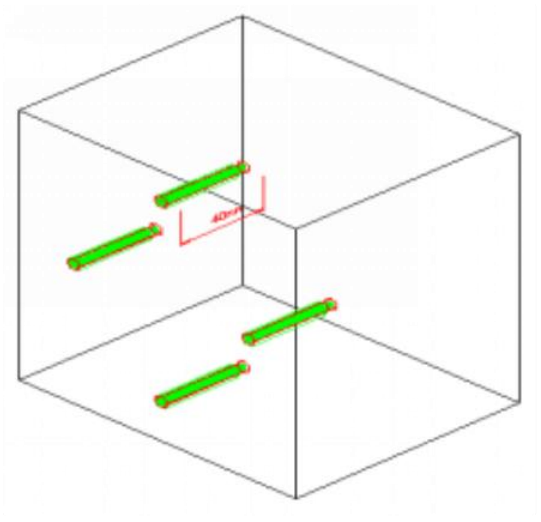	2. Use a Φ6mm drill bit to make 4 holes (hole depth >40mm) at the marked positions. Insert the anchors vertically, and the surface of the anchors should be flush with the wall.
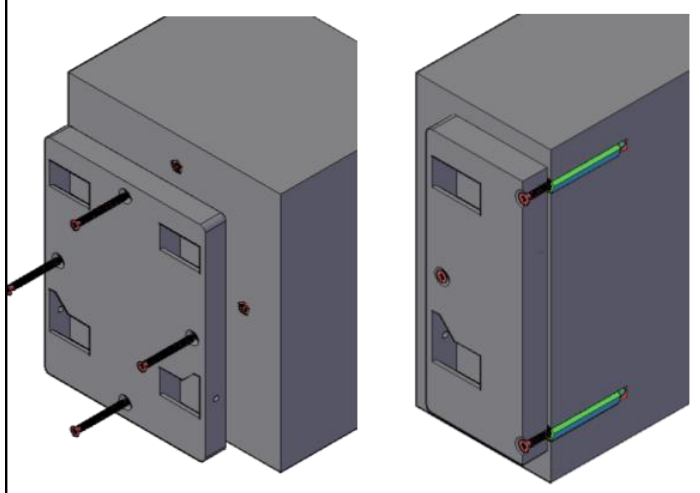	3. Thread the screws through the wall bracket and screw them vertically into the 4 holes on the wall. Make sure the wall bracket is not loose or deformed.
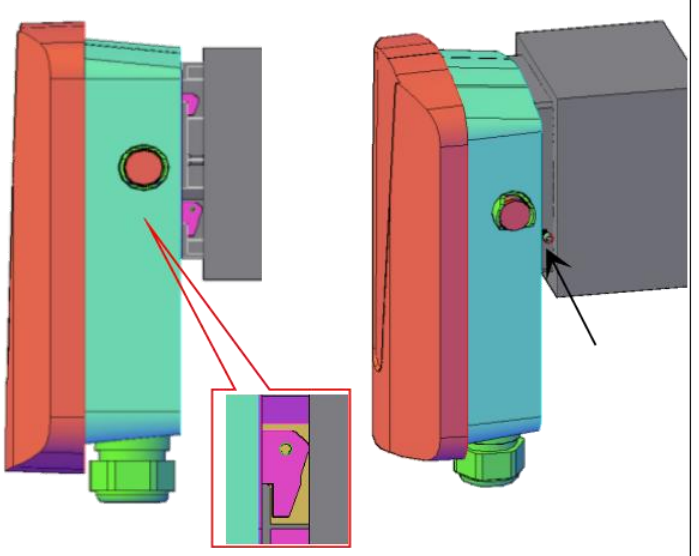	4. Press the device vertically into the wall bracket holes, and push the device down until the device is completely hung on the wall bracket, then lock the two anti-theft screws at the end.

4.3.2 Gun holder installation

Apart the gun holder into a front shell and a rear shell, then follow the steps below to install.

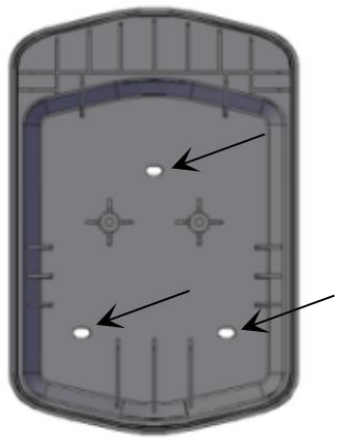	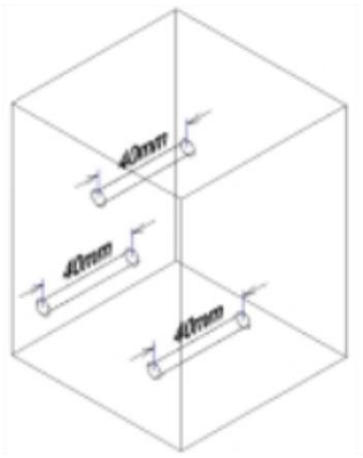
1. Place the gun holder to a suitable position on the wall, and mark the position of the screw holes.	2. Drill 3 holes at the marked positions with a Φ6mm drill bit (hole depth >40mm), insert the anchors vertically, make sure the surface of the anchors is flush with the wall.
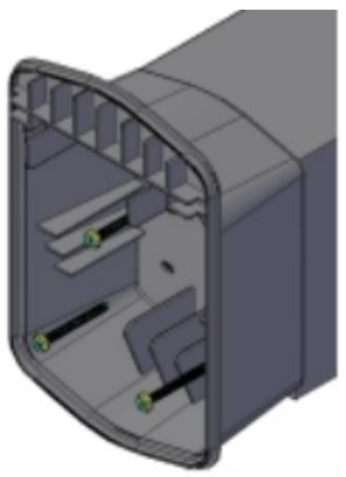	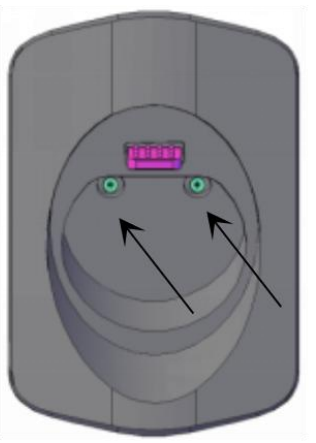
3. Insert the screws vertically into the gasket of the gun holder and the anchors to the end. Make sure that the gun holder is not loose or deformed.	4. Align the front shell of the gun holder with the rear shell and snap it in to the end, and tighten the 2 anti-theft screws as shown in the figure.

4.3.3 Requirements for wall installation

1. The center of the EV charger is about 1.5m above the ground;
2. Mark the screw holes on the wall;
3. Make sure that the cable can be coiled clockwise on the gun holder after installation, and the charging gun can be inserted into the gun holder;
4. Tighten the anti-theft screws;

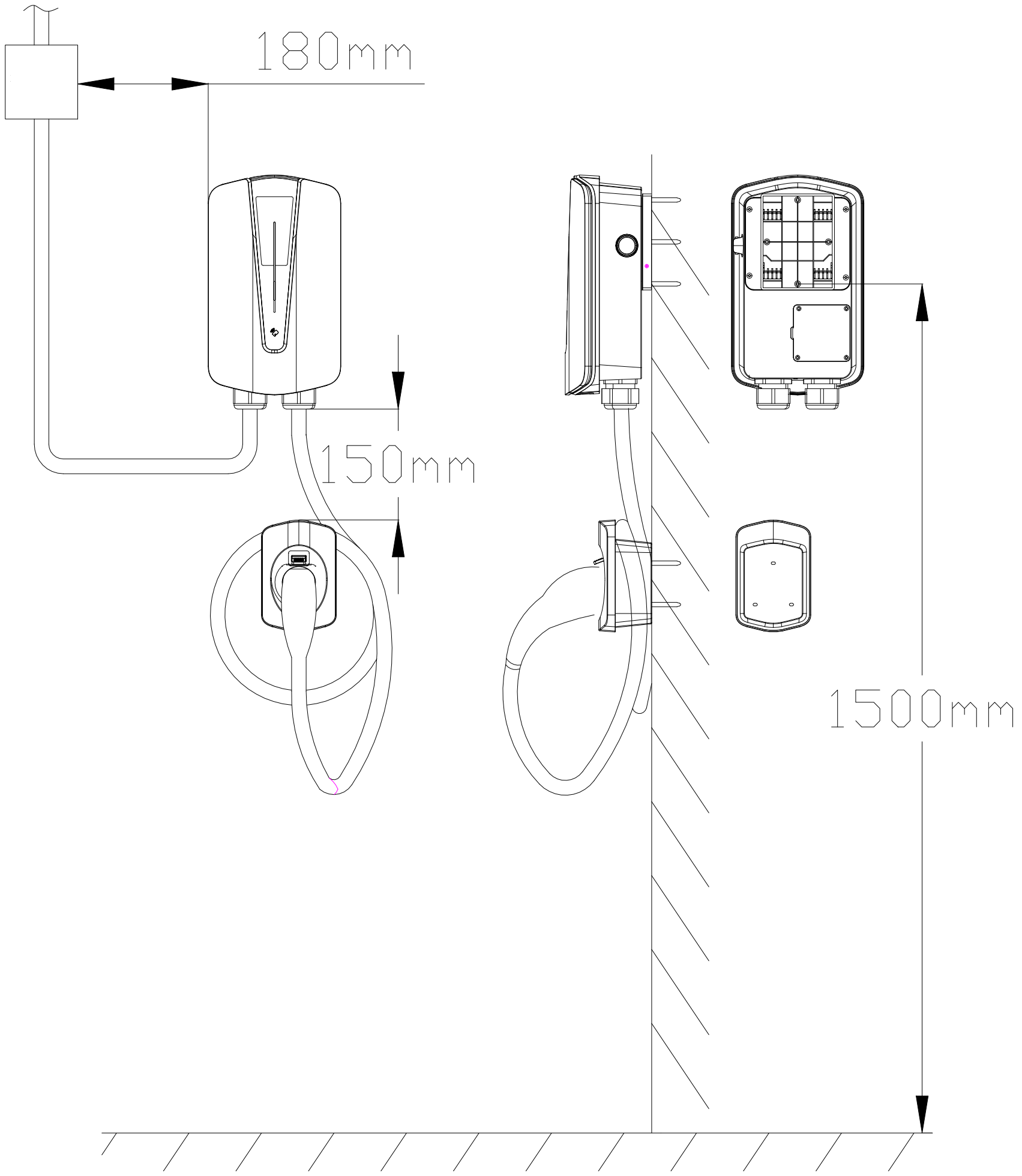

4.3.4 Requirements for column mount

1. The underground part of the column base is 40cm in concrete, and the aboveground part is 20cm. Concrete foundation dimensions: length 500mm x width 250mm x height 600mm. Embed the cable duct with a diameter of 50mm in the center of the foundation, and fix it with at least 4 anchors with a diameter of 12mm;
2. When the charging pile is more than 30 meters away from the distribution box, N*Φ10mm cable should be used.
3. Mark the screw holes on the wall;
4. Make sure that the cable can be coiled clockwise on the gun holder after installation, and the charging gun can be inserted into the gun holder;
5. Tighten the anti-theft screws;

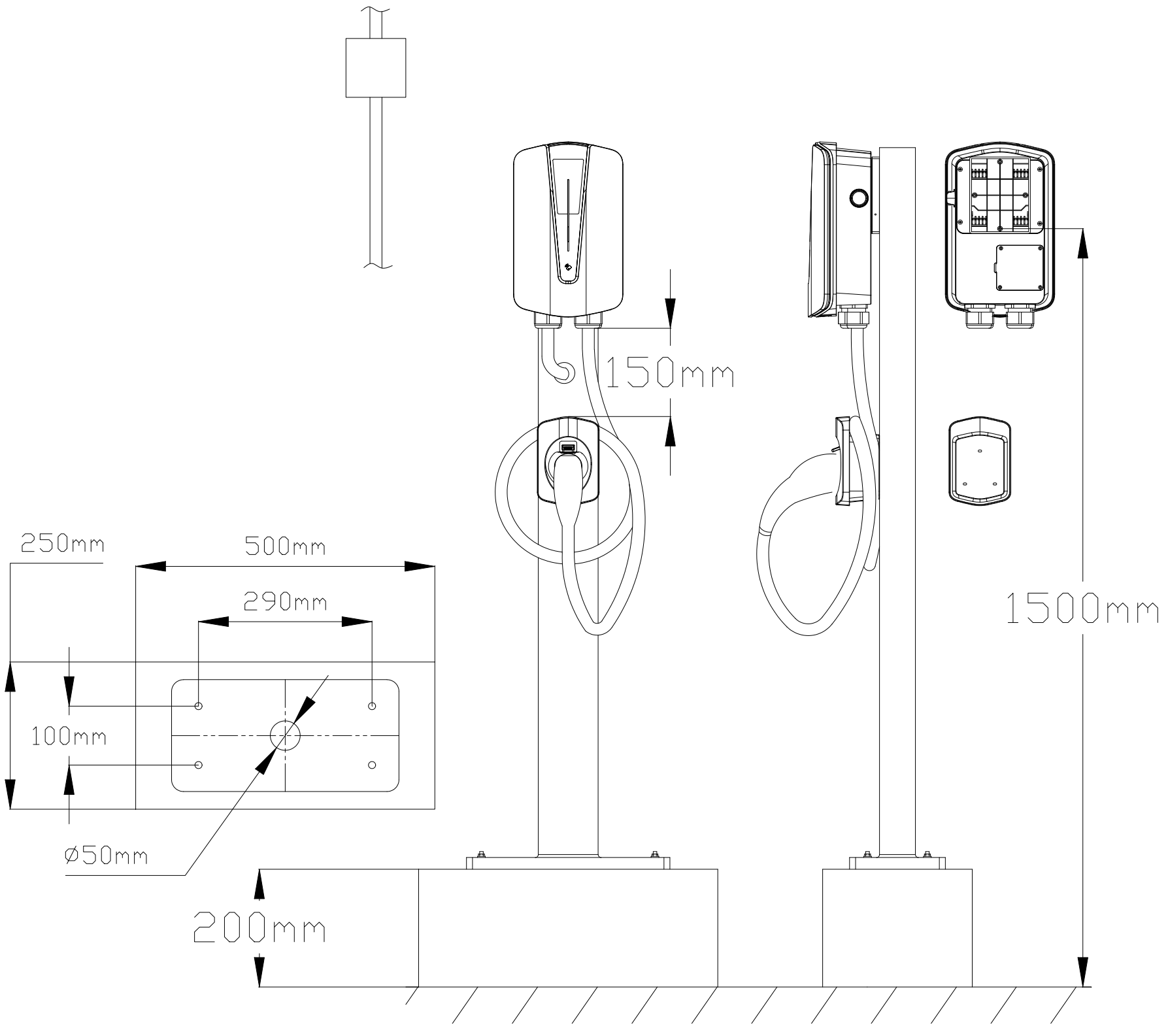

4.4 Description of lights

Column	Status	Charge pile status	LED status	Remarks
1	Normal	Standby	The blue light is always on	
2		Ready to Charge	The green light is always on	Charger not started
3		Charging	Green light flashes (500ms on, 500ms off)	Charger started charging
4		Charging completed	The green light is always on	The vehicle is fully charged or stops charging when the charging completion condition is reached, and the charger is not unplugged
5	Fault	Emergency stop fault	The red light is always on	In case of fault, the red light flashes for 200ms on and 200ms off
6		Ungrounded fault	The red light flashes twice every 5s	
7		CP error fault	The red light flashes 3 times every 5s	
8		Overcurrent fault	The red light flashes 4 times every 5s	
9		Overvoltage fault	The red light flashes 5 times every 5s	
10		Undervoltage fault	The red light flashes 6 times every 5s	
11		Breaker adhesion fault	The red light flashes 7 times every 5s	
12		Leakage fault	The red light flashes 8 times every 5s	
13		Overtemperature fault	The red light flashes 9 times every 5s	
14		Meter fault	The red light flashes 10 times every 5s	
15		Other faults	The red light is on for 1000ms and off for 1000ms.	

5. Using the APP

Download APP Tuya Smart or Smart Life from the APP store or Google Play.

Tuya

Smart Life

Connect the charging unit to the same WiFi that your phone is connected to.
Note that 5GHz WiFi is not supported. Stand near the charger and open the app.
If the network connection fails, please check that the router is working, that it is operating at 2.4Ghz (if applicable), and make sure you are not too far away from the charger!

App Demonstration

- Make sure the phone's **WiFi** and **Bluetooth** are turned on, and click the "+" or "Add Device" to automatically search for devices. After adding the device, enter the WIFI password connected by the mobile phone.

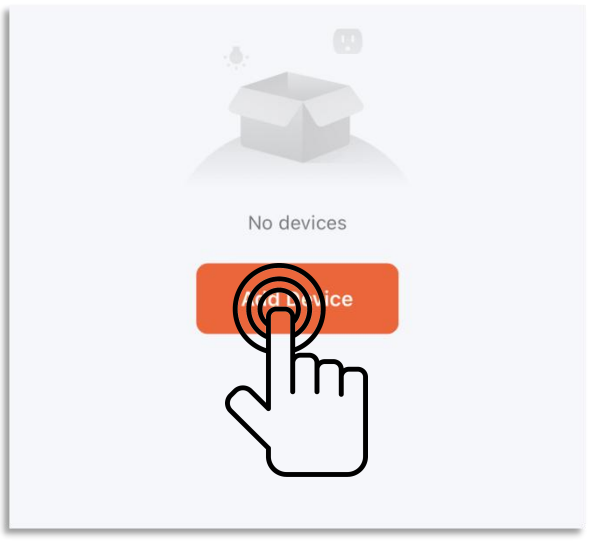

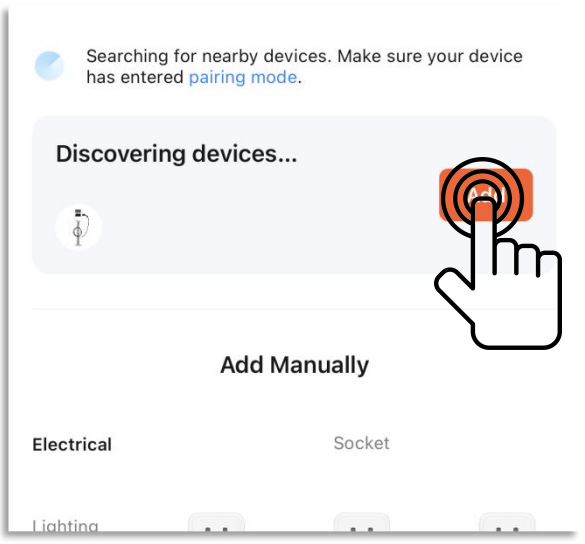

- After the connection is successful, it will automatically jump to the charging interface. Slide the icon to **start charging**.

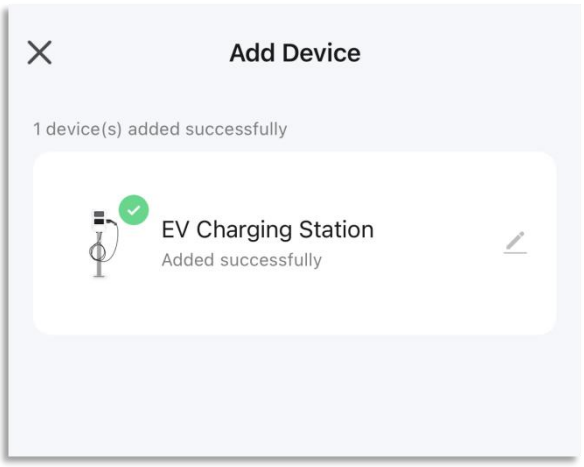

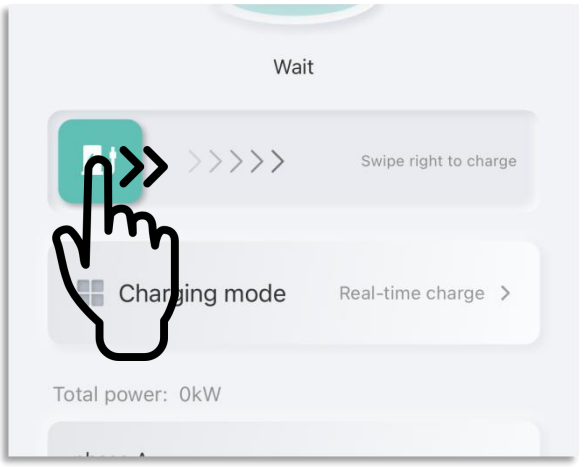

- Click the charging mode to choose **real-time charging** or **fixed time charges**.

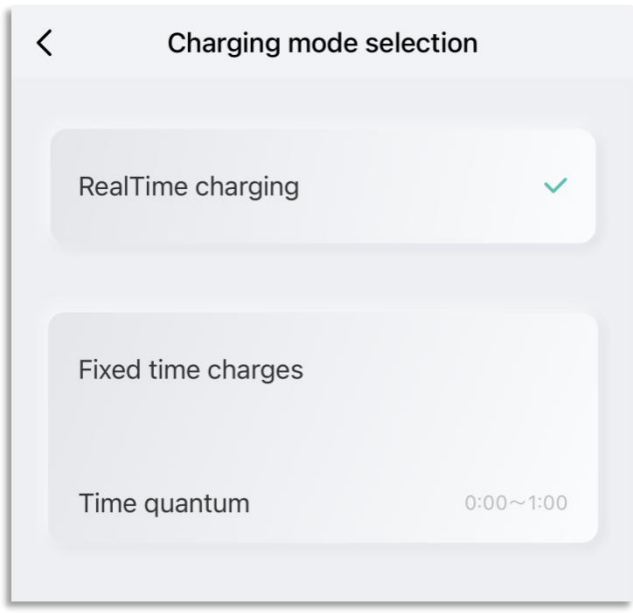

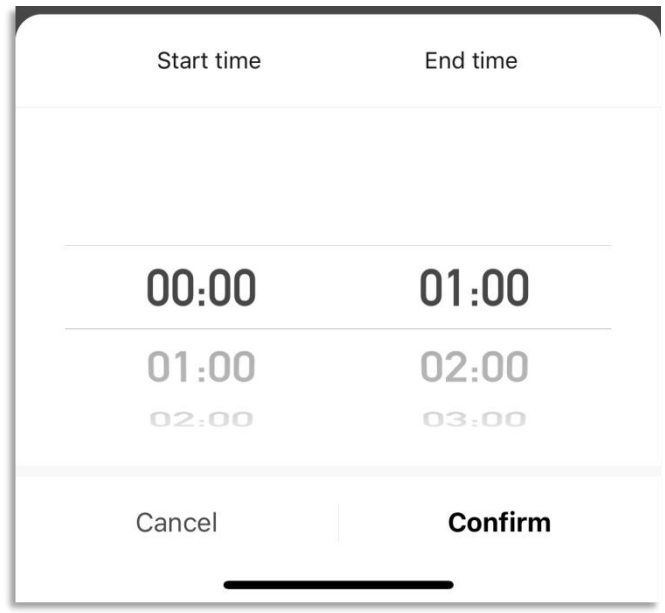

- Go to the Setting interface, click "Charging current" to **adjust the current**.

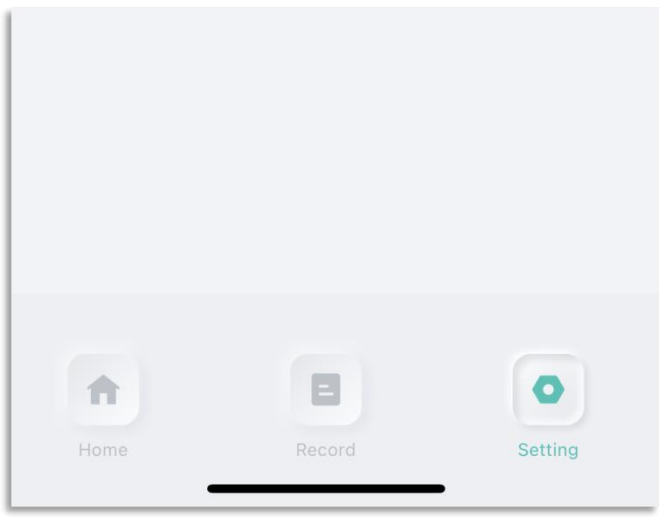

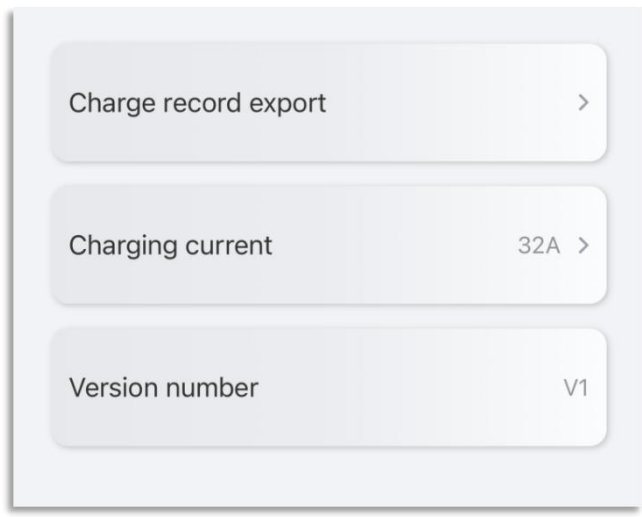

- Go to the Setting interface, click the "Charge record export" to send the **charging record** to your email. Or go to the Record interface to check the charging record.

- Select **Add Sharing** on the settings interface to share the device with your friends or family. (The APP supports multiple people to manage the same device, and multiple devices can be added at the same time)

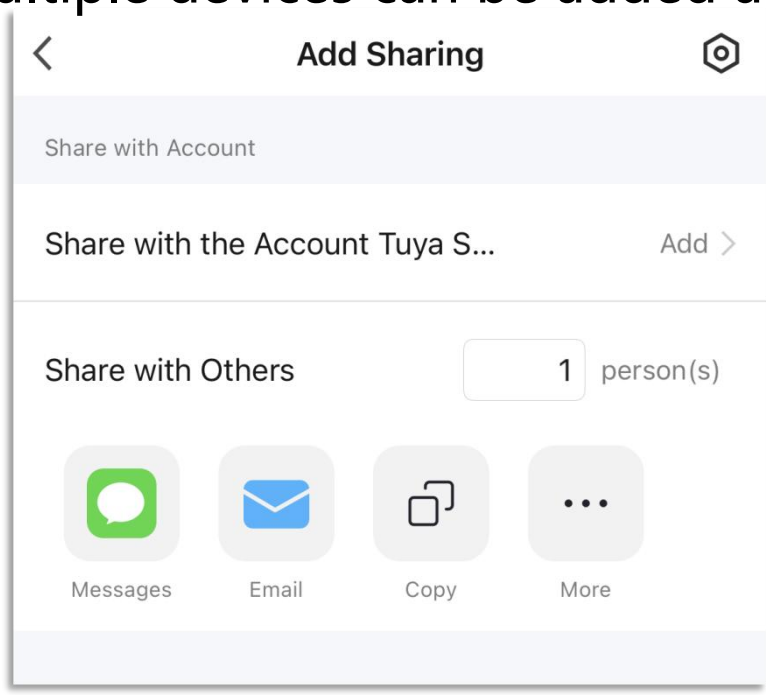

6. Appendix:

6.1 Troubleshooting of general faults

Fault phenomenon	Possible causes	Processing method
LED or display screen does not light up	The power supply is not well connected	Check whether the input power line is energized and whether the power switch is closed.
	Circuit breaker trip	The EV Charger has the function of leakage tripping, you need to open the side switch cover and close the circuit breaker switch.
	Equipment damage	Please contact the customer service for maintenance (see the Thank You card for contact information).
Unable to start charging	The charging gun is not fully connected	Check whether the charging gun is firmly connected to the vehicle socket and ensure that the charger is plugged into the bottom of the socket.
	Emergency stop button is pressed	Rotate the emergency stop switch in the direction indicated by the emergency stop button to restore the emergency stop switch to normal.
Charging current is less than rated value	Equipment failure or vehicle approaching full load	When the vehicle battery is close to being fully charged, the charging current will drop, which is normal. If it is not the case above, please contact the after-sales service for maintenance.

- All illustrations and product accessories in this manual are for reference only, please refer to the actual product for details. The company chooses to update product rights without prior notice.

Warranty Registration Form

For Customer (Compulsory)			
Name		Country	
Phone Number		Email	
Address			
State		Zip Code	
Product Serial Number			
Date of Commissioning			
Installation Company Name			
Installer Name		Electrician License No.	
1			
Warranty content			
After sales personnel		Customer signature	
2			
Warranty content			
After sales personnel		Customer signature	
3			
Warranty content			
After sales personnel		Customer signature	
4			
Warranty content			
After sales personnel		Customer signature	
5			
Warranty content			
After sales personnel		Customer signature	

If you are not satisfied with the product or have questions about usage, please contact us.

E-mail: wklxl2008@gmail.com

E-mail: jennyivy1234@gmail.com

E-mail: a372677803@gmail.com

Send E-mail to contact us.

Scan the QR code with Whatsapp to contact us.

FCC WARNING

This device complies with part 15 of the FCC Rules. Operation is subject to the following two conditions: (1) this device may not cause harmful interference, and (2) this device must accept any interference received, including interference that may cause undesired operation.

Any changes or modifications not expressly approved by the party responsible for compliance could void the user's authority to operate the equipment.

NOTE: This equipment has been tested and found to comply with the limits for a Class B digital device, pursuant to Part 15 of the FCC Rules. These limits are designed to provide reasonable protection against harmful interference in a residential installation. This equipment generates, uses and can radiate radio frequency energy and, if not installed and used in accordance with the instructions, may cause harmful interference to radio communications.

However, there is no guarantee that interference will not occur in a particular installation. If this equipment does cause harmful interference to radio or television reception, which can be determined by turning the equipment off and on, the user is encouraged to try to correct the interference by one or more of the following measures:

-- Reorient or relocate the receiving antenna.

-- Increase the separation between the equipment and receiver.

-- Connect the equipment into an outlet on a circuit different from that to which the receiver is connected.

-- Consult the dealer or an experienced radio/TV technician for help.

To maintain compliance with FCC’s RF Exposure guidelines, This equipment should be installed and operated with minimum 20cm distance between the radiator and your body: Use only the supplied antenna.