PabloX F40

2024-04

User MANUAL

V0.1

TECHNICAL SUPPORT

Revision Sheet

Version Number	Date	Author	Description
Ver 0.1	2024.04.18	Junwoo Hwangbo	

Table of Contents

Cover Page 1

Revision Table 2

Table of Contents 3

INTRODUCTION

Safety 5

Applications 6

Features 6

Specifications 6

Aircraft Features 7

FC / FC Board Specifications 11

AIRCRAFT MAINTENANCE

Propeller Replacement 14

Battery Installation 18

Pyro Mount 19

Battery Charging 21

Landing Strut Installation 23

Battery Operation 21

Periodic Maintenance 21

Consumable Parts Replacement Cycle 21

Content

Operation

Pre-Flight Briefing Checklist 64

Ground Control System Setup 64

Pre-Flight Physical Inspection Checklist 65

Pre-Flight Checklist 67

Reference & Technical Support 72

Abbreviations 73

INTRODUCTION

Safety - Aircraft Operation

- The rotating propellers can cause serious damage and injury. Fly with caution at all time.
- PABLO AIR is not be responsible for any losses caused by users not using the product in accordance with this manual.
- ESCs are not water-proof, do not fly in rain or snow.
- Ensure all parts are in good condition before each flight. Do not fly with worn or broken parts.
- Ensure propellers and motors are installed correctly.
- When flying, stay away a safe distance from people, buildings, tall trees, water and any obstacle.
- Always make sure the aircraft is well balanced if you are to fly with payload.
- Do not connect or disconnect electrical components when the aircraft is powered on.
- In the event of a LiPo battery fire, do not use water due to electrocution hazard. Electrical fire extinguisher (Class C) or sand / dirt may be used to try and smother fire. Do not attempt to approach fire or try to salvage components.
- **Caution flame when ignite firework cartridge.**
- **Beware hot cartridge after using firework.**

Safety - Battery operation

- Keep batteries away from metallic objects which could short their terminals.
- The battery operation temperature between -10°C to 40°C.
- For long-term storage, keep the temperature between 22°C and 28°C and charge the battery 40-60% recommended.
- When you store the batteries long-term, do not fully discharge.
- It is recommended to store batteries in a storage box.
- Do not overcharge and discharge the battery (damage to the battery cell).
- Recommended to fully charge once a quarter for battery life.
- Do not use swollen batteries.
- Do not leave the batteries in direct sunlight.
- Do not use batteries that have been dropped or damaged.

INTRODUCTION

Applications

This sUAS being a platform of drone light show with firework cartridge.
This platform is specifically designed for drone light show, equipped with LED and firework cartridge, controlled/monitored by SPH Drone Show Software, DSS.

Features

- Ultra-light materials and structural optimization to obtain longer flight time.
- The low center of gravity design makes the aircraft more reliable.
- The special-shaped design of motor arm makes the main structure safer and more reliable. The arms and landing gears can be folded and disassembled quickly.
- No tools required. Only 10 minutes to get ready to fly.
- Dual RTK GPS
- Delivery Box
- Integrated flight controller, communication, payload control into single board.

Specifications

Physical

- Dimension :470mm x 470 mm x 150 mm (with propeller)
  320 mm x 320 mm x 150 mm (hub to hub)
- Weight : 1050g, 2.31 lbs:(w/ battery)
- Maximum Payload : 300g, 0.66 lbs
- MTOW : 1350g, 2.97 lbs
- Propeller : 7” x 4.2”
- Power System : X-NOVA Smooth Line 2207-1850KV
- LiPo Battery : 77 Wh

Environmental

- Operation Temperature : -5℃ - 40℃
- Wind Limitation: 8 m/s, 6m/s with payload
- Precipitation Limit : None Allowed

Performance

- Flight Time : 16(TBD) min (no payload)
  12(TBD) min (with payload)
- Flight Speed : 20(TBD) m/s (Horizontal speed)
  6(TBD)m/s (Vertical speed)
- Max Operating Altitude : 1000 m
- Communication Range : WIFI(2.4GHz) - 1.2 km (LOS)
  LoRA(900MHz) - 3 km (LOS)

Aircraft Features : Motor Layout

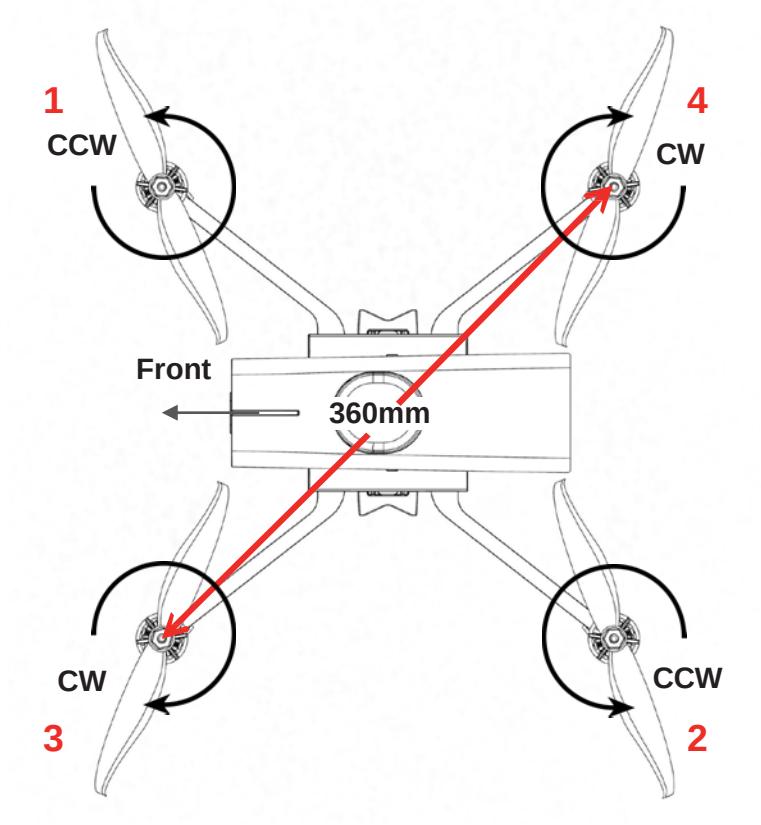

1. Height between FC and GNSS : 77.9mm

2. Height between Ground surface and FC : 72.3mm

3. Ground clearance : 331mm

4. Height of F40 : 178.2mm

FC / FC Board Specifications

FC Specifications

- Sensors

    1. Three redundant IMUs (accels, gyros and compass)
    2. ICM 20649 integrated accelerometer / gyro, MS5611 barometer on base board
    3. InvenSense ICM20602 IMU,ICM20948 IMU/MAG, MS5611 barometer on temperature controlled, vibration isolated board
    4. All sensors connected via SPI.

1. Propeller replacement (Figure 6)

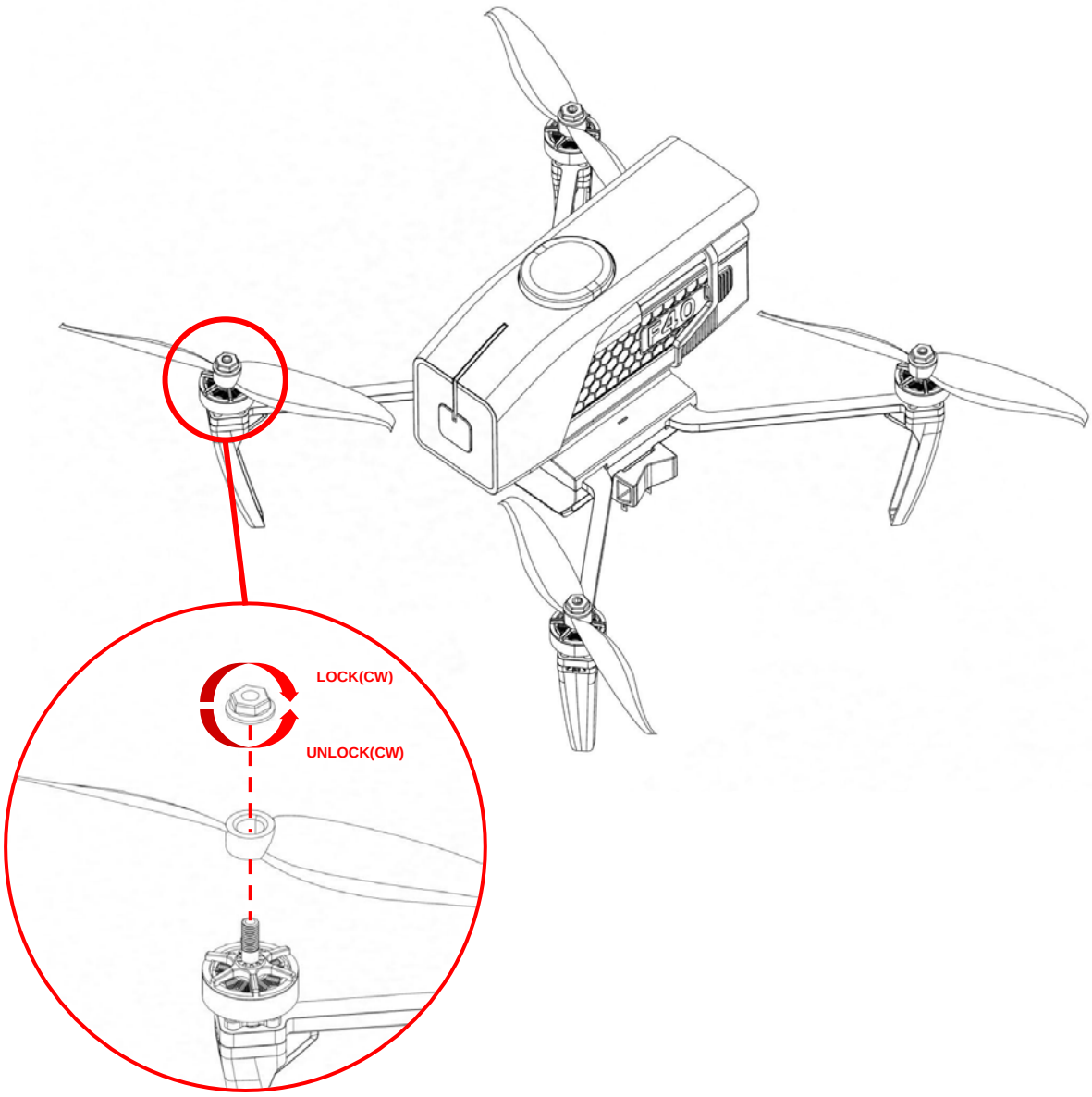

(Figure 6)

너트 체결 토크
(nut engagement torque)
195 - 200 N·cm
19.8 - 20 kgf·cm
17.3 - 17.7 lbf·in

2. **Battery pack installation completed as shown.** **(Figure 7)**

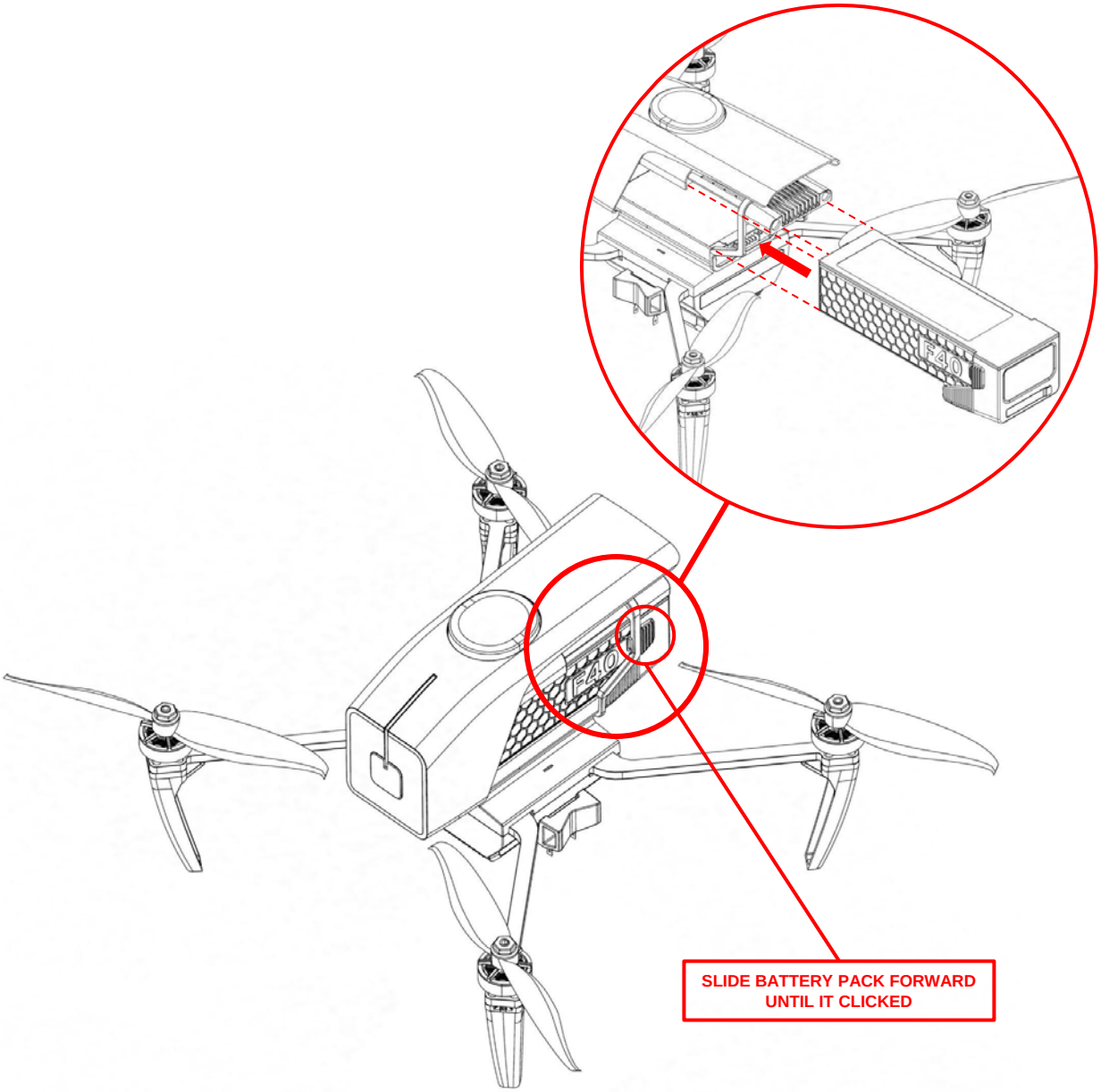

4. Battery Charging

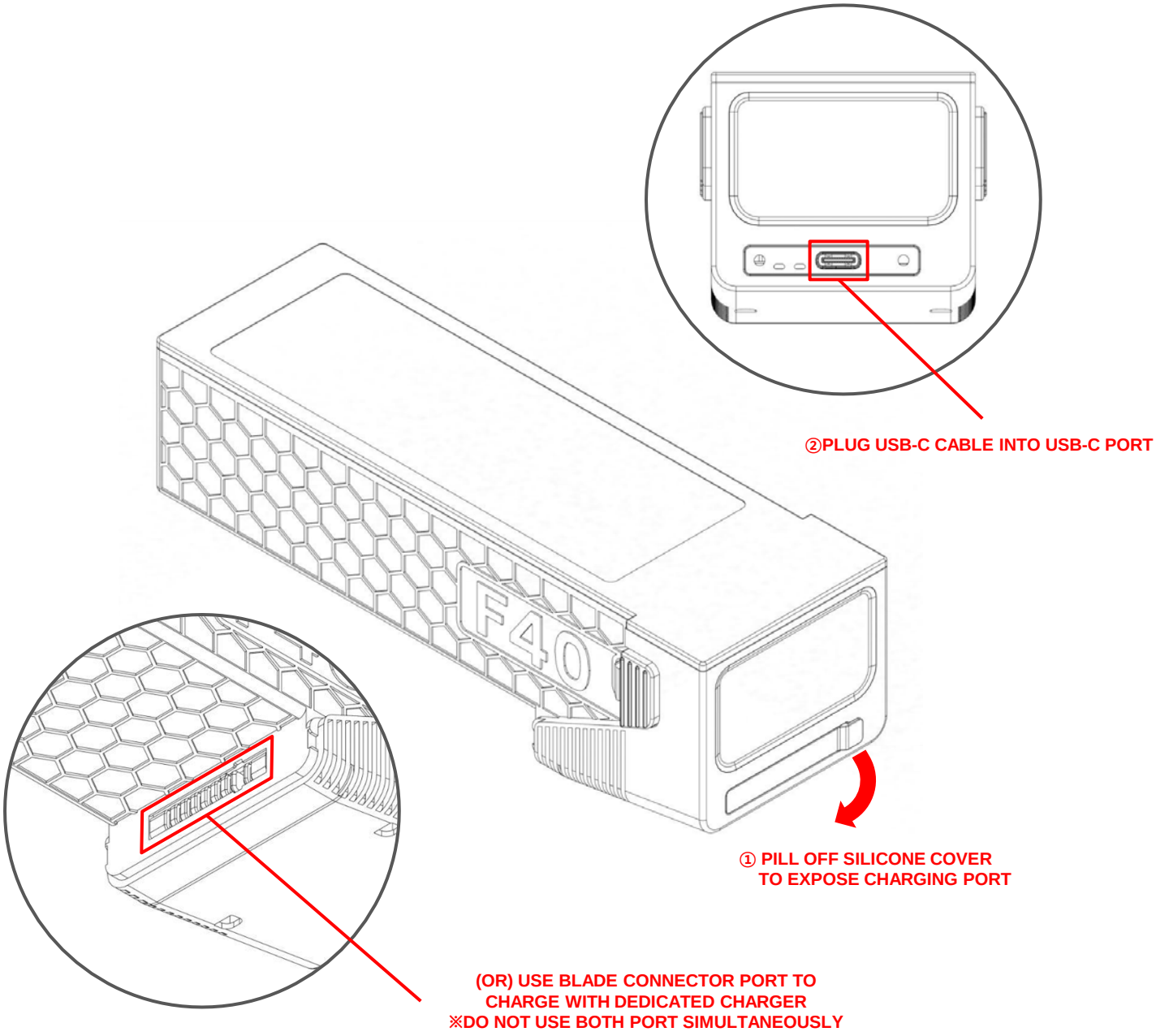

5. Landing strut installation

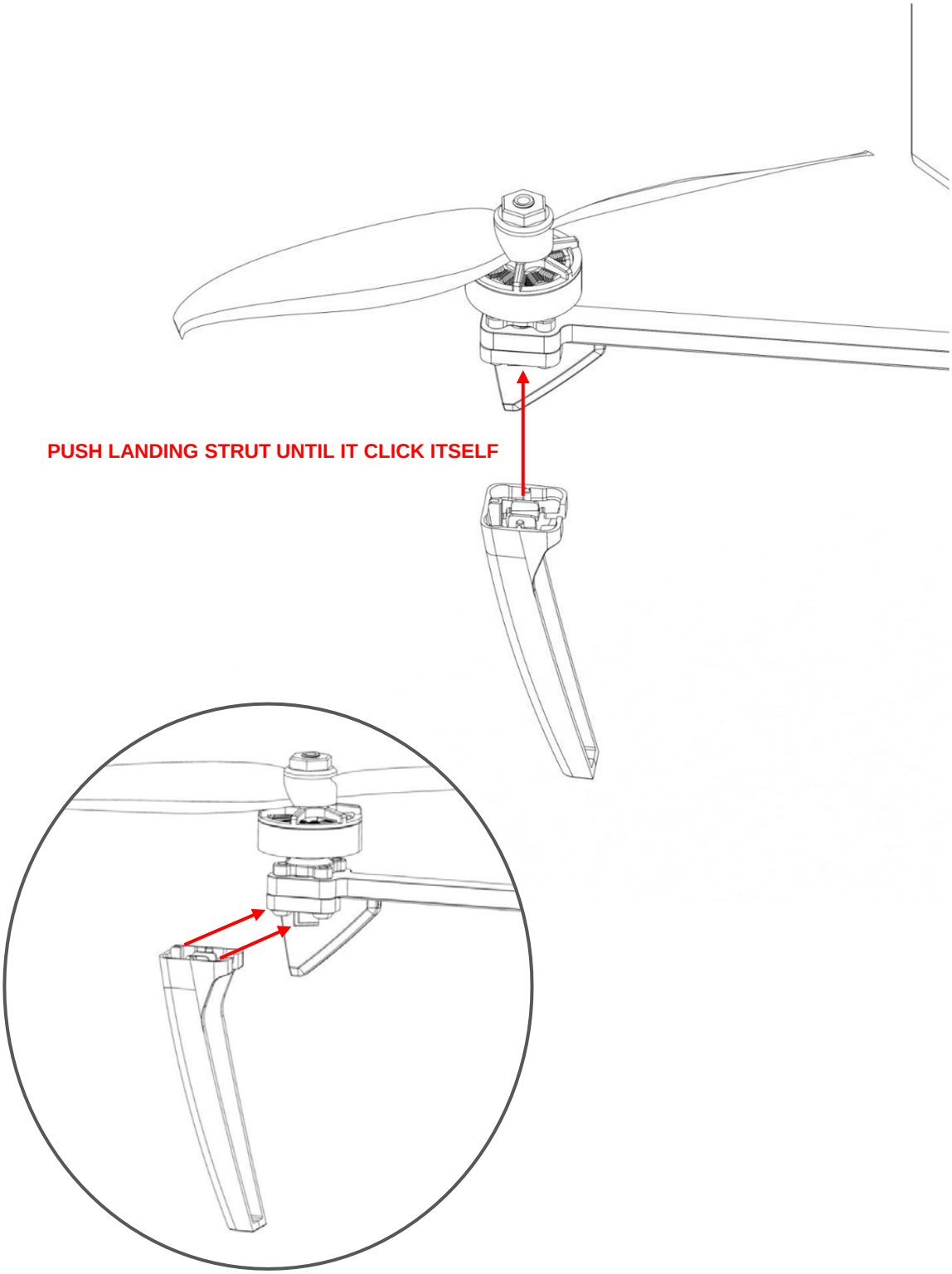

6. Battery

- Battery operation
  - The battery operation temperature between -10°C to 40°C
  - For long-term storage, keep the temperature between 22°C and 28°C and charge the battery 40-60% recommended
  - When you store batteries long-term, do not fully discharge.
  - It is recommended to store batteries in a storage box
  - Do not overcharge and discharge the battery (damage to the battery cell)
  - Recommended to fully charge once a quarter for battery life

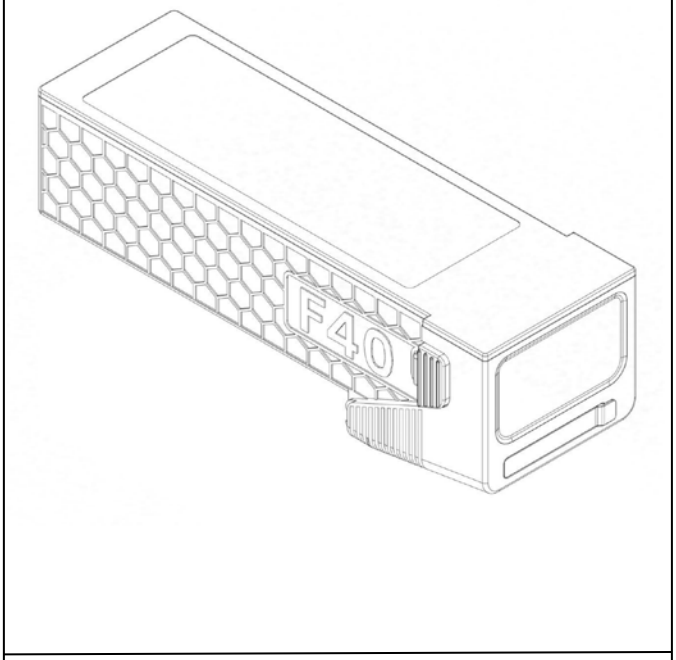

Li-po

Battery storage box

Battery Specifications

Type	Cells	mAh	Cell Voltage (Full Charge)	Voltage (Full Charge)	Weight
LiPo	4S	5200 mAh	4.2	16.8	456 g TBD

Battery **Breakage and replacement cycle**

- Battery
  - Before charging the battery, check the inflated condition of the battery case and the damaged condition of the case.
  - If the battery cell expands and the battery case is damaged, battery performance may deteriorate. Do not use it.
  - The maximum life of the battery is limited to 200 hours. Excessive discharge use can shorten the maximum life.
  - Periodically check that the voltage state of the battery is constant.
  - If the voltage per cell becomes unbalanced, it is prohibited to use it.

Pre-Flight Briefing Checklist

1. Weather briefing
2. Landowner permission obtained if required
3. NOTAM in place
4. Flight depictions to tower and verify communication frequency or phone number
5. Crew (Pilot, VO, MC) responsibility
6. Take-off/Landing distances / areas
7. FOD
8. Safety Concerns
9. Emergency Procedures
10. Mission
11. Incident checklist
    a) Assess the situation
    b) Disconnect power if safe to do so
    c) Take pictures of aircraft
    d) Get witness statements from PIC, VO, etc
    e) Notify NTSB and FAA if required

Ground Control System Setup

1. Set tripod for WIFI/LoRA and RTK antennas on the proper position.
2. Install WIFI/LoRA antennas on the tripods and communication systems.
3. Install RTK antenna on the tripod.
4. Setup laptop.
5. Power UPS AC.
6. UPS Power On.
7. Laptop Power On.
8. Power communication systems and run DSS software.
9. Check communication after WIFI/LoRA antennas booting.

Pre-Flight Physical Inspection Checklist

Item	Checklist	Item	Checklist
Propeller(s)	Check external damage	Landing Gear	Check frame damage and mounting
	Check CW, CCW mounting direction		Check attaching part for security
	Check propeller tightly fixed		Check external damage to include end caps
	Check for free rotation and unusual noises		
		Antennas	Check aircraft antennas security and damage (WIFI 2.4GHz dipole antenna, LoRA 5.8GHz coil antenna)
Motor(s)	Check external damage		Check antenna mounting direction
	Check CW, CCW mounting direction	FC / GPS	Check FMU indicate level on the ground
	Check motor tightly fixed		Check orientations when tilting and banking
	Check for debris in motor(s)		Check satellite count, HDOP, VDOP
Motor ARM	Check damage of carbon	Top Cover	Ensure wires are tucked up inside
	Check frame damage and mounting		Ensure exterior covers fix firmly
	Check frame not deformed		

Item	Checklist	Item	Checklist
Battery / Battery Compartment	Check external damage to include male / female battery connector	Mission equipment (Pyro)	Check mounting
	Check swelling of cells		Check external damage
			Check payload is properly secured inside the box and CG is correct
			Check mount for locking position

Pre-Flight Checklist

1. PAMComms : Turn on RC and Connect batteries
   a) Check RFD900x connectivity from GCS
   b) Check LTE connectivity from GCS
   c) Check PX4 connectivity from GCS
   d) Check Raspberry Pi connectivity from GCS
   If good, drone turns green.

2. GCS : Minimum of 2 bars
   a) Check telemetry connectivity on secondary monitor
   b) Check H-RTK Base Connectivity (3D Fix / Satellite ≥ 8.0 / HDOP ≤ 1.0)
   c) Check the aircraft connectivity (Red aircraft symbol appears on map)
   d) Check controller connectivity, flight modes, switch position (away from pilot)

3. Ensure RC voltage is greater than 6.3 v and antenna is straight up.

4. Check batteries fully charged and securely mounted. ≥ 49.5 v.

5. Ensure sensors are calibrated to include AHRS / Compass Check and that the proper parameter / failsafe have been set. (EPs & RTL).

6. Check mission flight plan.

7. Ensure the launch site is free of obstacles.

Reference & Technical Support

For the detail about QGC : https://docs.px4.io/master/en/
For software update about PX4 : https://github.com/PX4/PX4-Autopilot

General tech support contact : support@pabloair.com
Software tech support contact : hmkim@pabloair.com
Hardware tech support contact : jskim@pabloair.com

Abbreviations

AHRS : Altitude and Heading Reference System
ATC : Air Traffic Control
C2 : Command and Control
CCW : Counter Clockwise
CG : Center of Gravity
CW : Clockwise
FC : Flight Controller
GCS : Ground Control System
GNSS : Global Navigation Satellite System
GPS : Global Positioning System
HDOP : Horizontal Dilution of Precision
M : Meter
MTOW : Maximum Take Off Weight
Nm : Newton meters
PAMComms : PABLO AIR Mobility Communications
RF : Radio Frequency
ROI : Region of Interest
RPT : Roll Pitch Throttle
RTK : Real Time Kinematic
RTL : Return To Launch
SPI : Serial Peripheral Interface
UPS : Uninterruptible Power Supply system
V : Voltage

FCC Statement

FCC Part 15.19
This device complies with part 15 of the FCC Rules. Operation is subject to the following two conditions: (1) This device may not cause harmful interference, and (2) this device must accept any interference received, including interference that may cause undesired operation.

FCC Part 15.21
Any changes or modifications (including the antennas) to this device that are not expressly approved by the manufacturer may void the user's authority to operate the equipment.

FCC RF Radiation Exposure Statement
This equipment complies with FCC RF Radiation exposure limits set forth for an uncontrolled environment. This device and its antenna must not be co-located or operating in conjunction with any other antenna or transmitter.
This equipment should be installed and operated with a minimum distance of 20 cm between the radiator and your body.