FCC TEST REPORT
FCC ID:2BG6G-LM-LED-1500

Report No.....	:	ZHT-250530130W02
Product.....	:	Snow Machine
Trademark.....	:	/
Model(s).....	:	LM-LED-1500, LM-M-900, LM-1200, LM-M-600, LM-M-800, LM-M-1500, LM-M-1200, LM-M-1300
Model Difference.....	:	LM-LED-1500 is tested model, other models are derivative models .The models are identical in circuit, only different on the model names. So the test data of LM-LED-1500 can represent the remaining models.
Applicant.....	:	Guangdong Limin Stage Lighting Equipment Co., Ltd
Address.....	:	Building C20, wanyang Zhongchuang City, Dawang Avenue, Dawang Gaoxin District, Sihui City, Zhaoqing City, Guangdong Province
Manufacturer.....	:	Guangdong Limin Stage Lighting Equipment Co., Ltd
Address.....	:	Building C20, wanyang Zhongchuang City, Dawang Avenue, Dawang Gaoxin District, Sihui City, Zhaoqing City, Guangdong Province
Prepared by.....	:	Guangdong Zhonghan Testing Technology Co., Ltd.
Address.....	:	Room 104, Building 1, Yibaolai Industrial Park, Qiaotou Community, Fuhai Street, Bao'an District, Shenzhen, Guangdong, China
Date of Receipt.....	:	May 30, 2025
Date of Test(s).....	:	May 30, 2025 to June 10, 2025
Date of Issue.....	:	June 10, 2025
Test Standard(s).....	:	FCC CFR Title 47 Part 15 Subpart C Section 15.231 ANSI C63.10:2013
Test procedure.....		/

In the configuration tested, the EUT complied with the standards specified above.

Tested by:	Reviewed by:	Approved by:
Leon Li	Baret.Wu	
Leon Li/ Engineer	Baret Wu/ Director	Levi Lee/ Manager

Note: The results shown in this test report refer only to the sample(s) tested unless otherwise stated. This test report shall not be reproduced except in full, without prior written approval of ZHT. This document may be altered or revised by ZHT, personnel only, and shall be noted in the revision of the document.

Table of Contents **Page**

1. VERSION 3
2. SUMMARY OF TEST RESULTS 4
3. GENERAL INFORMATION 5
3.1 GENERAL DESCRIPTION OF EUT 5
3.2 DESCRIPTION OF TEST MODES 6
3.3 BLOCK DIGRAM SHOWING THE CONFIGURATION OF SYSTEM TESTED 6
3.4 DESCRIPTION OF SUPPORT UNITS(CONDUCTED MODE) 6
4. MTEST FACILITY AND TEST INSTRUMENT USED 7
4.1 TEST FACILITY 7
4.2 INSTRUMENT LIST FOR ALL TEST ITEMS 7
4.3 TESTING SOFTWARE 7
4.4 MEASUREMENT UNCERTAINTY 9
5. EMC EMISSION TEST 10
5.1 CONDUCTED EMISSION MEASUREMENT 10
5.2 RADIATED EMISSION MEASUREMENT 12
6. BANDWIDTH TEST 19
6.1 APPLIED PROCEDURES / LIMIT 19
6.2 TEST PROCEDURE 19
6.3 DEVIATION FROM STANDARD 19
6.4 TEST SETUP 19
5.5 EUT OPERATION CONDITIONS 19
6.6 TEST RESULTS 20
7. CALCULATION OF AVERAGE FACTOR 21
8. DWELL TIME 23
8.1 APPLICABLE STANDARD 23
8.2 TEST PROCEDURE 23
8.3 DEVIATION FROM STANDARD 23
8.5 EUT OPERATION CONDITIONS 23
8.6 TEST RESULTS 24
9. ANTENNA REQUIREMENT 25
10. TEST SETUP PHOTO 26
11. EUT CONSTRUCTIONAL DETAILS 26

1. VERSION

Report No.	Version	Description	Approved
ZHT-250530130W02	Rev.01	Initial issue of report	June 10, 2025

2. SUMMARY OF TEST RESULTS

Test procedures according to the technical standards:

FCC Part15 (15.231) , Subpart C			
Standard Section	Test Item	Judgment	Remark
15.207	Conducted Emission	N/A	
15.209,15.231b	Fundamental &Radiated Spurious Emission Measurement	PASS	
15.231c	Occupy Bandwidth	PASS	
15.231a	Dwell time	PASS	
15.203	Antenna Requirement	PASS	

NOTE:

(1)" N/A" denotes test is not applicable in this Test Report

3. GENERAL INFORMATION

3.1 GENERAL DESCRIPTION OF EUT

Equipment	Snow Machine
Test Model Name	LM-LED-1500
Hardware version	V1.0
Software version	V1.0
Operation Frequency:	433.8MHz
Modulation Type:	ASK
Antenna Type:	PCB antenna
Antenna Gain:	0dBi
Ratings:	Input: DC 3 V button battery powered
Sample Number:	250530130YP001
Remark:The antenna gain is provided by the customer, if the data provided by the customer is not accurate, Guangdong Zhonghan Testing Technology Co., Ltd. does not assume any responsibility.	

3.2 DESCRIPTION OF TEST MODES

For All Emission	
Final Test Mode	Description
Transmitting mode	Keep the EUT in continuously transmitting mode

Note:

(1) Fully-charged battery is used during the test

3.3 BLOCK DIGRAM SHOWING THE CONFIGURATION OF SYSTEM TESTED

RE Spurious emissions

E-1
EUT

3.4 DESCRIPTION OF SUPPORT UNITS(CONDUCTED MODE)

The EUT has been tested as an independent unit together with other necessary accessories or support units. The following support units or accessories were used to form a representative test configuration during the tests.

Item	Equipment	Mfr/Brand	Model/Type No.	Series No.	Note

Item	Shielded Type	Ferrite Core	Length	Note

Note:

(1) The support equipment was authorized by Declaration of Confirmation.
(2) For detachable type I/O cable should be specified the length in cm in『Length』column.
(3) “YES” is means “shielded” “with core”; “NO” is means “unshielded” “without core”.

4. MTEST FACILITY AND TEST INSTRUMENT USED

4.1 TEST FACILITY

Guangdong Zhonghan Testing Technology Co., Ltd.
Add.: Room 104, Building 1, Yibaolai Industrial Park, Qiaotou Community, Fuhai Street, Bao'an District, Shenzhen, People's Republic of China

FCC Registration Number:255941
Designation Number: CN0325
IC Registered No.: 29832
CAB identifier: CN0143

4.2 INSTRUMENT LIST FOR ALL TEST ITEMS

Radiation Test equipment

Item	Equipment	Manufacturer	Model	Serial No.	Last Cal.	Next Cal.
1	Receiver	R&S	ESCI	100874	May 6, 2025	May 5, 2026
2	Loop Antenna	TESEQ	HLA6121	58357	Oct. 11, 2024	Oct. 10, 2025
3	Amplifier	Schwarzbeck	BBV 9743 B	00378	May 6, 2025	May 5, 2026
4	Amplifier	Schwarzbeck	BBV 9718 B	00040	May 7, 2025	May 6, 2026
5	Bilog Antenna	Schwarzbeck	VULB9162	00498	May 15, 2025	May 14, 2026
6	Horn Antenna	Schwarzbeck	BBHA9120D	02623	May 15, 2025	May 14, 2026
7	Horn Antenna	A.H.SYSTEMS	SAS574	588	Oct. 21, 2024	Oct. 20, 2025
8	Amplifier	AEROFLEX	100KHz-40GHz	097	Oct. 21, 2024	Oct. 20, 2025
9	Spectrum Analyzer	R&S	FSV40	101413	Oct. 21, 2024	Oct. 20, 2025
10	Spectrum Analyzer	KEYSIGHT	N9020A	MY53420208	May 7, 2025	May 6, 2026
11	WIDBAND RADIO COMMUNICATION TESTER	R&S	CMW500	109863	May 7, 2025	May 6, 2026
12	Single Generator	Agilent	N5182A	MY48180575	May 7, 2025	May 6, 2026
13	Power Sensor	MWRFtest	MW100-RFCB	/	May 7, 2025	May 6, 2026
14	CABLE	EMToni	DA800-NM-NM-11000MM	/	May 6, 2025	May 5, 2026

Conduction Test equipment

Equipment	Manufacturer	Model	Serial No.	Last Cal.	Next Cal.
Receiver	R&S	ESCI	100874	May 6, 2025	May 5, 2026
LISN	R&S	ENV216	102794	May 6, 2025	May 5, 2026
ISN CAT 6	Schwarzbeck	NTFM 8158	00318	May 7, 2025	May 6, 2026
ISN CAT 5	Schwarzbeck	CAT5 8158	00343	May 7, 2025	May 6, 2026
Capacitive Voltage Probe	Schwarzbeck	CVP 9222 C	00101	May 8, 2025	May 7, 2026
Current Transformer Clamp	Schwarzbeck	SW 9605	SW9605 #209	May 8, 2025	May 7, 2026
CABLE	EMToni	G223-NM-BNCM -2000MM	/	May 7, 2025	May 6, 2026

Conducted Test equipment

Item	Equipment	Manufacturer	Model	Serial No.	Last Cal.	Next Cal.
1	Spectrum Analyzer	R&S	FSV40	101413	Oct. 21, 2024	Oct. 20, 2025
2	Spectrum Analyzer	KEYSIGHT	N9020A	MY53420208	May 7, 2025	May 6, 2026
3	Power Sensor	MWRFtest	MW100-RFCB	/	May 7, 2025	May 6, 2026

4.3 Testing software

Project	Software name	Edition
Radiated Emission	EZ-EMC	FA-03A2 RE+
RF Test	MTS 8310	2.0.0.0

4.4 MEASUREMENT UNCERTAINTY

The reported uncertainty of measurement y ± U，where expended uncertainty U is based on a standard uncertainty multiplied by a coverage factor of k=2，providing a level of confidence of approximately 95 %。

No.	Item	Uncertainty
1	Conducted Emission Test	±1.38dB
2	RF conducted power	±0.16dB
3	Spurious emissions conducted	±0.21dB
4	All radiated emissions (9k-30MHz)	±4.68dB
5	All radiated emissions (<1G)	±4.68dB
6	All radiated emissions (>1G)	±4.89dB
7	Temperature	±0.5°C
8	Humidity	±2%
9	Occupied Bandwidth	±4.96%

Decision Rule

☒ Uncertainty is not included

☐ Uncertainty is included

5. EMC EMISSION TEST

5.1 CONDUCTED EMISSION MEASUREMENT

Test Requirement:	FCC Part15 C Section 15.207
Test Method:	ANSI C63.10:2013
Test Frequency Range:	150KHz to 30MHz
Receiver setup:	RBW=9KHz, VBW=30KHz, Sweep time=auto

5.1.1 POWER LINE CONDUCTED EMISSION LIMITS

(Frequency Range 150KHz-30MHz)

FREQUNCY (MHz)	Limit (dBuV)		Standard
	Quasi-peak	Average	
0.15 -0.5	66 - 56 *	56 - 46 *	FCC
0.50 -5.0	56.00	46.00	FCC
5.0 -30.0	60.00	50.00	FCC

Note:

(1) The tighter limit applies at the band edges.

(2) The limit of " * " marked band means the limitation decreases linearly with the logarithm of the frequency in the range.

The following table is the setting of the receiver

Receiver Parameters	Setting
Attenuation	10 dB
Start Frequency	0.15 MHz
Stop Frequency	30 MHz
IF Bandwidth	9 kHz

5.1.2 TEST PROCEDURE

a. The EUT was placed 0.8 meters from the horizontal ground plane with EUT being connected to the power mains through a line impedance stabilization network (LISN). All other support equipments powered from additional LISN(s). The LISN provide 50 Ohm/ 50uH of coupling impedance for the measuring instrument.
b. Interconnecting cables that hang closer than 40 cm to the ground plane shall be folded back and forth in the center forming a bundle 30 to 40 cm long.
c. I/O cables that are not connected to a peripheral shall be bundled in the center. The end of the cable may be terminated, if required, using the correct terminating impedance. The overall length shall not exceed 1 m.
d. LISN at least 80 cm from nearest part of EUT chassis.
e. For the actual test configuration, please refer to the related Item –EUT Test Photos.

4.1.3 DEVIATION FROM TEST STANDARD

No deviation

5.1.4 TEST SETUP

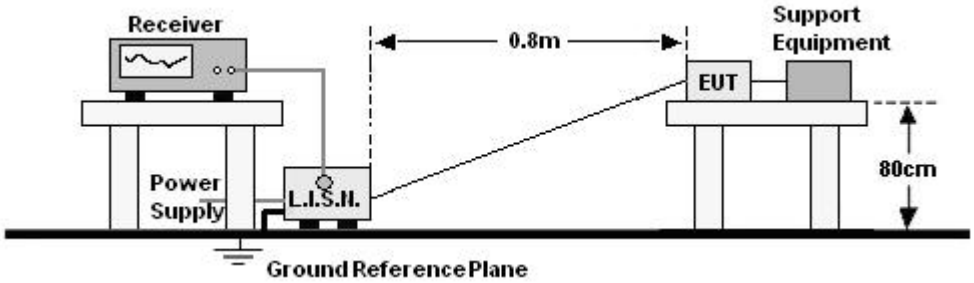

5.1.5 EUT OPERATING CONDITIONS

The EUT was configured for testing in a typical fashion (as a customer would normally use it). The EUT has been programmed to continuously transmit during test. This operating condition was tested and used to collect the included data.

5.1.6 TEST RESULTS

N/A

This product is only powered by button batteries and the testing items are not applicable

5.2 RADIATED EMISSION MEASUREMENT

Test Requirement:	FCC Part15 C Section 15.209
Test Method:	ANSI C63.10:2013
Test Frequency Range:	9kHz to 25GHz
Test site:	Measurement Distance: 3m
Receiver setup:	

Frequency	Detector	RBW	VBW	Value
9KHz-150KHz	Quasi-peak	200Hz	600Hz	Quasi-peak
150KHz-30MHz	Quasi-peak	9KHz	30KHz	Quasi-peak
30MHz-1GHz	Quasi-peak	100KHz	300KHz	Quasi-peak
Above 1GHz	Peak	1MHz	3MHz	Peak
	Peak	1MHz	10Hz	Average

5.2.1 RADIATED EMISSION LIMITS

20dBc in any 100 kHz bandwidth outside the operating frequency band. In case the emission fall within the restricted band specified on 15.205(a), then the 15.231(b) limit in the table below has to be followed.

Frequencies(MHz)	Field Strength(micorvolts/meter)	Measurement Distance(meters)
0.009~0.490	2400/F(KHz)	300
0.490~1.705	24000/F(KHz)	30
1.705~30.0	30	30
30~88	100	3
88~216	150	3
216~960	200	3
Above 960	500	3

LIMITS OF RADIATED EMISSION MEASUREMENT

FREQUENCY (MHz)	Limit (dBuV/m) (at 3M)	
	PEAK	AVERAGE
Above 1000	74	54

Notes:

(1) The limit for radiated test was performed according to FCC PART 15C.

(2) The tighter limit applies at the band edges.

(3) Emission level (dBuV/m)=20log Emission level (uV/m).

FUNDAMENTAL AND HARMONICS EMISSION LIMITS

Fundamental Frequency (MHz)	Field Strength of Fundamental (microvolts/meter)	Field Strength of Spurious Emissions (microvolts/meter)
40.66 - 40.70	2,250	225
70 - 130	1,250	125
130 - 174	1,250 to 3,750 **	125 to 375 **
174 - 260	3,750	375
260 - 470	3,750 to 12,500 **	375 to 1,250 **
Above 470	12,500	1,250

** linear interpolations

[Where F is the frequency in MHz, the formulas for calculating the maximum permitted fundamental field strengths are as follows: for the band 130-174 MHz, μV/m at 3 meters = 56.81818(F) - 6136.3636; for the band 260-470 MHz, μV/m at 3 meters = 41.6667(F) - 7083.3333. The maximum permitted unwanted emission level is 20 dB below the maximum permitted fundamental level.]

FREQUENCY RANGE OF RADIATED MEASUREMENT (For unintentional radiators)

Highest frequency generated or Upper frequency of measurement used in the device or on which the device operates or tunes (MHz)	Range (MHz)
Below 1.705	30
1.705 – 108	1000
108 – 500	2000
500 – 1000	5000
Above 1000	5th harmonic of the highest frequency or 40 GHz, whichever is lower

Spectrum Parameter	Setting
Attenuation	Auto
Start Frequency	1000 MHz
Stop Frequency	10th carrier harmonic
RBW / VBW setting	1 MHz / 1 MHz for Peak, 1 MHz / 10Hz for Average

Receiver Parameter	Setting
Attenuation	Auto
Start ~ Stop Frequency	9kHz~150kHz / RB 200Hz for QP
Start ~ Stop Frequency	150kHz~30MHz / RB 9kHz for QP
Start ~ Stop Frequency	30MHz~1000MHz / RB 120kHz for QP

5.2.2 TEST PROCEDURE

a. The measuring distance of at 3 m shall be used for measurements at frequency up to 1GHz. For frequencies above 1GHz, any suitable measuring distance may be used.
b. The EUT was placed on the top of a rotating table 0.8 meters above the ground at a 3 meter open area test site. The table was rotated 360 degrees to determine the position of the highest radiation.
c. The height of the equipment or of the substitution antenna shall be 0.8 m; above 1GHz, the height was 1.5m, the height of the test antenna shall vary between 1 m to 4 m. Both horizontal and vertical polarizations of the antenna are set to make the measurement.

d. The initial step in collecting conducted emission data is a spectrum analyzer peak detector mode pre-scanning the measurement frequency range. Significant peaks are then marked and then Quasi Peak detector mode re-measured.
e. If the Peak Mode measured value compliance with and lower than Quasi Peak Mode Limit, the EUT shall be deemed to meet QP Limits and then no additional QP Mode measurement performed.
f. For the actual test configuration, please refer to the related Item –EUT Test Photos.

Note:

Both horizontal and vertical antenna polarities were tested
and performed pretest to three orthogonal axis. The worst case was X axis and the emissions were reported

5.2.3 TEST SETUP

（A）Radiated Emission Test-Up Frequency Below 30MHz

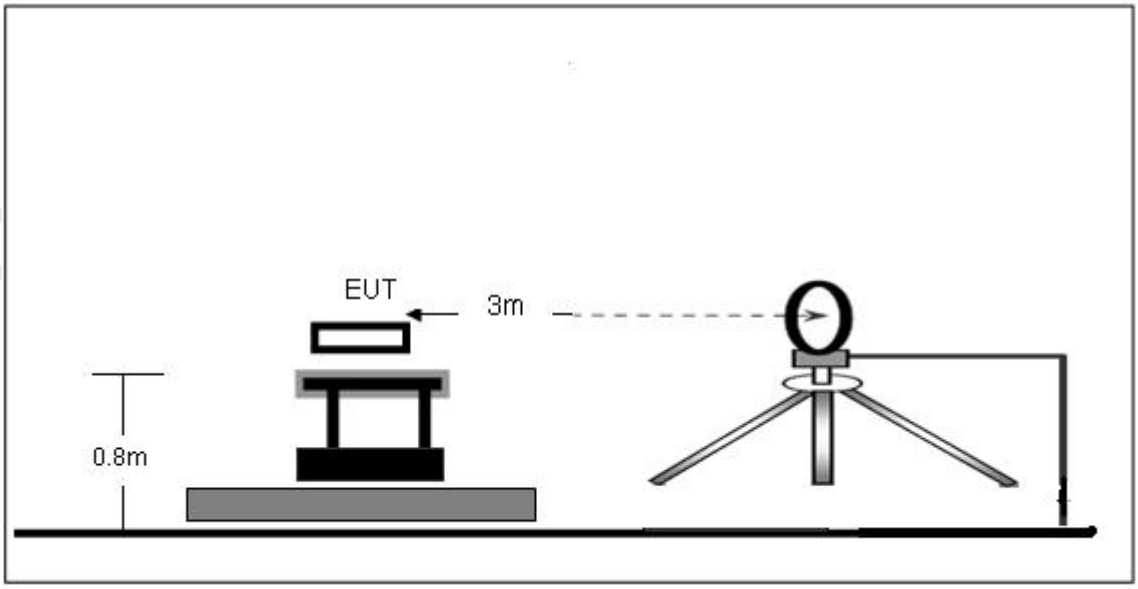

（B）Radiated Emission Test-Up Frequency 30MHz~1GHz

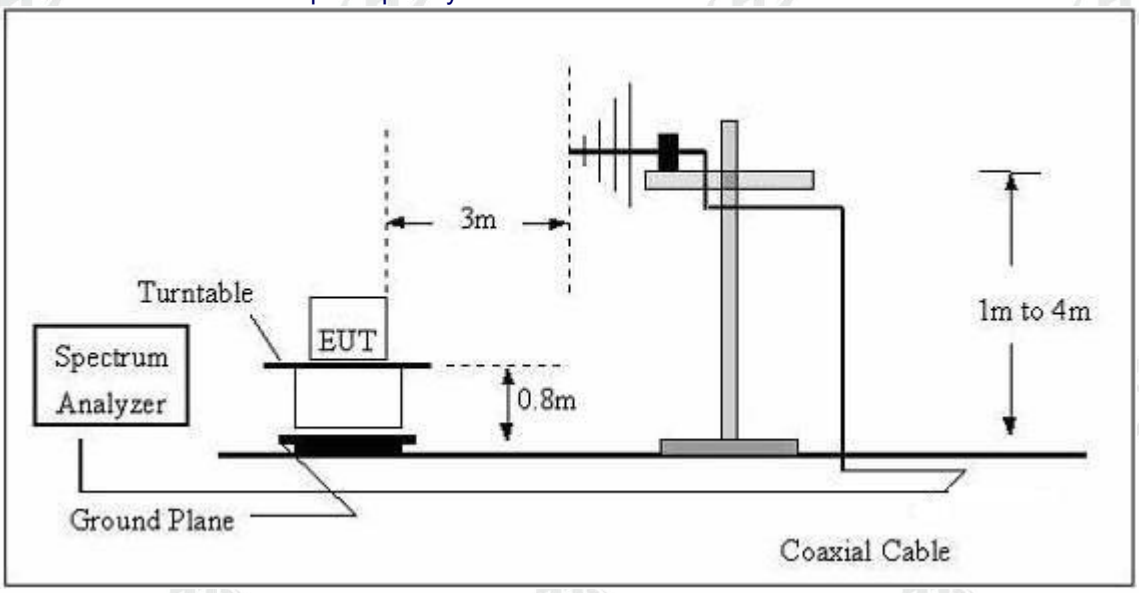

（C）Radiated Emission Test-Up Frequency Above 1GHz

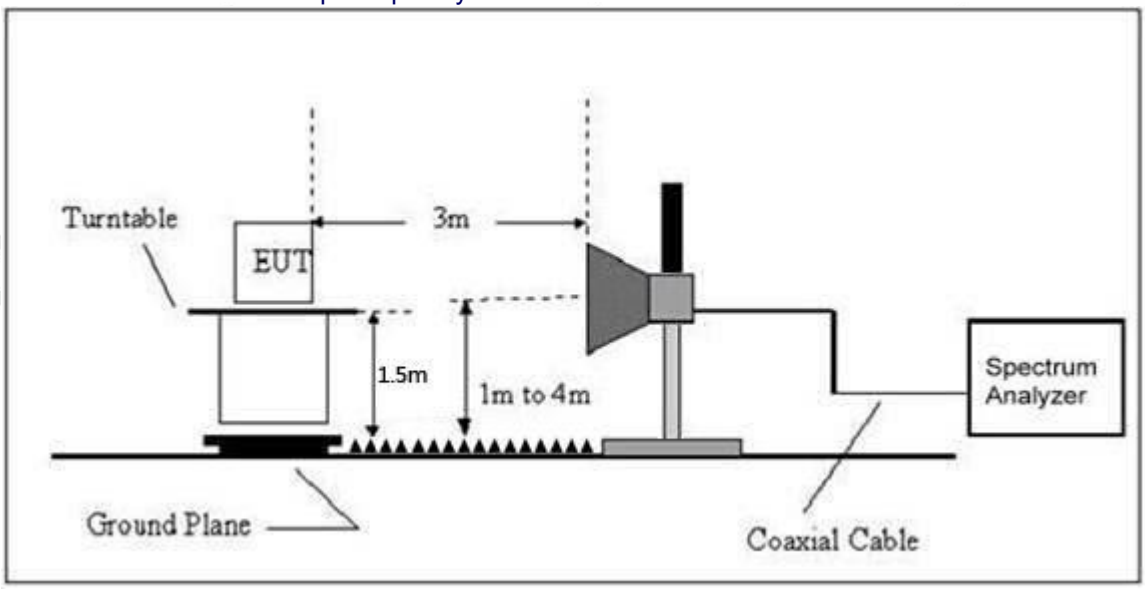

5.2.4 EUT OPERATING CONDITIONS

The EUT tested system was configured as the statements of 2.4 Unless otherwise a special operating condition is specified in the follows during the testing.

5.2.5 TEST RESULTS

Radiated Spurious Emission (Below 9KHz – 30MHz)

NOTE:
The amplitude of spurious emissions which are attenuated by more than 20dB below the permissible value has no need to be reported.
Distance extrapolation factor =40 log (specific distance/test distance)(dB);
Limit line = specific limits(dBuv) + distance extrapolation factor.

Radiated Spurious Emission (Between 30MHz – 1GHz)

Temperature :	24.2℃	Relative Humidity :	53.5%
Pressure :	101 kPa	Polarization :	Horizontal
Test Voltage :	DC 3V		
Test Mode :	433 mode		

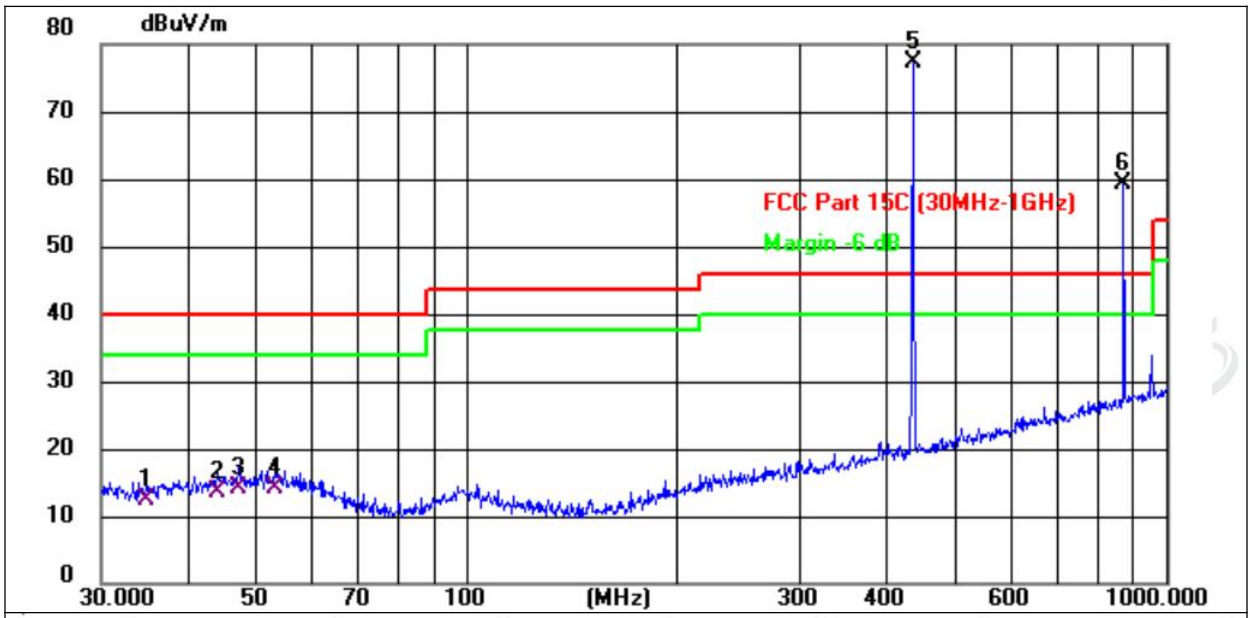

No.	Frequency (MHz)	Reading (dBuV)	Factor (dB/m)	Level (dBuV/m)	Limit (dBuV/m)	Margin (dB)	Detector
1	34.8821	23.42	-10.86	12.56	40.00	-27.44	QP
2	44.1200	23.36	-9.78	13.58	40.00	-26.42	QP
3	47.1597	23.66	-9.51	14.15	40.00	-25.85	QP
4	53.1313	23.76	-9.68	14.08	40.00	-25.92	QP
5 *	433.8000	82.55	-5.34	77.21	100.83	-23.62	peak
6 X	867.6300	57.25	1.90	59.15	80.83	-21.68	peak

Remarks:
1.Final Level =Receiver Read level + Antenna Factor + Cable Loss – Preamplifier Factor
2.The emission levels of other frequencies are very lower than the limit and not show in test report.

No.	Frequency (MHz)	Reading (dBuV)	Factor (dB)	Results (dBuV/m)	Limit (dBuV/m)	Margin (dB)	Detector
1	433.8	82.55	-5.34	77.21	100.83	-23.62	PK
2	433.8	/	-7.13	70.08	80.83	-10.75	AV
3	867.6	57.25	1.90	59.15	80.83	-21.68	PK
4	867.6	/	-7.13	52.02	60.83	-8.81	AV

Temperature :	24.2℃	Relative Humidity :	53.5%
Pressure :	101 kPa	Polarization :	Vertical
Test Voltage :	DC 3V		
Test Mode :	433 mode		

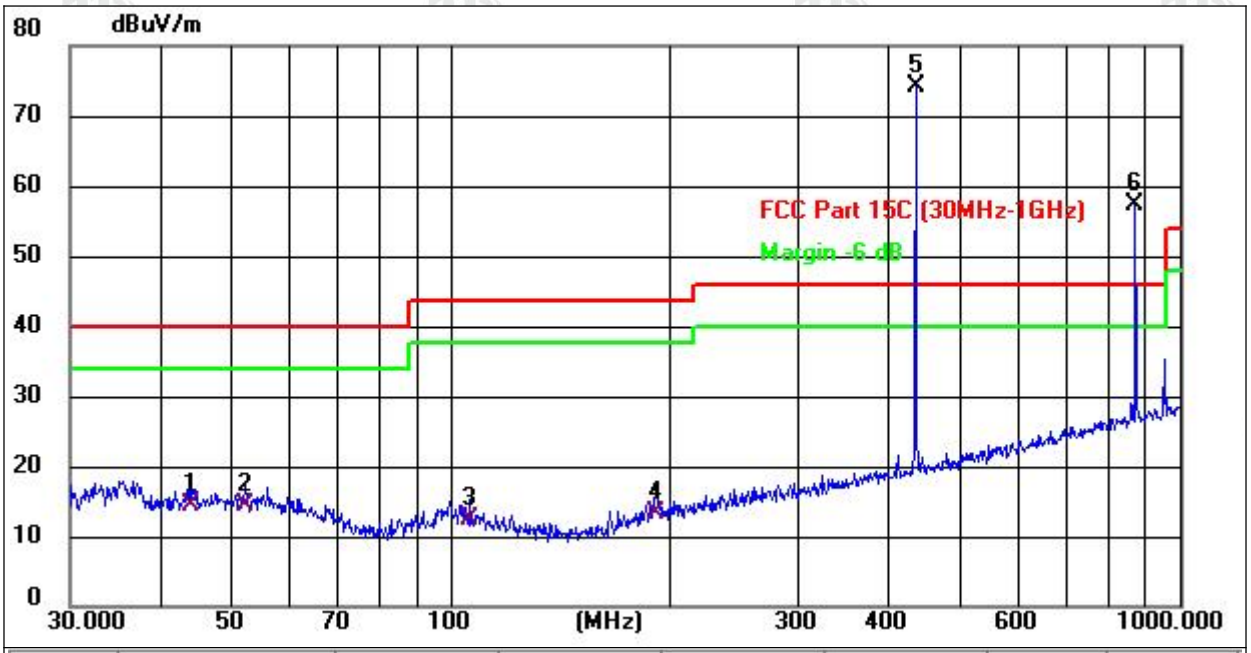

No.	Frequency (MHz)	Reading (dBuV)	Factor (dB/m)	Level (dBuV/m)	Limit (dBuV/m)	Margin (dB)	Detector
1	44.1200	24.16	-9.78	14.38	40.00	-25.62	QP
2	52.2077	23.94	-9.55	14.39	40.00	-25.61	QP
3	106.3850	24.14	-11.78	12.36	43.50	-31.14	QP
4	191.0738	25.15	-11.75	13.40	43.50	-30.10	QP
5 *	433.8000	79.60	-5.34	74.26	100.83	-26.57	peak
6 X	867.6000	55.28	1.90	57.18	80.83	-23.65	peak

Remarks:
1.Final Level =Receiver Read level + Antenna Factor + Cable Loss – Preamplifier Factor
2.The emission levels of other frequencies are very lower than the limit and not show in test report.

No.	Frequency (MHz)	Reading (dBuV)	Factor (dB)	Results (dBuV/m)	Limit (dBuV/m)	Margin (dB)	Detector
1	433.8	79.60	-5.34	74.26	100.83	-26.57	PK
2	433.8	/	-7.13	67.13	80.83	-13.70	AV
3	867.6	55.28	1.90	57.18	80.83	-23.65	PK
4	867.6	/	-7.13	50.05	60.83	-10.78	AV

Radiated Spurious Emission (1GHz to 10th harmonics)

Frequency MHz	Peak Level dBuV/m	Duty cycle factor	Average Level dBuV/m	Limit		Margin dB		Polarization
				PK	AV	PK	AV	
1301.76	50.6	-7.13	43.47	74	54	-23.4	-10.53	H
1739.68	41.58	-7.13	34.45	80.8	60.8	-39.22	-26.35	H
2179.6	58.12	-7.13	50.99	80.8	60.8	-22.68	-9.81	H
2184.6	43.74	-7.13	36.61	80.8	60.8	-37.06	-24.19	H
3065.44	45.35	-7.13	38.22	74	54	-28.65	-15.78	H
1301.76	41.44	-7.13	34.31	74	54	-32.56	-19.69	V
1739.68	55.36	-7.13	48.23	80.8	60.8	-25.44	-12.57	V
2179.6	41.96	-7.13	34.83	80.8	60.8	-38.84	-25.97	V
2184.6	41.85	-7.13	34.72	80.8	60.8	-38.95	-26.08	V
3065.44	45.13	-7.13	38	74	54	-28.87	-16	V

Notes: 1.Average emission Level = Peak Level + Duty cycle factor

2.Duty cycle level please see clause 6.

6. BANDWIDTH TEST

6.1 APPLIED PROCEDURES / LIMIT

According to FCC 15.231(c) requirement:

The bandwidth of the emission shall be no wider than 0.25% of the center frequency for devices operating between 70 MHz to 900 MHz. Those devices operating above 900 MHz, the emission spurious shall be no wider than 0.5% of the center frequency. Bandwidth is determined at the points 20 dB down from the modulated carrier.

B.W (20dBc) Limit = 0.25% * f(MHz) = 0.25% * 433.8MHz = 1.0848MHz

Spectrum Parameter	Setting
Attenuation	Auto
Span Frequency	> Measurement Bandwidth or Channel Separation
RB	100Hz for 1% to 5% of the OBW
VB	≥3*RBW
Detector	Peak
Trace	Max Hold
Sweep Time	Auto

6.2 TEST PROCEDURE

a. The EUT was directly connected to the spectrum analyzer and antenna output port as show in the block diagram below,
b. Spectrum Setting : RBW= 100KHz, VBW≥ 3*RBW, Sweep time = Auto.

6.3 DEVIATION FROM STANDARD

No deviation.

6.4 TEST SETUP

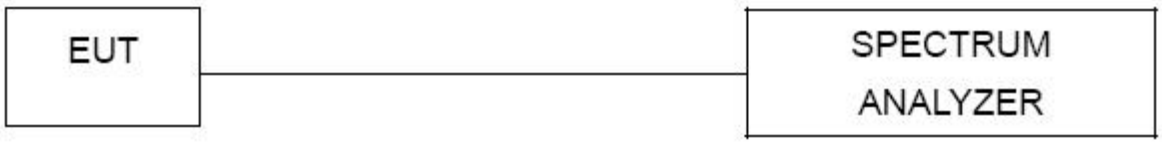

5.5 EUT OPERATION CONDITIONS

The EUT tested system was configured as the statements of 2.4 Unless otherwise a special operating condition is specified in the follows during the testing.

6.6 TEST RESULTS

Temperature :	25.1 ℃	Relative Humidity :	55%
Pressure :	101kPa	Test Voltage :	DC 3V
Test Mode :	433 mode		

Frequency	20dB Bandwidth (kHz)	Limit (MHz)	Result
433.8MHz	5.119	1.0845	PASS

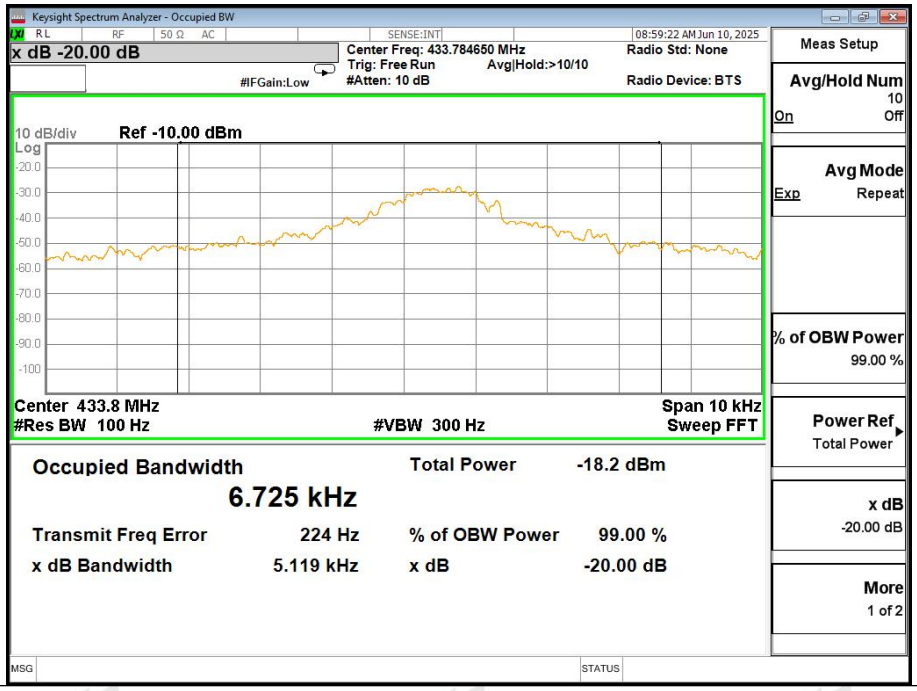

7. CALCULATION OF AVERAGE FACTOR

The output field strengths of specification in accordance with the FCC rules specify measurements with an average detector. During the test, a spectrum analyzer incorporating a peak detector was used. Therefore, a reduction factor can be applied to the resultant peak signal level and compared to the limit for measurement instrumentation incorporating an average detector.

The duty cycle is measured by placing the spectrum analyzer to set zero span at 0.1MHz resolution bandwidth.

Averaging factor in dB =20log (duty cycle)

Duty Cycle = (1.1ms*19+0.4ms*6)/53.2ms=0.44

Therefore, the averaging factor is found by 20log0.44= -7.13dB

Test plot as follows:

Note: aperiodic.

Cycle

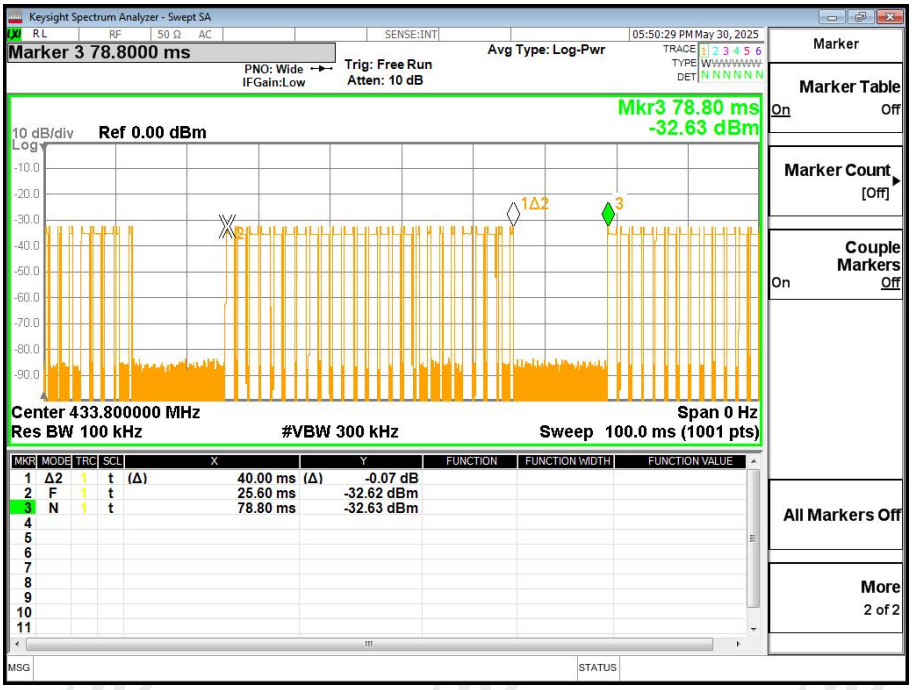

8. DWELL TIME

8.1 APPLICABLE STANDARD

According to FCC 15.231(a) requirement:

A manually operated transmitter shall employ a switch that will automatically deactivate the transmitter within not more than 5 seconds of being released.

8.2 TEST PROCEDURE

Check the calibration of the measuring instrument using either an internal calibrator or a known signal from an external generator.

1.Position the EUT without connection to measurement instrument. Turn on the EUT and connect its antenna terminal to measurement instrument via a low loss cable. Then set it to any one measured frequency within its operating range, and make sure the instrument is operated in its linear range.

2.Set RBW to 100KHz and VBW of spectrum analyzer to 300KHz with a convenient frequency span including 100 kHz bandwidth from band edge.

3.Measure the highest amplitude appearing on spectral display and set it as a reference level. Plot the graph with marking the highest point and edge frequency.

4.Repeat above procedures until all measured frequencies were complete.

8.3 DEVIATION FROM STANDARD

No deviation.

8.4 TEST SETUP

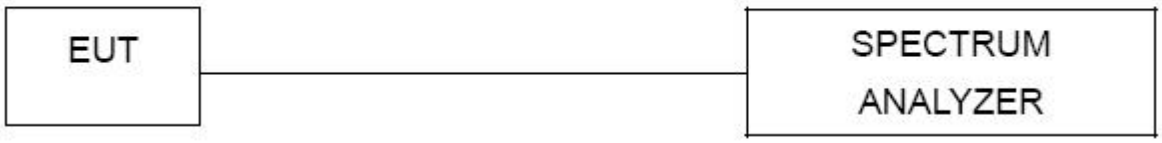

8.5 EUT OPERATION CONDITIONS

The EUT tested system was configured as the statements of 2.4 Unless otherwise a special operating condition is specified in the follows during the testing.

8.6 TEST RESULTS

Dwell time (second)	Limit (second)	Result
0.3s	<5s	Pass

Test plot as follows:

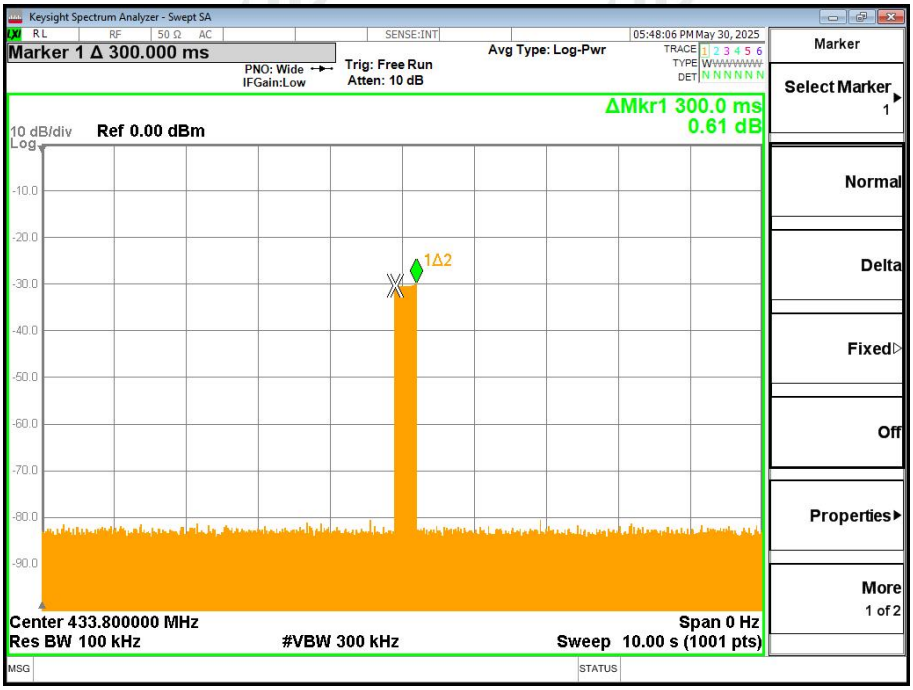

9. ANTENNA REQUIREMENT

Standard requirement:	FCC Part15 C Section 15.203
15.203 requirement: An intentional radiator shall be designed to ensure that no antenna other than that furnished by the responsible party shall be used with the device. The use of a permanently attached antenna or of an antenna that uses a unique coupling to the intentional radiator, the manufacturer may design the unit so that a broken antenna can be replaced by the user, but the use of a standard antenna jack or electrical connector is prohibited.	
EUT Antenna:	
The antenna is PCB antenna, the best case gain of the antennas are 0dBi, reference to the appendix II for details	

10. TEST SETUP PHOTO

Reference to the appendix I for details.

11. EUT CONSTRUCTIONAL DETAILS

Reference to the appendix II for details.

※※※※※ **END OF REPORT** ※※※※※