TEST REPORT

Applicant: **Address:**	**Shenzhen K18 Technology Co.,Ltd** **401, No. 2, Lane 9, Lingxia garden, Xin'an street, Bao'an District, Shenzhen, China**		
Manufacturer: **Address:**	**Shenzhen K18 Technology Co.,Ltd** **401, No. 2, Lane 9, Lingxia garden, Xin'an street, Bao'an District, Shenzhen, China**		
Factory: **Address:**	**Shenzhen K18 Technology Co.,Ltd** **401, No. 2, Lane 9, Lingxia garden, Xin'an street, Bao'an District, Shenzhen, China**		
E.U.T.:	**Wireless Gaming Mouse**		
Model Number:	**Zephyr, KM02, KM03,KM04, KM05, KM06,KM09,KM10, KM13,KM18, KM19, KM21, KM22, KM29, KM34, KM35, KM37, KM39, KM46, KM49, OM005, OM006, OM007**		
Trade mark:	**--**		
FCC ID:	**2BG6X-ZEPHYR**		
Date of Receipt:	**June 4, 2024**	**Date of Test:**	**June 4 - 18, 2024**
Test Specification:	**FCC 47 CFR Part 15, Subpart C**		
Test Result:	**The equipment under test was found to be compliance with the requirements of the standards applied.**		

Prepared by:

Jerry Hu/ Engineer

Approved & Authorized Signer:

Frank Shen/ Manager

Issue Date: July 5, 2024

This test report is based on a single evaluation of one sample of above mentioned products. It is not permitted to be duplicated in extracts without written approval of Dongguan Lepont Service Co., Ltd.

TABLE OF CONTENTS

1. GENERAL PRODUCT INFORMATION 4
1.1. PRODUCT FUNCTION 4
1.2. EUT TECHNICAL DESCRIPTION 4
1.3. INDEPENDENT OPERATION MODES 5
1.4. TEST SOFTWARE 5
1.5. GENERAL CONDITION 5
1.6. SUPPORT EQUIPMENT 6
2. TEST STANDARDS AND SITES 7
2.1. DESCRIPTION OF STANDARDS AND RESULTS 7
2.2. LIST OF TEST AND MEASUREMENT INSTRUMENTS 8
2.3. MEASUREMENT UNCERTAINTY 9
2.4. TEST FACILITY 9
3. SETUP OF EQUIPMENT UNDER TEST 10
3.1. RADIO FREQUENCY TEST SETUP 1 10
3.2. RADIO FREQUENCY TEST SETUP 2 10
3.3. CONDUCTED EMISSION TEST SETUP 12
3.4. BLOCK DIAGRAM CONFIGURATION OF TEST SYSTEM 12
4. TEST RESULTS AND MEASUREMENT DATA 13
4.1. DTS 6DB BANDWIDTH TEST 13
4.2. MAXIMUM PEAK CONDUCTED OUTPUT POWER 17
4.3. MAXIMUM POWER SPECTRAL DENSITY 19
4.4. UNWANTED EMISSIONS IN NON-RESTRICTED FREQUENCY BANDS 22
4.5. RADIATED SPURIOUS EMISSION 29
4.6. CONDUCTED EMISSION TEST 40
4.7. ANTENNA APPLICATION 43

Revision History of This Test Report		
Report Number	Description	Issued Date
LP24050046C01-04	Initial Issue	2024-7-5

1. GENERAL PRODUCT INFORMATION

1.1. PRODUCT FUNCTION

Refer to Technical Construction Form and User Manual.

1.2. EUT TECHNICAL DESCRIPTION

Product Name:	Mouse
Model No.:	Zephyr, KM02, KM03,KM04, KM05, KM06,KM09,KM10, KM13,KM18, KM19, KM21, KM22, KM29, KM34, KM35,KM37 KM39, KM46, KM49, OM005, OM006, OM007
Test Model No:	Zephyr
Difference:	All models of the circuit principle, PCB layout, modules are the same, only the model name is different
Serial No.:	N/A
Test sample(s) ID:	LP24050046C01-S001
Sample(s) Status	Engineer sample
Hardware:	V 1.0
Software:	V 1.0
Operation Frequency:	2405MHz-2475MHz
Channel numbers:	16
Modulation type:	GFSK
Antenna Type:	PCB Antenna
Antenna gain:	-0.71 dBi
Power supply:	DC 3.7V, 300mAh,1.11Wh

1.3. INDEPENDENT OPERATION MODES

The EUT has been tested under its typical operating condition.
The EUT configuration for testing is installed on RF field strength measurement to meet the Commissions requirement and operating in a manner which intends to maximize its emission characteristics in a continuous normal application.

The Transmitter was operated in the normal operating mode. The TX frequency was fixed which was for the purpose of the measurements.

Test of channel included the lowest and middle and highest frequency to perform the test, then record on this report.

Pre-defined engineering program for regulatory testing used to control the EUT for staying in continuous transmitting and receiving mode is programmed.

Test mode	Low channel	Middle channel	High channel
GFSK(TX)	2405MHz	2445MHz	2475MHz
GFSK(RX)	2405MHz	2445MHz	2475MHz
Note: For the test results, the EUT had been tested with all conditions. But only the worst case was shown in test report except the RF output power test was shown all conditions.			

Frequency and Channel list

Channel No.	Frequency (MHz)	Channel No.	Frequency (MHz)	Channel No.	Frequency (MHz)	Channel No.	Frequency (MHz)
1	**2405**	2	2408	3	2414	4	2419
5	2422	6	2426	7	2436	8	2439
9	2441	10	**2445**	11	2453	12	2459
13	2463	14	2466	15	2471	16	**2475**

1.4. TEST SOFTWARE

Software		Description
BK32xx RF Test_V2.1.0.exe		Set the COM Port Test Tool to set the corresponding Test conditions

1.5. GENERAL CONDITION

	Temperature	Humidity
Ambient Condition:	22.4℃	51.2 %RH

1.6. SUPPORT EQUIPMENT

EUT Cable List and Details			
Cable Description	Length (m)	Shielded/Unshielded	With / Without Ferrite
/	/	/	/

Auxiliary Cable List and Details			
Cable Description	Length (m)	Shielded/Unshielded	With / Without Ferrite
/	/	/	/

Auxiliary Equipment List and Details			
Description	Manufacturer	Model	Serial Number
Laptop computer	Lenovo	Xiaoxin Pro IA5HR	PF490VB0
ADAPTER	OPPO	OP92KAUH	K520247EC1001719

Notes:

1.All the equipment/cables were placed in the worst-case configuration to maximize the emission during the test.

2.Grounding was established in accordance with the manufacturer's requirements and conditions for the intended use.

2. TEST STANDARDS AND SITES

2.1. DESCRIPTION OF STANDARDS AND RESULTS

The EUT have been tested according to the applicable standards as referenced below.

FCC Part Clause	Test Parameter	Verdict	Remark
15.247(a)(2)	DTS (6dB) Bandwidth	PASS	
15.247(b)(3)	Maximum Peak Conducted Output Power	PASS	
15.247(e)	Maximum Power Spectral Density Level	PASS	
15.247(d)	Unwanted Emission Into Non-Restricted Frequency Bands(conducted)	PASS	
15.247(d) 15.209	Radiated Spurious Emission	PASS	
15.207	Conducted Emission Test	PASS	
15.247(b) 15.203	Antenna Requirement	PASS	
NOTE1: N/A (Not Applicable) NOTE2: The report use radiated measurements in the restricted frequency bands. In addition, the radiated test is also performed to ensure the emissions emanating from the device cabinet also comply with the applicable limits.			

2.2. LIST OF TEST AND MEASUREMENT INSTRUMENTS

For conducted emission at the mains terminals test(Shielded Room 2)							
Equipment	Manufacturer	Model No.	Serial No.	Last Cal.	Cal. Interval	Lab No.	Remark
EMI Test Receiver	Rohde & Schwarz	ESCS30	1002.4500	Jan. 31, 2024	1 Year	LEP-E004	☑
Artificial Mains Network	Rohde & Schwarz	ENV216	100873	Jan. 24, 2024	1 Year	LEP-E001	☑
Artificial Mains Network	Schwarzbeck	NSLK 8128	NSLK 8128-249	Jan. 24, 2024	1 Year	LEP-E047	☐
RF Switching Unit	CD	RSU-M2	8830008	Jan. 31, 2024	1 Year	LEP-E045	☑
Shielded Room 2	MR	MR-L01	LEP-E050	Nov. 17, 2022	3 Year	LEP-E050	☑
Test software	EZ-EMC	Fala	EMC-CON 3A1.1+	N/A	N/A	N/A	☑
For radiated(9K-30M) emission test(966 Chamber 1)							
Equipment	Manufacturer	Model No.	Serial No.	Last Cal.	Cal. Interval	Lab No.	Remark
EMI Test Receiver	Rohde & Schwarz	ESR 3	101849	Jan. 31, 2024	1 Year	LEP-E006	☑
Active Loop Antenna	Schwarzbeck	FMZB 1519C	00008	Jan. 24, 2024	3 Year	LEP-E068	☑
966 Chamber 1	MR	MR-L02	LEP-E051	Nov. 17, 2022	3 Year	LEP-E051	☑
Test software	EZ-EMC	Fala	EMEC-3A1	N/A	N/A	N/A	☑
For radiated(30M-1G) emission test(966 Chamber 1)							
Equipment	Manufacturer	Model No.	Serial No.	Last Cal.	Cal. Interval	Lab No.	Remark
EMI Test Receiver	Rohde & Schwarz	ESR 3	101849	Jan. 31, 2024	1 Year	LEP-E006	☑
TRILOG Broadband Antenna	Schwarzbeck	VULB 9163	743	Nov. 20, 2022	3 Year	LEP-E005	☑
Signal Amplifier	HP	8447D	1726A01222	Jan. 24, 2024	1 Year	LEP-E007	☑
6dB Attenuator	RswTech	5W 6dB	LEP-E084	Jan. 24, 2024	1 Year	LEP-E084	☑
966 Chamber 1	MR	MR-L02	LEP-E051	Nov. 17, 2022	3 Year	LEP-E051	☑
Test software	EZ-EMC	Fala	EMEC-3A1	N/A	N/A	N/A	☑
For radiated(1-18G) emission test(966 Chamber 1)							
Equipment	Manufacturer	Model No.	Serial No.	Last Cal.	Cal. Interval	Lab No.	Remark
Spectrum analyzer	Rohde & Schwarz	FSV40	101412	Jan. 24, 2024	1 Year	LEP-E076	☑
Spectrum analyzer	Agilent	N9020A	MY49100060	Jan. 24, 2024	1 Year	LEP-E020	☑
Horn antenna	Schwarzbeck	BBHA 9120D	01875	Nov. 20, 2022	3 Year	LEP-E024	☑
Preamplifier	Schwarzbeck	BBN 9718B	00010	Jan. 24, 2024	1 Year	LEP-E025	☑
966 Chamber 1	MR	MR-L02	LEP-E051	Nov. 17, 2022	3 Year	LEP-E051	☑
Test software	EZ-EMC	Fala	EMEC-3A1	N/A	N/A	N/A	☑
For radiated(18-40G) emission test(966 Chamber 1)							
Equipment	Manufacturer	Model No.	Serial No.	Last Cal.	Cal. Interval	Lab No.	Remark
Spectrum analyzer	Rohde & Schwarz	FSV40	101412	Jan. 24, 2024	1 Year	LEP-E076	☑
Horn antenna+Preamplifier	COM-POWER	AH840	10100020	Sep. 05, 2022	3 Year	LEP-E075	☑
966 Chamber 1	MR	MR-L02	LEP-E051	Nov. 17, 2022	3 Year	LEP-E051	☑
Test software	EZ-EMC	Fala	EMEC-3A1	N/A	N/A	N/A	☑
For RF test							
Equipment	Manufacturer	Model No.	Serial No.	Last Cal.	Cal. Interval	Lab No.	Remark
Spectrum analyzer	Rohde & Schwarz	FSV40	101412	Jan. 24, 2024	1 Year	LEP-E076	☑
Spectrum analyzer	Agilent	N9020A	MY49100060	Jan. 24, 2024	1 Year	LEP-E020	☑
Vector source	Agilent	N5182A	MY47420382	Jan. 24, 2024	1 Year	LEP-E021	☑
Analog signal source	Agilent	N5171B	MY51350292	Jan. 24, 2024	1 Year	LEP-E022	☑
All instrument	Rohde & Schwarz	CMW 500	1201.002K50	Jan. 24, 2024	1 Year	LEP-E019	☑
High and low temperature chamber	Math-mart	MT-1202-40	LEP-E041	Jan. 24, 2024	1 Year	LEP-E041	☑
control unit	Tonscend	JS0806-2	10165	Jan. 24, 2024	1 Year	LEP-E034	☑
Testing software	Tonscend	JSTS1120-3	Ver 2.6.77.0518	N/A	N/A	N/A	☑

2.3. MEASUREMENT UNCERTAINTY

The following measurement uncertainty levels have been estimated for tests performed on the apparatus:

Parameter	Uncertainty
Radio Frequency	±1x10^-5
Maximum Peak Output Power Test	±1.0%
Conducted Emissions Test	±3.08dB
Radiated Emission Test	±4.60dB
Power Density	±0.9%
Occupied Bandwidth Test	±2.3%
Band Edge Test	±1.2%
Antenna Port Emission	±3dB
Temperature	±3.2%
Humidity	±2.5%
Measurement Uncertainty for a level of Confidence of 95%	

2.4. TEST FACILITY

EMC Lab. : The Laboratory has been assessed and proved to be in compliance with CNAS/CL01
The Certificate Registration Number is L10100.
The Laboratory has been assessed and proved to be in compliance with A2LA
The Certificate Registration Number is 6901.01

FCC Designation No.: CN1351
Test Firm Registration No.: 397428

ISED CAB identifier: CN0151
Test Firm Registration No.: 20133

Test Location : Dongguan Lepont Testing Service Co., Ltd.

Address : Room 102, Building 11, No.7, Houjie Science And Technology Avenue, Houjie, Dongguan, Guangdong, China

3. SETUP OF EQUIPMENT UNDER TEST

3.1. RADIO FREQUENCY TEST SETUP 1

The Bluetooth component's antenna ports(s) of the EUT are connected to the measurement instrument per an appropriate attenuator. The EUT is controlled by PC/software to emit the specified signals for the purpose of measurements.

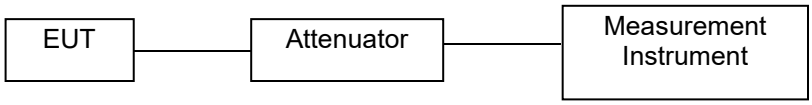

3.2. RADIO FREQUENCY TEST SETUP 2

The test site semi-anechoic chamber has met the requirement of NSA tolerance 4 dB according to the standards: ANSI C63.10. The test distance is 3m.The setup is according to the requirements in Section 13.1.4.1 of ANSI C63.10-2013 and CAN/CSA-CEI/IEC CISPR 32.

Below 30MHz：
The EUT is placed on a turntable 0.8meters above the ground in the chamber, 3 meter away from the antenna (loop antenna). The Antenna should be positioned with its plane vertical at the specified distance from the EUT and rotated about its vertical axis for maximum response at each azimuth about the EUT. The center of the loop shall be 1 m above the ground. For certain applications, the loop antenna plane may also need to be positioned horizontally at the specified distance from the EUT.

Above 30MHz：
The EUT is placed on a turntable 0.8meters above the ground in the chamber, 3 meter away from the antenna. The maximal emission value is acquired by adjusting the antenna height, polarisation and turntable azimuth. Normally, the height range of antenna is 1 m to 4 m, the azimuth range of turntable is 0° to 360°, and the receive antenna has two polarizations Vertical (V) and Horizontal (H).

Above 1GHz:
(Note: the FCC's permission to use 1.5m as an alternative per TCBC Conf call of Dec. 2, 2014.)
The EUT is placed on a turntable 1.5 meters above the ground in the chamber, 3 meter away from the antenna. The maximal emission value is acquired by adjusting the antenna height, polarisation and turntable azimuth. Normally, the height range of antenna is 1 m to 4 m, the azimuth range of turntable is 0° to 360°, and the receive antenna has two polarizations Vertical (V) and Horizontal (H).

(a) Radiated Emission Test Set-Up, Frequency Below 30MHz

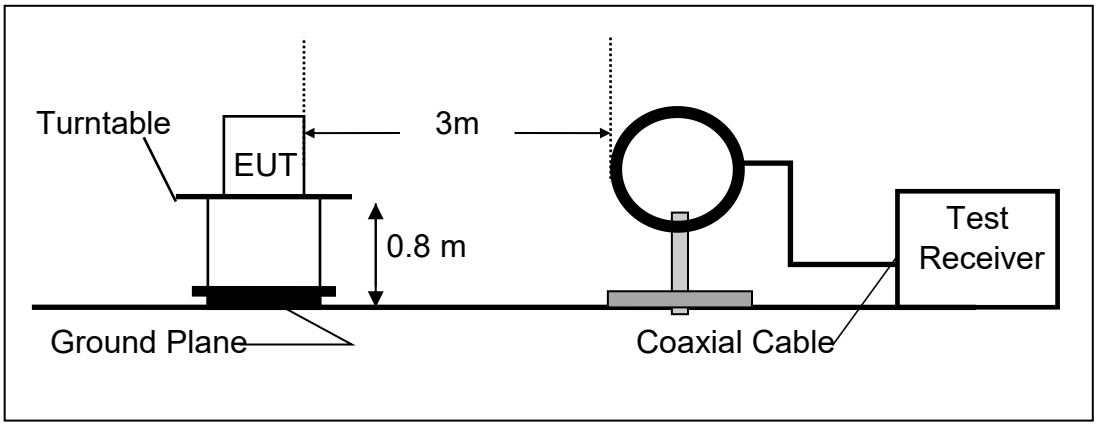

(b) Radiated Emission Test Set-Up, Frequency Below 1000MHz

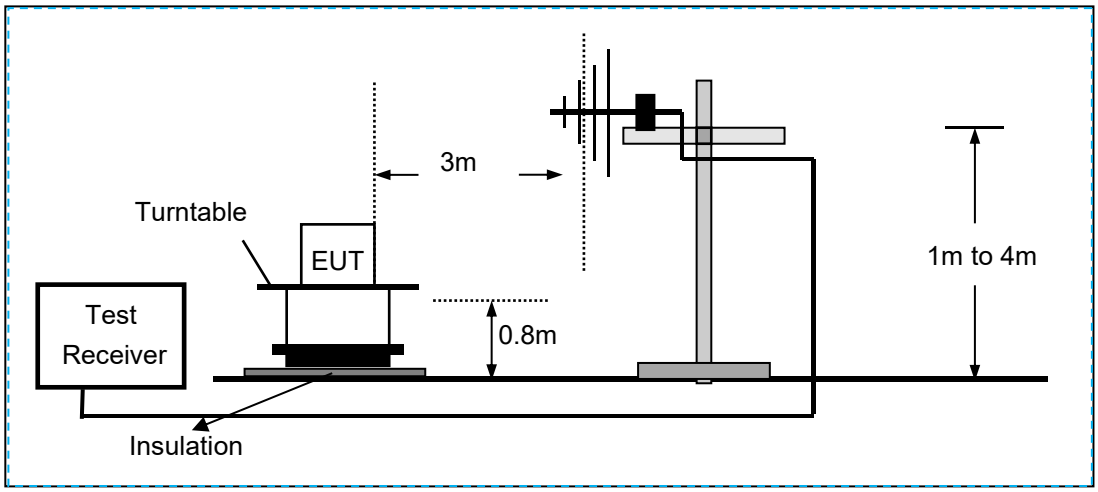

(c) Radiated Emission Test Set-Up, Frequency above 1000MHz

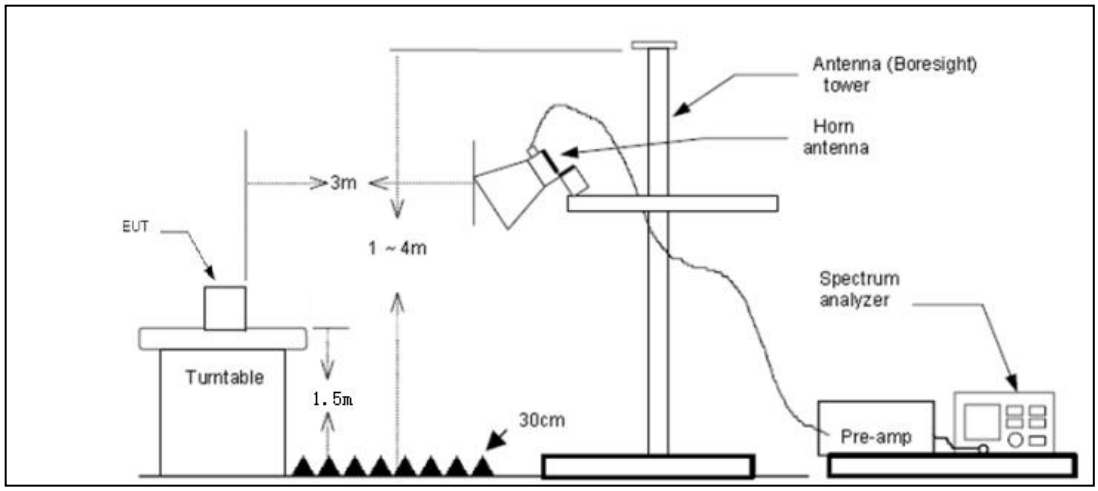

3.3. CONDUCTED EMISSION TEST SETUP

The mains cable of the EUT (Perfect Share Mini) must be connected to LISN. The LISN shall be placed 0.8m from the boundary of EUT and bonded to a ground reference plane for LISN mounted on top of the ground reference plane. This distance is between the closest points of the LISN and the EUT. All other units of the EUT and associated equipment shall be at least 0.8m from the LISN.
Ground connections, where required for safety purposes, shall be connected to the reference ground point of the LISN and, where not otherwise provided or specified by the manufacturer, shall be of same length as the mains cable and run parallel to the mains connection at a separation distance of not more than 0.8m.
According to the requirements in Section 13.1.4.1 of ANSI C63.10-2013 Conducted emissions from the EUT measured in the frequency range between 0.15 MHz and 30 MHz using CISPR Quasi-Peak and average detector mode.

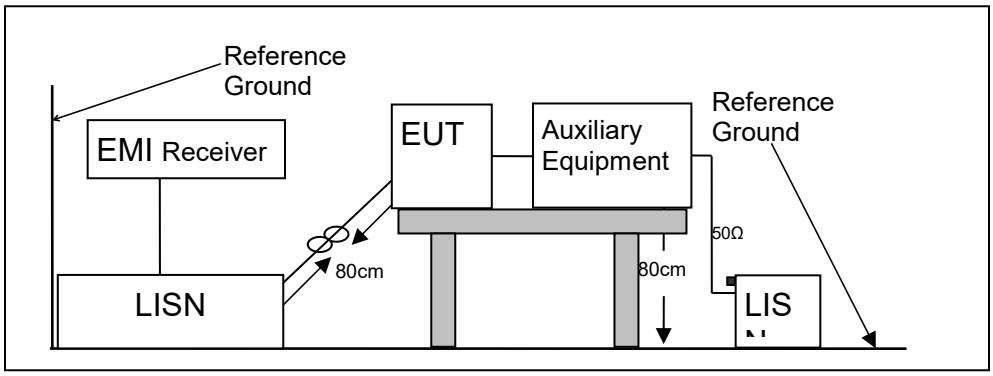

3.4. BLOCK DIAGRAM CONFIGURATION OF TEST SYSTEM

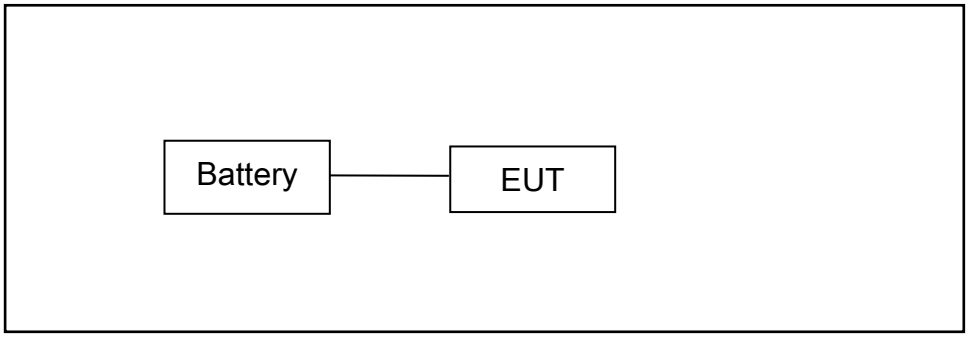

4. TEST RESULTS AND MEASUREMENT DATA

4.1. DTS 6DB BANDWIDTH TEST

4.1.1. Applicable Standard

According to FCC Part 15.247(a)(2) and KDB 558074 D01 15.247 Meas Guidance v05r02

4.1.2. Conformance Limit

The minimum -6 dB bandwidth shall be at least 500 kHz

4.1.3. Test Configuration

Test according to clause 3.1 radio frequency test setup 1

4.1.4. Test Procedure

The EUT was operating in BLE mode and controlled its channel. Printed out the test result from the spectrum by hard copy function.
The RF output of EUT was connected to the spectrum analyzer by RF cable and attenuator. The path loss was compensated to the results for each measurement.
Set to the maximum power setting and enable the EUT transmit continuously
Set RBW = 100 kHz.
Set the video bandwidth (VBW) =300 kHz.
Set Span=2 times OBW
Set Detector = Peak.
Set Trace mode = max hold.
Set Sweep = auto couple.
Allow the trace to stabilize.
Measure the maximum width of the emission that is constrained by the frequencies associated with the two outermost amplitude points (upper and lower frequencies) that are attenuated by 6 dB relative to the maximum level measured in the fundamental emission.
Measure and record the results in the test report.

Test Results:

Modulation Mode	Channel Number	Channel Frequency (MHz)	Measurement Bandwidth (MHz)	Limit (KHz)	Verdict
2.4G(GFSK)	1	2405	1.208	>500	PASS
	10	2445	1.229	>500	PASS
	16	2475	1.230	>500	PASS
Note: N/A (Not Applicable)					

Test Model	6dB Bandwidth
	GFSK
	Channel 1: 2405MHz

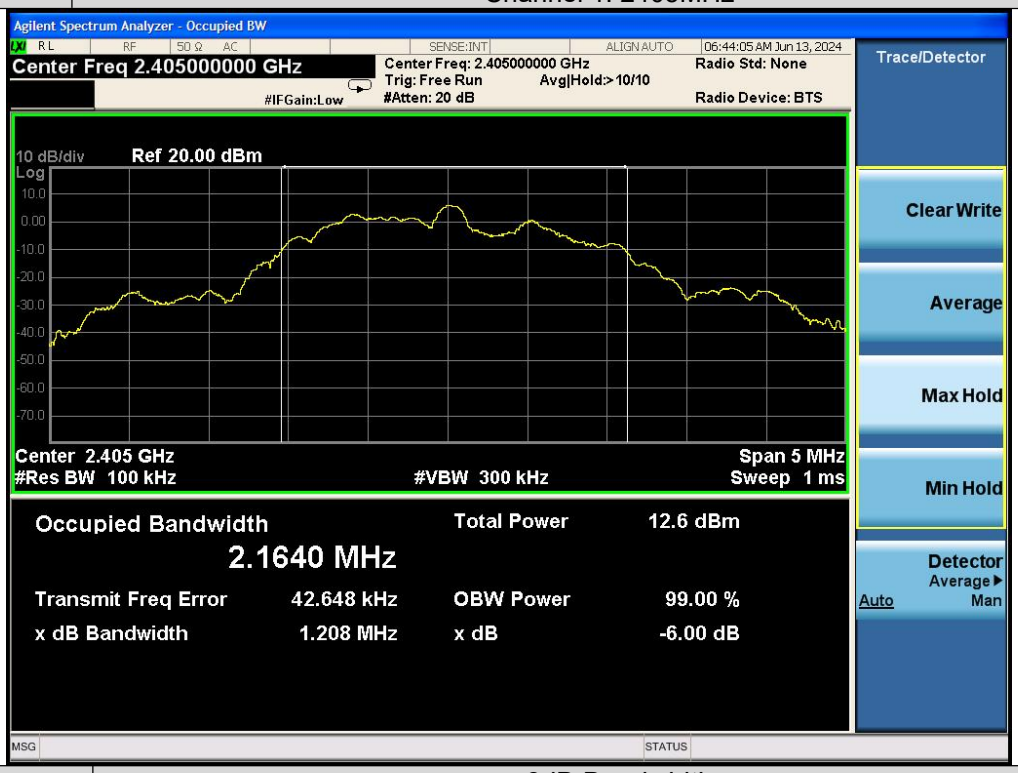

Test Model	6dB Bandwidth
	GFSK
	Channel 10: 2445MHz

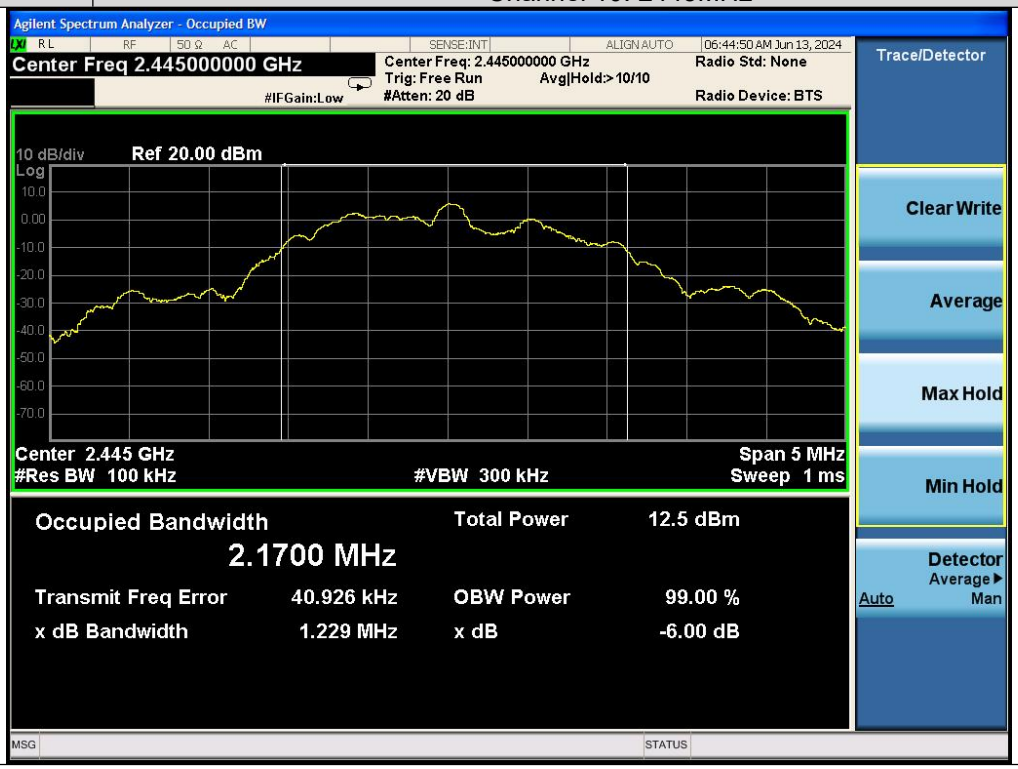

Test Model	6dB Bandwidth
	GFSK
	Channel 16: 2475MHz

4.2. MAXIMUM PEAK CONDUCTED OUTPUT POWER

4.2.1. Applicable Standard

According to FCC Part 15.247(b)(3) and KDB 558074 D01 15.247 Meas Guidance v05r02

4.2.2. Conformance Limit

The maximum peak conducted output power of the intentional radiator for systems using digital modulation in the 2400 - 2483.5 MHz bands shall not exceed: 1 Watt (30dBm).

4.2.3. Test Configuration

Test according to clause 3.1 radio frequency test setup 1

4.2.4. Test Procedure

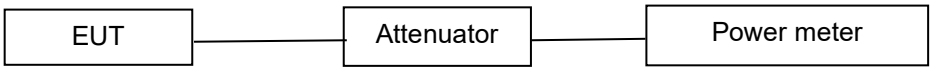

■ **According to FCC Part15.247(b)(3)**

As an alternative to a peak power measurement, compliance with the one Watt limit can be based on a measurement of the maximum conducted output power. For smart system, Maximum Conducted Output Power is defined as the total transmit power delivered to all antennas and antenna elements averaged across all symbols in the signaling alphabet when the transmitter is operating at its maximum power control level. Power must be summed across all antennas and antenna elements. If multiple modes of operation are possible (e.g., alternative modulation methods), the maximum conducted output power is the highest total transmit power occurring in any mode.

Set the RBW ≧DTS bandwidth(about 1MHz).
Set VBW =3*RBW(about 3MHz)
Set the span ≧3*RBW
Set Sweep time = auto couple.
Set Detector = peak.
Set Trace mode = max hold.
Allow trace to fully stabilize. Use peak marker function to determine the peak amplitude level.

■ **According to FCC Part 15.247(b)(4)**:

Conducted output power limit specified in paragraph (b) of this section is based on the use of antennas with directional gains that do not exceed 6 dBi. If transmitting antennas of directional gain greater than 6 dBi are used, the conducted output power from the intentional radiator shall be reduced below the stated values in paragraphs (b)(3) of this section, as appropriate, by the amount in dB that the directional gain of the antenna exceeds 6 dBi.

- Place the EUT on the desktop and set it to launch mode. Remove the antenna from the EUT and connect the low-loss RF cable from the antenna port to the power meter. Measure the peak power of each channel.

Test Mode	Channel Number	Channel Frequency (MHz)	Measurement Level (dBm)	Limit (dBm)
2.4G(GFSK)	1	2405	5.970	30
	10	2445	5.799	30
	16	2475	5.533	30

4.3. MAXIMUM POWER SPECTRAL DENSITY

4.3.1. Applicable Standard

According to FCC Part 15.247(e) and KDB 558074 D01 15.247 Meas Guidance v05r02

4.3.2. Conformance Limit

The transmitter power spectral density conducted from the transmitter to the antenna shall not be greater than 8 dBm in any 3 kHz band during any time interval of continuous transmission.

4.3.3. Test Configuration

Test according to clause 3.1 radio frequency test setup 1

4.3.4. Test Procedure

This procedure shall be used if maximum peak conducted output power was used to demonstrate compliance
The transmitter output (antenna port) was connected to the spectrum analyzer
Set analyzer center frequency to DTS channel center frequency.
Set the span to 1.5 times the DTS bandwidth.
Set the RBW to: 3 kHz
Set the VBW to: 10 kHz.
Set Detector = peak.
Set Sweep time = auto couple.
Set Trace mode = max hold.
Allow trace to fully stabilize.
Use the peak marker function to determine the maximum amplitude level within the RBW.

Operation Mode	Channel Number	Channel Frequency (MHz)	Power density (dBm/3kHz）	Limit (dBm/3kHz)	Verdict
2.4G(GFSK)	1	2405	-9.911	8	PASS
	10	2445	-9.180	8	PASS
	16	2475	-9.119	8	PASS

Test Model	Power Spectral Density
	GFSK
	Channel 1: 2405MHz

Test Model	Power Spectral Density
	GFSK
	Channel 10: 2445MHz

Test Model	Power Spectral Density
	GFSK
	Channel 16: 2475MHz

4.4. UNWANTED EMISSIONS IN NON-RESTRICTED FREQUENCY BANDS

4.4.1. Applicable Standard

According to FCC Part 15.247(d) and KDB 558074 D01 15.247 Meas Guidance v05r02

4.4.2. Conformance Limit

According to FCC Part 15.247(d):
In any 100 kHz bandwidth outside the frequency band in which the spread spectrum or digitally modulated intentional radiator is operating, the radio frequency power that is produced by the intentional radiator shall be at least 20 dB below that in the 100 kHz bandwidth within the band that contains the highest level of the desired power, based on either an RF conducted or a radiated measurement, provided the transmitter demonstrates compliance with the peak conducted power limits. If the transmitter complies with the conducted power limits based on the use of RMS averaging over a time interval, as permitted under paragraph (b)(3) of this section, the attenuation required under this paragraph shall be 30 dB instead of 20 dB.

4.4.3. Test Configuration

Test according to clause 3.1 radio frequency test setup 1

4.4.4. Test Procedure

The transmitter output (antenna port) was connected to the spectrum analyzer

■ **Reference level measurement**
Establish a reference level by using the following procedure:
Set instrument center frequency to DTS channel center frequency.
Set the span to = 1.5 times the DTS bandwidth.
Set the RBW = 100 kHz.
Set the VBW ≥ 3 x RBW.
Set Detector = peak.
Set Sweep time = auto couple.
Set Trace mode = max hold.
Allow trace to fully stabilize.
Use the peak marker function to determine the maximum PSD level.
Note that the channel found to contain the maximum PSD level can be used to establish the reference level.

■ **Emission level measurement**

Set the center frequency and span to encompass frequency range to be measured.
Set the RBW = 100 kHz.
Set the VBW =300 kHz.
Set Detector = peak
Sweep time = auto couple.
Trace mode = max hold.
Allow trace to fully stabilize.
Use the peak marker function to determine the maximum amplitude level.
Ensure that the amplitude of all unwanted emissions outside of the authorized frequency band (excluding restricted frequency bands) are attenuated by at least the minimum requirements .
Report the three highest emissions relative to the limit.

Test Model	PSD(Power Spectral Density) RBW=100kHz, VBW =300 kHz
	GFSK
	Channel 1: 2405MHz

Test Model	Band edge
	GFSK
	Channel 1: 2405MHz

Test Model	Unwanted Emissions in non-restricted frequency bands
	GFSK
	Channel 1: 2405MHz

Test Model	PSD(Power Spectral Density) RBW=100kHz, VBW =300 kHz
	GFSK
	Channel 10: 2445MHz

Test Model	Unwanted Emissions in non-restricted frequency bands
	GFSK
	Channel 10: 2445MHz

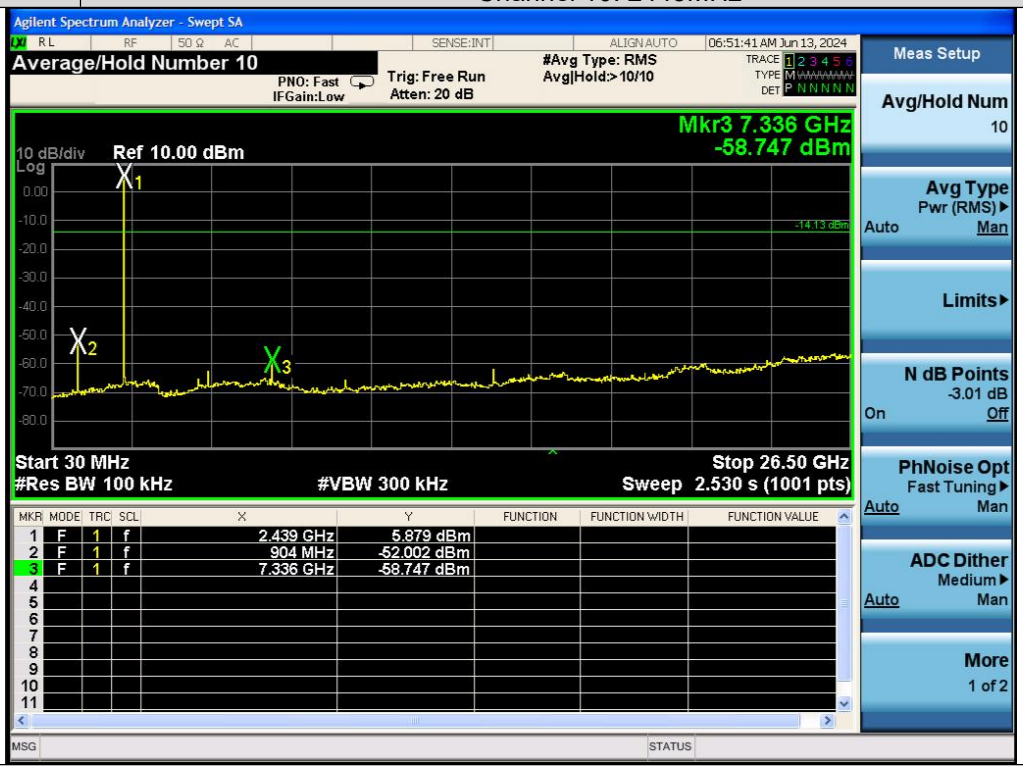

Test Model	PSD(Power Spectral Density) RBW=100kHz, VBW =300 kHz
	GFSK
	Channel 16: 2475MHz

Test Model	Band edge
	GFSK
	Channel 16: 2475MHz

Test Model	Unwanted Emissions in non-restricted frequency bands
	GFSK
	Channel 16: 2475MHz

4.5. RADIATED SPURIOUS EMISSION

4.5.1. Applicable Standard

According to FCC Part 15.247(d) and 15.209 and KDB 558074 D01 15.247 Meas Guidance v05r02

4.5.2. Conformance Limit

According to FCC Part 15.247(d): radiated emissions which fall in the restricted bands, as defined in §15.205(a), must also comply with the radiated emission limits specified in §15.209(a) (see §15.205(c)).

According to FCC Part15.205, Restricted bands

MHz	MHz	MHz	GHz
0.090-0.110	16.42-16.423	399.9-410	4.5-5.15
10.495-0.505	16.69475-16.69525	608-614	5.35-5.46
2.1735-2.1905	16.80425-16.80475	960-1240	7.25-7.75
4.125-4.128	25.5-25.67	1300-1427	8.025-8.5
4.17725-4.17775	37.5-38.25	1435-1626.5	9.0-9.2
4.20725-4.20775	73-74.6	1645.5-1646.5	9.3-9.5
6.215-6.218	74.8-75.2	1660-1710	10.6-12.7
6.26775-6.26825	123-138	2200-2300	14.47-14.5
8.291-8.294	149.9-150.05	2310-2390	15.35-16.2
8.362-8.366	156.52475-156.52525	2483.5-2500	17.7-21.4
8.37625-8.38675	156.7-156.9	2690-2900	22.01-23.12
8.41425-8.41475	162.0125-167.17	3260-3267	23.6-24.0
12.29-12.293	167.72-173.2	3332-3339	31.2-31.8
12.51975-12.52025	240-285	3345.8-3358	36.43-36.5
12.57675-12.57725	322-335.4	3600-4400	(2)
13.36-13.41			

According to FCC Part15.205, the level of any transmitter spurious emission in Restricted bands shall not exceed the level of the emission specified in the following table

Restricted Frequency(MHz)	Field Strength (μV/m)	Field Strength (dBμV/m)	Measurement Distance
0.009-0.490	2400/F(KHz)	20 log (uV/m)	300
0.490-1.705	2400/F(KHz)	20 log (uV/m)	30
1.705-30	30	29.5	30
30-88	100	40	3
88-216	150	43.5	3
216-960	200	46	3
Above 960	500	54	3

4.5.3. Test Configuration

Test according to clause 3.2 radio frequency test setup 2

4.5.4. Test Procedure

This test is required for any spurious emission that falls in a Restricted Band, as defined in Section 15.205. It must be performed with the highest gain of each type of antenna proposed for use with the EUT. Use the following spectrum analyzer settings:
The EUT was placed on a turn table which is 0.8m above ground plane.
Maximum procedure was performed on the highest emissions to ensure EUT compliance.
Span = wide enough to fully capture the emission being measured
RBW = 1 MHz for f ≥ 1 GHz(1GHz to 25GHz), 100 kHz for f < 1 GHz(30MHz to 1GHz)
VBW ≥ RBW
Sweep = auto
Detector function = peak
Trace = max hold
Follow the guidelines in ANSI C63.10-2013 with respect to maximizing the emission by rotating the EUT, measuring the emission while the EUT is situated in three orthogonal planes (if appropriate), adjusting the measurement antenna height and polarization, etc. A pre-amp and a high pass filter are required for this test, in order to provide the measuring system with sufficient sensitivity. Allow the trace to stabilize. The peak reading of the emission, after being corrected by the antenna factor, cable loss, pre-amp gain, etc., is the peak field strength, which must comply with the limit specified in Section 15.35(b). Submit this data. Now set the VBW to 10 Hz, while maintaining all of the other instrument settings. This peak level, once corrected, must comply with the limit specified in Section 15.209. If the dwell time per channel of the hopping signal is less than 100 ms, then the reading obtained with the 10 Hz VBW may be further adjusted by a “duty cycle correction factor”, derived from 20log(dwell time/100 ms), in an effort to demonstrate compliance with the 15.209 limit. Submit this data. Repeat above procedures until all frequency measured was complete.

Test Results:

■ **Spurious Emission below 30MHz (9KHz to 30MHz)**

Frequency	Factor	Meter Reading	Emission Level	Limits	Margin	Detector Type	Ant. Pol.
(MHz)	(dB)	(dBμV)	(dBμV/m)	(dBμV/m)	(dB)		H/V
--	--	--	--	--	--	--	--

Note: the amplitude of spurious emission that is attenuated by more than 20dB below the permissible limit has no need to be reported.
Distance extrapolation factor =40log(Specific distance/ test distance)(dB);
Limit line=Specific limits(dBuV) + distance extrapolation factor

■ Spurious Emission Above 1GHz (1GHz to 25GHz)

Test mode:	GFSK	Frequency:	Channel 1: 2405MHz

Frequency	Meter Reading	Factor	Emission Level	Limits	Margin	Detector Type	Ant. Pol.
(MHz)	(dBμV)	(dB)	(dBμV/m)	(dBμV/m)	(dB)		H/V
5250	48.38	-0.05	48.33	74	-25.67	peak	V
7086	41.31	5.73	47.04	74	-26.96	peak	V
11846	40.38	11.13	51.51	74	-22.49	peak	V
5267	37.02	0.02	37.04	54	-16.96	AVG	V
7103	30.18	5.72	35.9	54	-18.1	AVG	V
11880	28.46	11.19	39.65	54	-14.35	AVG	V
5216	50.07	-0.18	49.89	74	-24.11	peak	H
7137	41.13	5.71	46.84	74	-27.16	peak	H
10180	41.86	8.14	50	74	-24	peak	H
12084	39.79	11.48	51.27	74	-22.73	peak	H
5233	35.76	-0.1	35.66	54	-18.34	AVG	H
7103	30.3	5.72	36.02	54	-17.98	AVG	H
10231	30.16	8.22	38.38	54	-15.62	AVG	H
12135	28.44	11.53	39.97	54	-14.03	AVG	H

Test mode:	GFSK	Frequency:	Channel 10: 2445MHz

Frequency (MHz)	Meter Reading (dBμV)	Factor (dB)	Emission Level (dBμV/m)	Limits (dBμV/m)	Margin (dB)	Detector Type	Ant. Pol. H/V
4890	53.48	0.99	54.47	74	-19.53	peak	V
4890	42.92	1	43.92	54	-10.08	AVG	V
1782	54.1	-4.89	49.21	74	-24.79	peak	V
1799	44.4	-4.85	39.55	54	-14.45	AVG	V
7311	38.42	7.64	46.06	74	-27.94	peak	V
7307	28.51	7.64	36.15	54	-17.85	AVG	V
4890	53.19	0.99	54.18	74	-19.82	peak	H
4890	42.98	1	43.98	54	-10.02	AVG	H
1765	57.72	-4.93	52.79	74	-21.21	peak	H
1782	44.92	-4.89	40.03	54	-13.97	AVG	H
7311	38.78	7.64	46.42	74	-27.58	peak	H
7307	28.37	7.64	36.01	54	-17.99	AVG	H

Test mode:	GFSK	Frequency:	Channel 16: 2475MHz

Frequency (MHz)	Meter Reading (dBμV)	Factor (dB)	Emission Level (dBμV/m)	Limits (dBμV/m)	Margin (dB)	Detector Type	Ant. Pol. H/V
2751	54.82	-3.46	51.36	74	-22.64	peak	V
3006	55.8	-2.5	53.3	74	-20.7	peak	V
3278	50.57	-2.02	48.55	74	-25.45	peak	V
4876	44.92	-1.01	43.91	74	-30.09	peak	V
7137	40.09	5.71	45.8	74	-28.2	peak	V
8140	41.54	5.4	46.94	74	-27.06	peak	V
2751	40.74	-3.46	37.28	54	-16.72	AVG	V
2819	31.17	-3.2	27.97	54	-26.03	AVG	V
3295	37.29	-1.99	35.3	54	-18.7	AVG	V
4893	32.75	-1	31.75	54	-22.25	AVG	V
7086	30.3	5.73	36.03	54	-17.97	AVG	V
8174	31.02	5.47	36.49	54	-17.51	AVG	V
2751	50.12	-3.46	46.66	74	-27.34	peak	H
3006	50.99	-2.5	48.49	74	-25.51	peak	H
3550	45.23	-1.54	43.69	74	-30.31	peak	H
4077	45.63	-0.87	44.76	74	-29.24	peak	H
7086	40.01	5.73	45.74	74	-28.26	peak	H
8684	40.58	6.57	47.15	74	-26.85	peak	H
2751	35.16	-3.46	31.7	54	-22.3	AVG	H
3023	38.36	-2.48	35.88	54	-18.12	AVG	H
3567	33.12	-1.52	31.6	54	-22.4	AVG	H
4094	32.52	-0.88	31.64	54	-22.36	AVG	H
7103	30.29	5.72	36.01	54	-17.99	AVG	H
8701	29.67	6.62	36.29	54	-17.71	AVG	H

Note: (1) All Readings are Peak Value (VBW=3MHz) and Peak Value (VBW=10Hz).
(2) Emission Level= Reading Level+Probe Factor +Cable Loss.
(3) Data of measurement within this frequency range shown " -- " in the table above means the reading of emissions are attenuated more than 20dB below the permissible limits or the field strength is too small to be measured.

■ Spurious Emission below 1GHz (30MHz to 1GHz):

2.4G mode have been tested, and the worst result was report as below:

Test Mode:	GFSK	2405	Test Voltage:	DC 3.3V
Temperature:	23.7℃		Phase:	Vertical
Relative Humidity:	57%		Pressure:	98.3KPa

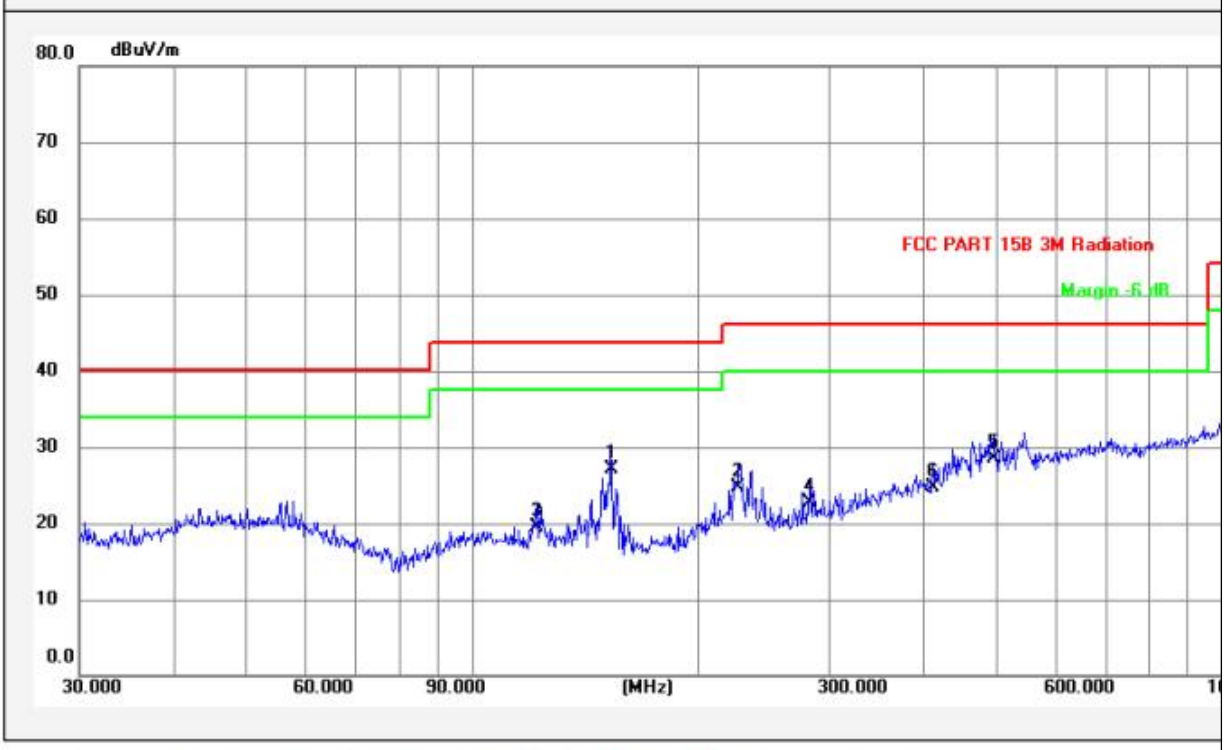

No.	Frequency (MHz)	Factor (dBuV/m)	Reading (dBuV)	Level (dBuV/m)	Limit (dBuV/m)	Margin (dB)	Detector	MK.	Remark
1	153.2004	7.52	19.64	27.16	43.50	-16.34	QP	*	
2	226.8936	11.02	13.59	24.61	46.00	-21.39	QP		
3	121.9753	8.96	10.46	19.42	43.50	-24.08	QP		
4	281.9945	12.00	10.64	22.64	46.00	-23.36	QP		
5	495.9343	15.88	12.71	28.59	46.00	-17.41	QP		
6	411.8240	14.91	9.88	24.79	46.00	-21.21	QP		

Test Mode:	GFSK	2405	Test Voltage:	DC 3.3V
Temperature:	23.7℃		Phase:	Horizontal
Relative Humidity:	57%		Pressure:	98.3KPa

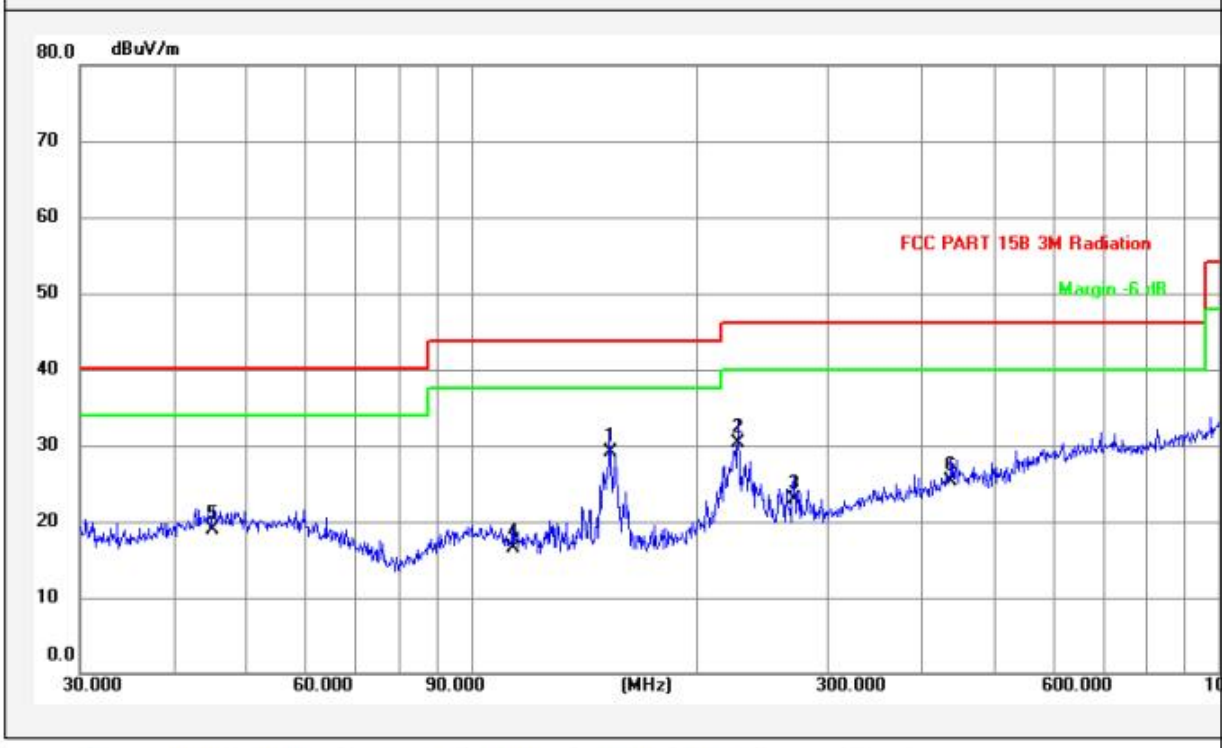

No.	Frequency (MHz)	Factor (dBuV/m)	Reading (dBuV)	Level (dBuV/m)	Limit (dBuV/m)	Margin (dB)	Detector	MK.	Remark
1	153.2004	7.52	21.65	29.17	43.50	-14.33	QP	*	
2	227.6906	11.03	19.31	30.34	46.00	-15.66	QP		
3	270.3748	11.71	11.15	22.86	46.00	-23.14	QP		
4	113.7142	9.71	6.79	16.50	43.50	-27.00	QP		
5	45.0583	12.78	6.04	18.82	40.00	-21.18	QP		
6	438.6553	15.45	9.80	25.25	46.00	-20.75	QP		

■ Spurious Emission in Restricted Band 2310-2390MHz and 2483.5-2500MHz

2.4G mode have been tested, and the worst result was report as below:

Test Mode:	GFSK	2405	Test Voltage:	DC 3.3V
Temperature:	23.7℃		Phase:	Vertical
Relative Humidity:	57%		Pressure:	98.3KPa

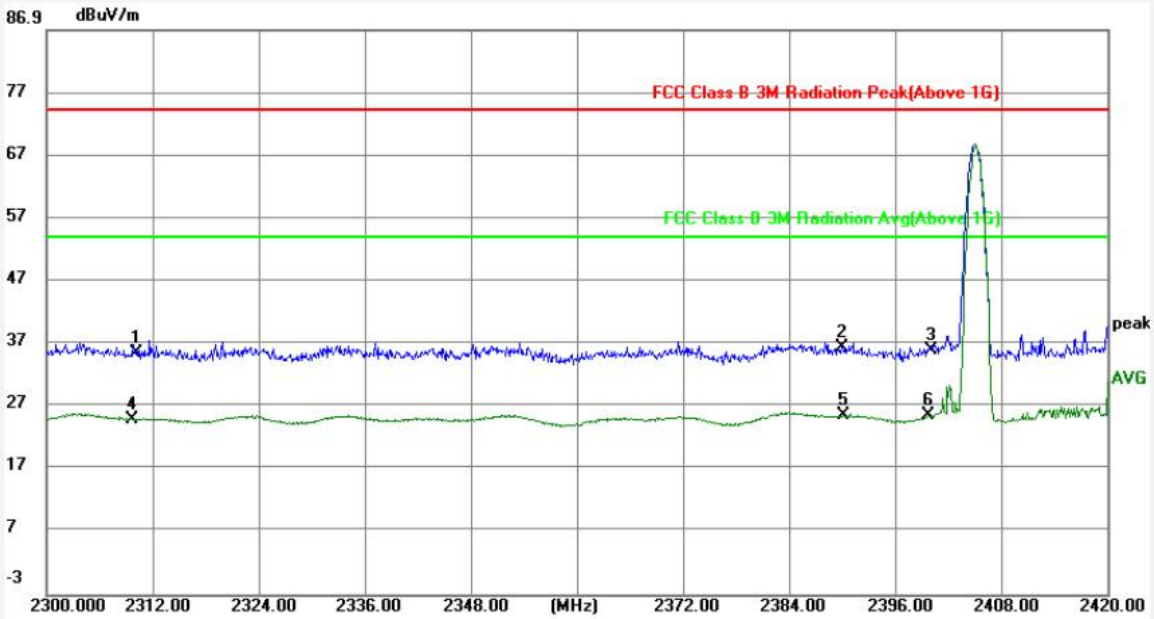

No.	Frequency (MHz)	Factor (dBuV/m)	Reading (dBuV)	Level (dBuV/m)	Limit (dBuV/m)	Margin (dB)	Detector	MK.	Remark
1	2310.000	-5.12	40.58	35.46	74.00	-38.54	peak		
2	2390.000	-4.83	41.15	36.32	74.00	-37.68	peak		
3	2400.000	-4.79	40.63	35.84	74.00	-38.16	peak		
4	2309.600	-5.13	30.13	25.00	54.00	-29.00	AVG		
5	2390.120	-4.83	30.40	25.57	54.00	-28.43	AVG	*	
6	2399.720	-4.79	30.27	25.48	54.00	-28.52	AVG		

Test Mode:	GFSK	2405	Test Voltage:	DC 3.3V
Temperature:	23.7℃		Phase:	Horizontal
Relative Humidity:	57%		Pressure:	98.3KPa

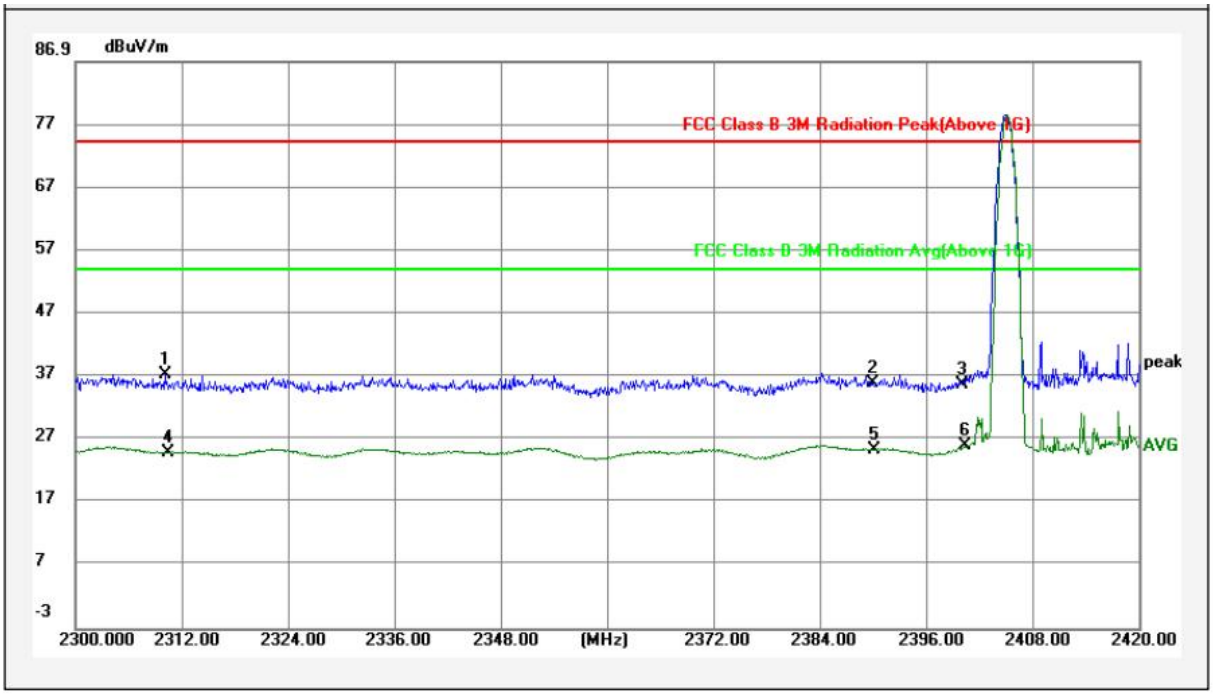

No.	Frequency (MHz)	Factor (dBuV/m)	Reading (dBuV)	Level (dBuV/m)	Limit (dBuV/m)	Margin (dB)	Detector	MK.	Remark
1	2310.000	-5.12	42.43	37.31	74.00	-36.69	peak		
2	2390.000	-4.83	40.74	35.91	74.00	-38.09	peak		
3	2400.000	-4.79	40.52	35.73	74.00	-38.27	peak		
4	2310.440	-5.12	30.13	25.01	54.00	-28.99	AVG		
5	2390.120	-4.83	30.29	25.46	54.00	-28.54	AVG		
6	2400.320	-4.79	30.74	25.95	54.00	-28.05	AVG	*	

Test Mode:	GFSK	2475	Test Voltage:	DC 3.3V
Temperature:	23.7℃		Phase:	Vertical
Relative Humidity:	57%		Pressure:	98.3KPa

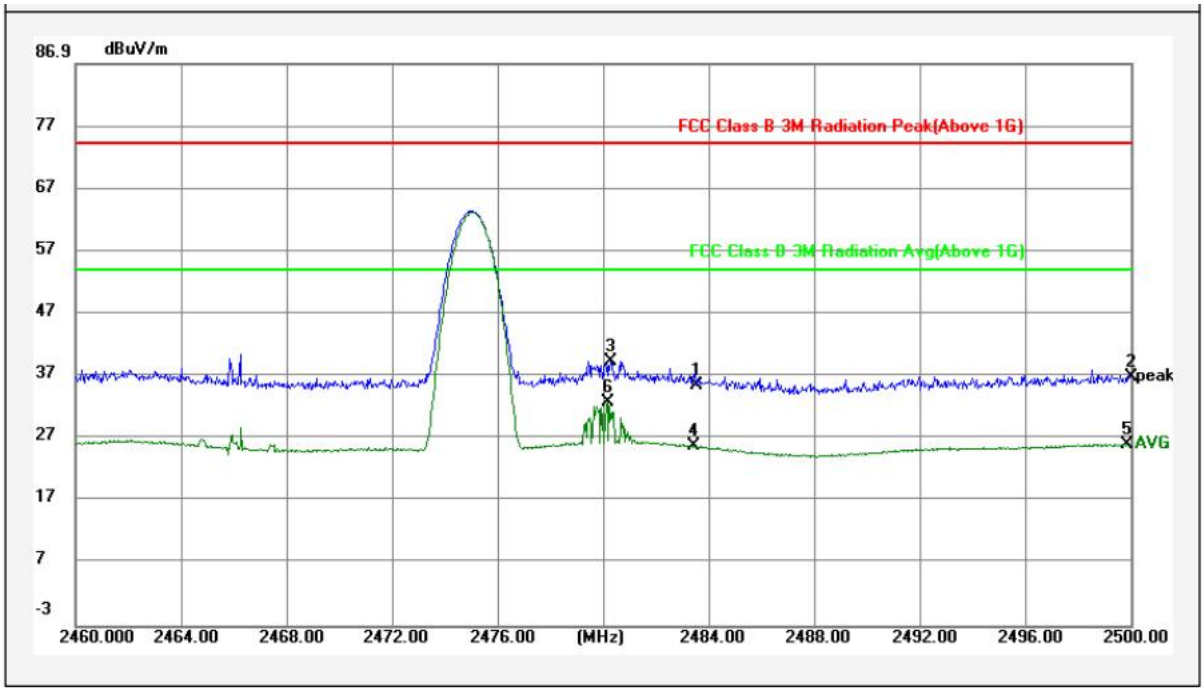

No.	Frequency (MHz)	Factor (dBuV/m)	Reading (dBuV)	Level (dBuV/m)	Limit (dBuV/m)	Margin (dB)	Detector	MK.	Remark
1	2483.500	-4.46	40.06	35.60	74.00	-38.40	peak		
2	2500.000	-4.41	41.27	36.86	74.00	-37.14	peak		
3	2480.280	-4.48	43.83	39.35	74.00	-34.65	peak		
4	2483.440	-4.46	30.26	25.80	54.00	-28.20	AVG		
5	2499.880	-4.41	30.38	25.97	54.00	-28.03	AVG		
6	2480.160	-4.48	37.27	32.79	54.00	-21.21	AVG	*	

Test Mode:	GFSK	2475	Test Voltage:	DC 3.3V
Temperature:	23.7℃		Phase:	Horizontal
Relative Humidity:	57%		Pressure:	98.3KPa

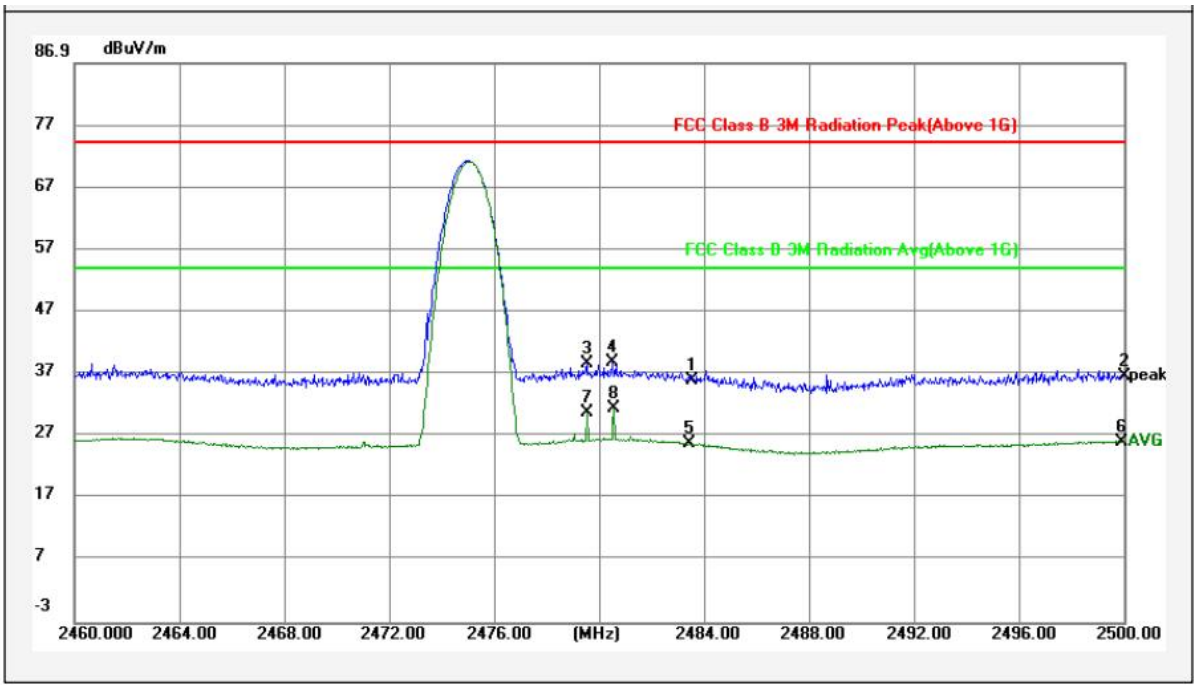

No.	Frequency (MHz)	Factor (dBuV/m)	Reading (dBuV)	Level (dBuV/m)	Limit (dBuV/m)	Margin (dB)	Detector	MK.	Remark
1	2483.500	-4.46	40.40	35.94	74.00	-38.06	peak		
2	2500.000	-4.41	41.07	36.66	74.00	-37.34	peak		
3	2479.520	-4.48	43.10	38.62	74.00	-35.38	peak		
4	2480.480	-4.48	43.32	38.84	74.00	-35.16	peak		
5	2483.440	-4.46	30.29	25.83	54.00	-28.17	AVG		
6	2499.920	-4.41	30.55	26.14	54.00	-27.86	AVG		
7	2479.560	-4.48	35.18	30.70	54.00	-23.30	AVG		
8	2480.560	-4.48	36.01	31.53	54.00	-22.47	AVG	*	

4.6. CONDUCTED EMISSION TEST

4.6.1. Applicable Standard

According to FCC Part 15.207(a)

4.6.2. Conformance Limit

Conducted Emission Limit		
Frequency(MHz)	Quasi-peak	Average
0.15-0.5	66-56	56-46
0.5-5.0	56	46
5.0-30.0	60	50
Note: 1. The lower limit shall apply at the transition frequencies 2. The limit decreases in line with the logarithm of the frequency in the range of 0.15 to 0.50MHz.		

Remark: Test results were obtained from the following equation:
Measurement (dBμV) = LISN Factor (dB) + Cable Loss (dB) + Reading (dBμV)
Margin (dB) = Measurement (dBμV) - Limit (dBμV)

4.6.3. Test Configuration

Test according to clause 3.3 conducted emission test setup

4.6.4. Test Procedure

The EUT was placed on a table which is 0.8m above ground plane.
Maximum procedure was performed on the highest emissions to ensure EUT compliance.
Repeat above procedures until all frequency measured were complete.

Test Results：

Test Mode:	Charging		Test Voltage:	AC 120V/60Hz
Temperature:	22.4℃		Phase:	L1
Relative Humidity:	52%		Pressure:	101.3KPa

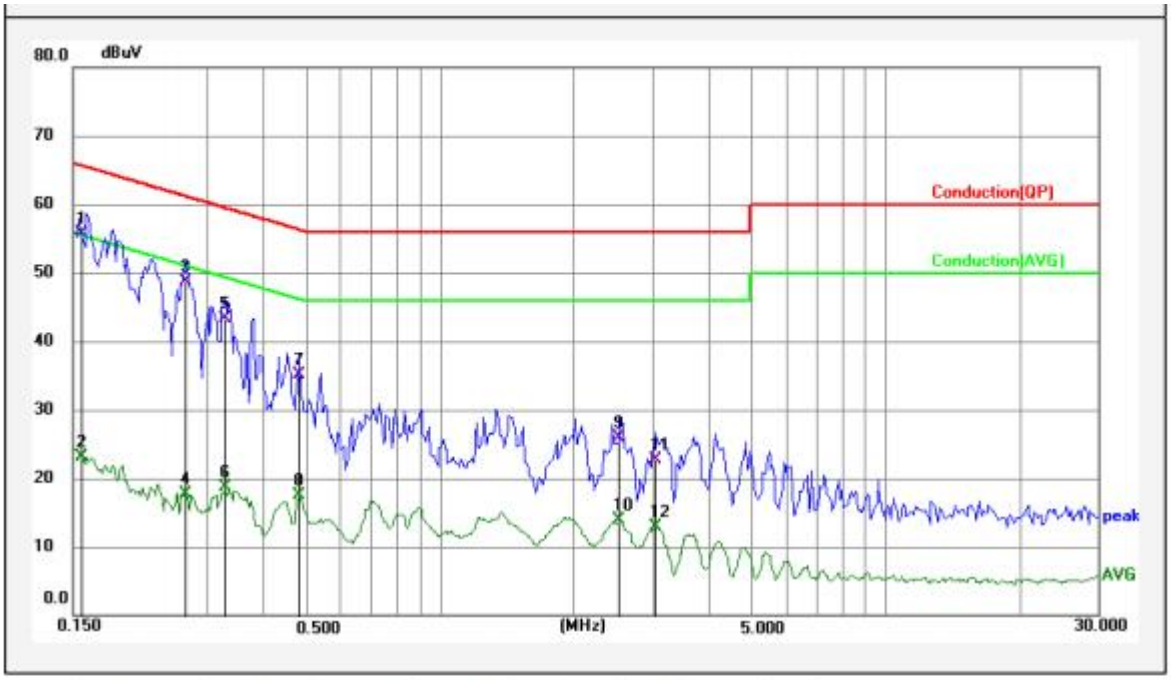

No.	Frequency (MHz)	Factor (dBuV)	Reading (dBuV)	Level (dBuV)	Limit (dBuV)	Margin (dB)	Detector	MK.	Remark
1	0.1564	10.70	45.04	55.74	65.65	-9.91	QP	*	
2	0.1564	10.70	12.47	23.17	55.65	-32.48	AVG		
3	0.2682	10.76	38.02	48.78	61.17	-12.39	QP		
4	0.2682	10.76	7.04	17.80	51.17	-33.37	AVG		
5	0.3301	10.80	32.56	43.36	59.45	-16.09	QP		
6	0.3301	10.80	7.93	18.73	49.45	-30.72	AVG		
7	0.4838	10.88	24.16	35.04	56.27	-21.23	QP		
8	0.4838	10.88	6.72	17.60	46.27	-28.67	AVG		
9	2.5384	11.26	14.60	25.86	56.00	-30.14	QP		
10	2.5384	11.26	2.56	13.82	46.00	-32.18	AVG		
11	3.0480	11.28	11.44	22.72	56.00	-33.28	QP		
12	3.0480	11.28	1.71	12.99	46.00	-33.01	AVG		

Test Mode:	Charging		Test Voltage:	AC 120V/60Hz
Temperature:	22.4℃		Phase:	N
Relative Humidity:	52%		Pressure:	101.3KPa

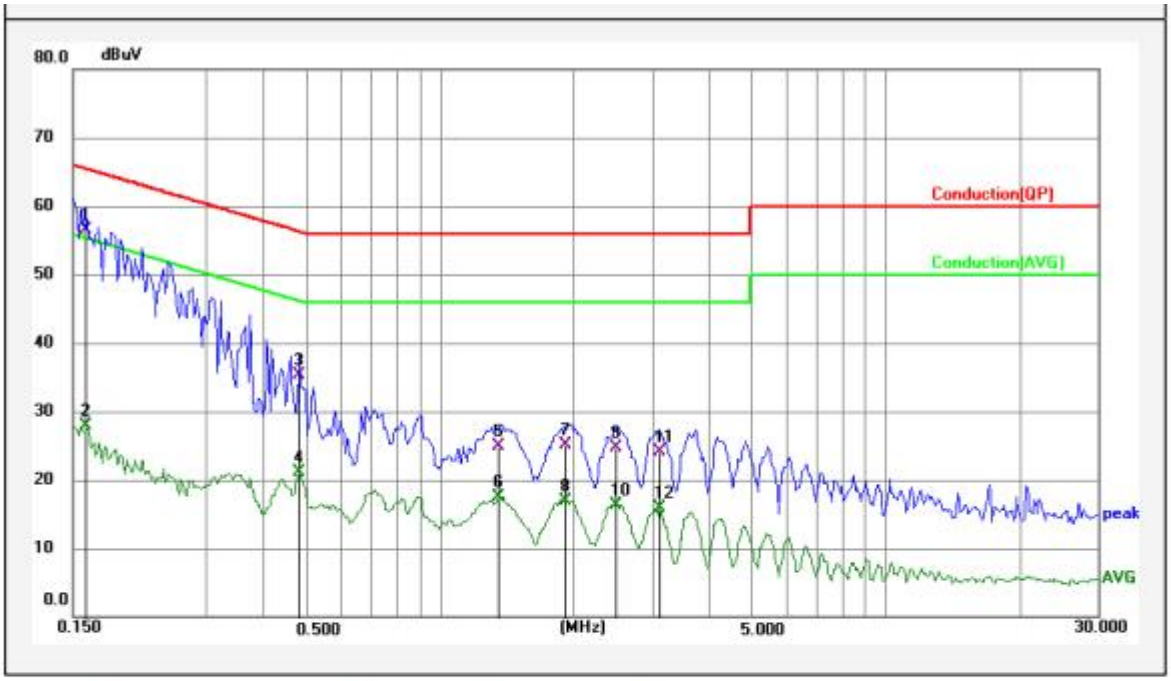

No.	Frequency (MHz)	Factor (dBuV)	Reading (dBuV)	Level (dBuV)	Limit (dBuV)	Margin (dB)	Detector	MK.	Remark
1	0.1610	10.84	45.71	56.55	65.41	-8.86	QP	*	
2	0.1610	10.84	16.97	27.81	55.41	-27.60	AVG		
3	0.4838	11.05	24.28	35.33	56.27	-20.94	QP		
4	0.4838	11.05	10.07	21.12	46.27	-25.15	AVG		
5	1.3526	11.00	13.94	24.94	56.00	-31.06	QP		
6	1.3526	11.00	6.59	17.59	46.00	-28.41	AVG		
7	1.9207	11.00	14.08	25.08	56.00	-30.92	QP		
8	1.9207	11.00	5.91	16.91	46.00	-29.09	AVG		
9	2.4982	11.00	13.72	24.72	56.00	-31.28	QP		
10	2.4982	11.00	5.32	16.32	46.00	-29.68	AVG		
11	3.1218	11.00	13.20	24.20	56.00	-31.80	QP		
12	3.1218	11.00	4.91	15.91	46.00	-30.09	AVG		

4.7. ANTENNA APPLICATION

4.7.1. Antenna Requirement

Standard	Requirement
FCC CRF Part 15.203	An intentional radiator shall be designed to ensure that no antenna other than that furnished by the responsible party shall be used with the device. The use of a permanently attached antenna or of an antenna that uses a unique coupling to the intentional radiator shall be considered sufficient to comply with the provisions of this section. The manufacturer may design the unit so that a broken antenna can be replaced by the user, but the use of a standard antenna jack or electrical connector is prohibited. This requirement does not apply to carrier current devices or to devices operated under the provisions of §15.211, §15.213, §15.217, §15.219, or §15.221. Further, this requirement does not apply to intentional radiators that must be professionally installed, such as perimeter protection systems and some field disturbance sensors, or to other intentional radiators which, in accordance with §15.31(d), must be measured at the installation site. However, the installer shall be responsible for ensuring that the proper antenna is employed so that the limits in this part are not exceeded.

For intentional device, according to FCC 47 CFR Section 15.203, an intentional radiator shall be designed to ensure that no antenna other than that furnished by the responsible party shall be used with the device.

4.7.2. Result:

PASS.

The EUT has 1 antennas: an PCB Antenna for BLE, antenna has a gain of -0.71 dBi;

☒ Antenna use a permanently attached antenna which is not replaceable.
☐ Not using a standard antenna jack or electrical connector for antenna replacement
☐ The antenna has to be professionally installed (please provide method of installation)

Note:which in accordance to section 15.203, please refer to the internal photos.

--------- END OF REPORT --------