TEST REPORT

Product	:	CS-iWPT302 Wireless Bluetooth Transmitter Series
Trade mark	:	N/A
Model/Type reference	:	See section 5.2
Serial Number	:	N/A
Report Number	:	EED32Q80776501
FCC ID	:	2BG7WCS-IWPT302
Date of Issue	:	Jul. 26, 2024
Test Standards	:	47 CFR Part 15 Subpart C
Test result	:	PASS

Prepared for:

Xi'an Chinastar M&C Limited
F6, bldg A, No.1309 shanglinyuan 4th Rd, Xi'an Hi-tech Development Zone, Xi'an, China

Prepared by:

Centre Testing International Group Co., Ltd.
Hongwei Industrial Zone, Bao'an 70 District, Shenzhen, Guangdong, China
TEL: +86-755-3368 3668
FAX: +86-755-3368 3385

Compiled by:	Zhenxia Wen	Reviewed by:	Frazer. Li
	Zhenxia Wen		Frazer Li
Approved by:	Aaron Ma	Date:	Jul. 26, 2024
	Aaron Ma		

CENTRE TESTING INTERNATIONAL GROUP CO.,LTD. CTI Report Seal

Check No.: 8954050624

2 Version

Version No.	Date	Description
00	Jul. 26, 2024	Original

3 Content

1 COVER PAGE 1
2 VERSION 2
3 CONTENT 3
4 TEST SUMMARY 4
5 GENERAL INFORMATION 7
5.1 CLIENT INFORMATION 7
5.2 GENERAL DESCRIPTION OF EUT 7
5.3 TEST CONFIGURATION 8
5.4 TEST ENVIRONMENT 9
5.5 DESCRIPTION OF SUPPORT UNITS 9
5.6 TEST LOCATION 9
5.7 MEASUREMENT UNCERTAINTY (95% CONFIDENCE LEVELS, K=2) 10
6 EQUIPMENT LIST 11
7 TEST RESULTS AND MEASUREMENT DATA 14
7.1 ANTENNA REQUIREMENT 14
7.2 MAXIMUM CONDUCTED OUTPUT POWER 15
7.3 DTS BANDWIDTH 16
7.4 MAXIMUM POWER SPECTRAL DENSITY 17
7.5 BAND EDGE MEASUREMENTS AND CONDUCTED SPURIOUS EMISSION 18
7.6 RADIATED SPURIOUS EMISSION & RESTRICTED BANDS 19
8 APPENDIX BLUETOOTH LE 30
9 PHOTOGRAPHS OF TEST SETUP 31
10 PHOTOGRAPHS OF EUT CONSTRUCTIONAL DETAILS 33

4 Test Summary

Test Item	Test Requirement	Result
Antenna Requirement	47 CFR Part 15 Subpart C Section 15.203/15.247 (c)	PASS
AC Power Line Conducted Emission	47 CFR Part 15 Subpart C Section 15.207	N/A
DTS Bandwidth	47 CFR Part 15 Subpart C Section 15.247 (a)(2)	PASS
Maximum Conducted Output Power	47 CFR Part 15 Subpart C Section 15.247 (b)(3)	PASS
Maximum Power Spectral Density	47 CFR Part 15 Subpart C Section 15.247 (e)	PASS
Band Edge Measurements	47 CFR Part 15 Subpart C Section 15.247(d)	PASS
Conducted Spurious Emissions	47 CFR Part 15 Subpart C Section 15.247(d)	PASS
Radiated Spurious Emission & Restricted bands	47 CFR Part 15 Subpart C Section 15.205/15.209	PASS

Remark:
N/A: Inapplicability
Company Name and Address shown on Report, the sample(s) and sample Information were provided by the applicant who should be responsible for the authenticity which CTI hasn't verified.

Model No.: CS-iWPT302-P-LLP5-B34WNM-N0X00-00, CS-iWPT302-P-LP5-B34WNM-N0X00-00, CS-iWPT302-P-LP5-B34WNM-W0X00-00, CS-iWPT302-P-HP5-B34WNM-W0X00-00, CS-iWPT302-T/a And other CS-iWPT302 Derived models: CS-iWPT302-P-□-B34W□ -□0X00-□, CS-iWPT302-T/□(Refer to model differences table for details), Only the model CS-iWPT302-P-LLP5-B34WNM-N0X00-00 was tested. All models are identical to each other except transformer board and sensor models used. See the table as below for more details. As a result, models CS-iWPT302-P-LP5-B34WNM-W0X00-00 was chosen to conduct the full tests.
Model differences table for details:
For CS-iWPT302-P-□-B34W□-□0X00-□:

CS-iWPT302-P-□-B34W□-□0X00-□
① ② ③ ④

The "①" represent Pressure range & Pressure accuracy, The "②" represent Pressure connector type, The "③" represent sealing material, The "④" represent some special instructions

"①": Pressure range & Pressure accuracy, eg: LP5

Code 1	Pressure range	Code 2	Pressure accuracy
FLP	X<0	2	±0.25%F.S
LLP	0～2≤X≤5bar	5	±0.5%F.S
LP	0～5＜X≤50bar	A	±1.0%F.S
HP	0～50＜X≤600bar	B	±1.5%F.S
XX	no limit	C	±3%F.S
		1	±0.1%F.S
		Other undefined codes	Other undefined values

"②": Pressure connector type, eg: NM

Code 1	Pressure connector type
GM	G1/4 external thread
GF	G1/4 internal thread
G2	G1/2 external thread
GT	G1/2 internal thread
G8	G1/8 external thread
G3	G3/4 external thread
GE	G3/8 internal thread
GS	G3/ 8external thread
NM	NPT1/4 external thread

NF	NPT1/4 internal thread
N2	NPT1/2 external thread
N8	NPT1/8 external thread
RM	R1/4 external thread
R2	R1/2 external thread
R8	R1/8 external thread
M2	M20×1.5 external thread
7M	7/16-20UNF external thread
7F	7/16-20UNF internal thread
9M	9/16-20UNF external thread
"xx"	Refer to the corresponding manual

"③" : Sealing material, eg: W

Code	Sealing material
N	Nitrile rubber
C	chloroprene rubber
F	fluoro rubber
W	welded seal

"④": Some special instructions, eg: 00

Code	Remark
00	No special requirements
S1	Special requirement 1
S2	Special requirement 2
Sx	Special requirement x

- For CS-iWPT302-T/□

The "□" may be the numbers 0 to 9 or the letters A~Z or a~z , or a blank space, that indicates different types of temperature sensors or different temperature measurement accuracies, please refer to the instruction manual.

Remark:

Model CS-iWPT302-P-□-B34W□-□0X00-□ and model CS-iWPT302-T/□ are Sharing control board and Battery cathode board, the difference in the circuit between them is the transformer board.

For pressure transmitters, the types of transformer boards can be divided into current excitation type and voltage excitation type, which depending on the selected type of pressure sensor. The current excitation type circuit has more operational amplifier circuits (used to generate excitation current) than the voltage

excitation type circuit. Both pressure transmitters and temperature transmitters use the same signal conditioner chip.

The sample selected for this test is the current excitation type of the circuit, which can cover voltage excitation modules, include CS-iWPT302-T/☐ temperature transmitters modules.

5 General Information

5.1 Client Information

Applicant:	Xi'an Chinastar M&C Limited
Address of Applicant:	F6, bldg A, No.1309 shanglinyuan 4th Rd, Xi'an Hi-tech Development Zone, Xi'an, China
Manufacturer:	Xi'an Chinastar M&C Limited
Address of Manufacturer:	F6, bldg A, No.1309 shanglinyuan 4th Rd, Xi'an Hi-tech Development Zone, Xi'an, China
Factory:	Xi'an Chinastar M&C Limited
Address of Factory:	No.1309 shanglinyuan 4th Rd, Xi'an Hi-tech Development Zone, Xi'an, China

5.2 General Description of EUT

Product Name:	CS-iWPT302 Wireless Bluetooth Transmitter Series	
Model No.:	CS-iWPT302-P-LLP5-B34WNM-N0X00-00, CS-iWPT302-P-LP5-B34WNM-N0X00-00, CS-iWPT302-P-LP5-B34WNM-W0X00-00, CS-iWPT302-P-HP5-B34WNM-W0X00-00, CS-iWPT302-T/a And other CS-iWPT302 Derived models：CS-iWPT302-P-☐-B34W☐-☐0X00-☐, CS-iWPT302-T/☐(Refer to model differences table for details)	
Test Model No.:	CS-iWPT302-P-LLP5-B34WNM-N0X00-00	
Trade mark:	N/A	
Product Type:	☐ Mobile ☐ Portable ☒ Fixed Location	
Operation Frequency:	2402MHz~2480MHz	
Modulation Type:	GFSK	
Transfer Rate:	☒ 1Mbps ☐ 2Mbps	
Number of Channel:	40	
Antenna Type:	PCB Antenna	
Antenna Gain:	-2.34dBi	
Power Supply:	Battery:	DC 3.6V
Test Voltage:	DC 3.6V	
Sample Received Date:	Jul. 09, 2024	
Sample tested Date:	Jul. 09, 2024 to Jul. 15, 2024	

Operation Frequency each of channel							
Channel	Frequency	Channel	Frequency	Channel	Frequency	Channel	Frequency
0	2402MHz	10	2422MHz	20	2442MHz	30	2462MHz
1	2404MHz	11	2424MHz	21	2444MHz	31	2464MHz
2	2406MHz	12	2426MHz	22	2446MHz	32	2466MHz
3	2408MHz	13	2428MHz	23	2448MHz	33	2468MHz
4	2410MHz	14	2430MHz	24	2450MHz	34	2470MHz
5	2412MHz	15	2432MHz	25	2452MHz	35	2472MHz
6	2414MHz	16	2434MHz	26	2454MHz	36	2474MHz
7	2416MHz	17	2436MHz	27	2456MHz	37	2476MHz
8	2418MHz	18	2438MHz	28	2458MHz	38	2478MHz
9	2420MHz	19	2440MHz	29	2460MHz	39	2480MHz

Note:
In section 15.31(m), regards to the operating frequency range over 10 MHz, the lowest frequency, the middle frequency, and the highest frequency of channel were selected to perform the test, and the selected channel see below:

Channel	Frequency
The lowest channel (CH0)	2402MHz
The middle channel (CH19)	2440MHz
The highest channel (CH39)	2480MHz

5.3 Test Configuration

EUT Test Software Settings:	
Software:	SmartSnippets Toolbox v5.0.16
EUT Power Grade:	Class2 (Power level is built-in set parameters and cannot be changed and selected)
Use test software to set the lowest frequency, the middle frequency and the highest frequency keep transmitting of the EUT.	

Test Mode	Modulation	Rate	Channel	Frequency(MHz)
Mode a	GFSK	1Mbps	CH0	2402
Mode b	GFSK	1Mbps	CH19	2440
Mode c	GFSK	1Mbps	CH39	2480

5.4 Test Environment

Operating Environment:	
Radiated Spurious Emissions:	
Temperature:	22~25.0 °C
Humidity:	50~55 % RH
Atmospheric Pressure:	1010mbar
Conducted Emissions:	
Temperature:	22~25.0 °C
Humidity:	50~55 % RH
Atmospheric Pressure:	1010mbar
RF Conducted:	
Temperature:	22~25.0 °C
Humidity:	50~55 % RH
Atmospheric Pressure:	1010mbar

5.5 Description of Support Units

The EUT has been tested with associated equipment below.

1） support equipment

Description	Manufacturer	Model No.	Certification	Supplied by
Netbook	HP	14-ce0061TX	FCC&CE	CTI

5.6 Test Location

All tests were performed at:

Centre Testing International Group Co., Ltd
Building C, Hongwei Industrial Park Block 70, Bao'an District, Shenzhen, China
Telephone: +86 (0) 755 33683668 Fax:+86 (0) 755 33683385
No tests were sub-contracted.
FCC Designation No.: CN1164

5.7 Measurement Uncertainty (95% confidence levels, k=2)

No.	Item	Measurement Uncertainty
1	Radio Frequency	7.9×10^{-8}
2	RF power, conducted	0.46dB (30MHz-1GHz)
		0.55dB (1GHz-40GHz)
3	Radiated Spurious emission test	3.3dB (9kHz-30MHz)
		4.3dB (30MHz-1GHz)
		4.5dB (1GHz-18GHz)
		3.4dB (18GHz-40GHz)
4	Conduction emission	3.5dB (9kHz to 150kHz)
		3.1dB (150kHz to 30MHz)
5	Temperature test	0.64°C
6	Humidity test	3.8%
7	DC power voltages	0.026%

6 Equipment List

RF test system					
Equipment	**Manufacturer**	**Model No.**	**Serial Number**	**Cal. Date (mm-dd-yyyy)**	**Cal. Due date (mm-dd-yyyy)**
Communication test set	R&S	CMW500	107929	06-26-2024	06-25-2025
Signal Generator	R&S	SMBV100A	1407.6004K02-262149-CV	09-05-2023	09-04-2024
Spectrum Analyzer	R&S	FSV40	101200	07-25-2023	07-24-2024
RF control unit(power unit)	MWRF-test	MW100-RFCB	MW220620CTI-42	06-25-2024	06-24-2025
High-low temperature test chamber	Dong Guang Qin Zhuo	LK-80GA	QZ20150611879	11-12-2023	12-10-2024
Temperature/ Humidity Indicator	biaozhi	HM10	1804186	05-29-2024	05-28-2025
BT&WI-FI Automatic test software	MWRF-test	MTS 8310	V2.0.0.0	---	---
Spectrum Analyzer	R&S	FSV3044	101509	01-17-2024	01-16-2025

3M Semi-anechoic Chamber (2)- Radiated disturbance Test					
Equipment	Manufacturer	Model	Serial No.	Cal. Date	Due Date
3M Chamber & Accessory Equipment	TDK	SAC-3	---	05/22/2022	05/21/2025
Receiver	R&S	ESCI7	100938-003	09/22/2023	09/21/2024
Spectrum Analyzer	R&S	FSV40	101200	07/25/2023	07/24/2024
TRILOG Broadband Antenna	schwarzbeck	VULB 9163	9163-618	05/22/2022	05/21/2025
Loop Antenna	Schwarzbeck	FMZB 1519B	1519B-076	04/16/2024	04/15/2025
Microwave Preamplifier	Tonscend	EMC051845SE	980380	12/14/2023	12/13/2024
Horn Antenna	A.H.SYSTEMS	SAS-574	374	07/02/2023	07/01/2026
Horn Antenna	ETS-LINGREN	BBHA 9120D	9120D-1869	04/16/2024	04/15/2025
Preamplifier	Agilent	11909A	12-1	03/22/2024	03/21/2025
Preamplifier	CD	PAP-1840-60	6041.6042	06/19/2024	06/18/2025
Test software	Fara	EZ-EMC	EMEC-3A1-Pre	---	---
Cable line	Fulai(7M)	SF106	5219/6A	---	---
Cable line	Fulai(6M)	SF106	5220/6A	---	---
Cable line	Fulai(3M)	SF106	5216/6A	---	---
Cable line	Fulai(3M)	SF106	5217/6A	---	---

3M full-anechoic Chamber					
Equipment	**Manufacturer**	**Model No.**	**Serial Number**	**Cal. Date (mm-dd-yyyy)**	**Cal. Due date (mm-dd-yyyy)**
RSE Automatic test software	JS Tonscend	JS36-RSE	10166	---	---
Receiver	Keysight	N9038A	MY57290136	01-09-2024	01-08-2025
Spectrum Analyzer	Keysight	N9020B	MY57111112	01-19-2024	01-18-2025
Spectrum Analyzer	Keysight	N9030B	MY57140871	01-13-2024	01-12-2025
TRILOG Broadband Antenna	Schwarzbeck	VULB 9163	9163-1148	04-28-2024	04-27-2025
Horn Antenna	Schwarzbeck	BBHA 9170	9170-832	04-16-2024	04-15-2025
Horn Antenna	ETS-LINDGREN	3117	57407	07-03-2024	07-02-2025
Preamplifier	Tonscend	EMC051845SE	980380	12-14-2023	12-13-2024
Preamplifier	EMCI	EMC001330	980563	03-08-2024	03-07-2025
Preamplifier	JS Tonscend	TAP-011858	AP21B806112	07-25-2023	07-24-2024
Communication test set	R&S	CMW500	102898	12-14-2023	12-13-2024
Temperature/ Humidity Indicator	biaozhi	GM1360	EE1186631	04-07-2024	04-06-2025
Fully Anechoic Chamber	TDK	FAC-3	---	01-09-2024	01-08-2027
Cable line	Times	SFT205-NMSM-2.50M	394812-0001	---	---
Cable line	Times	SFT205-NMSM-2.50M	394812-0002	---	---
Cable line	Times	SFT205-NMSM-2.50M	394812-0003	---	---
Cable line	Times	SFT205-NMSM-2.50M	393495-0001	---	---
Cable line	Times	EMC104-NMNM-1000	SN160710	---	---
Cable line	Times	SFT205-NMSM-3.00M	394813-0001	---	---
Cable line	Times	SFT205-NMNM-1.50M	381964-0001	---	---
Cable line	Times	SFT205-NMSM-7.00M	394815-0001	---	---
Cable line	Times	HF160-KMKM-3.00M	393493-0001	---	---

7 Test results and Measurement Data

7.1 Antenna Requirement

Standard requirement:	47 CFR Part 15C Section 15.203 /247(c)
15.203 requirement: An intentional radiator shall be designed to ensure that no antenna other than that furnished by the responsible party shall be used with the device. The use of a permanently attached antenna or of an antenna that uses a unique coupling to the intentional radiator, the manufacturer may design the unit so that a broken antenna can be replaced by the user, but the use of a standard antenna jack or electrical connector is prohibited. 15.247(b) (4) requirement: The conducted output power limit specified in paragraph (b) of this section is based on the use of antennas with directional gains that do not exceed 6 dBi. Except as shown in paragraph (c) of this section, if transmitting antennas of directional gain greater than 6 dBi are used, the conducted output power from the intentional radiator shall be reduced below the stated values in paragraphs (b)(1), (b)(2), and (b)(3) of this section, as appropriate, by the amount in dB that the directional gain of the antenna exceeds 6 dBi.	
EUT Antenna:	Please see Internal photos
The antenna is PCB antenna. The best case gain of the antenna is -2.34dBi.	

7.2 Maximum Conducted Output Power

Test Requirement:	47 CFR Part 15C Section 15.247 (b)(3)
Test Method:	ANSI C63.10 2013
Test Setup:	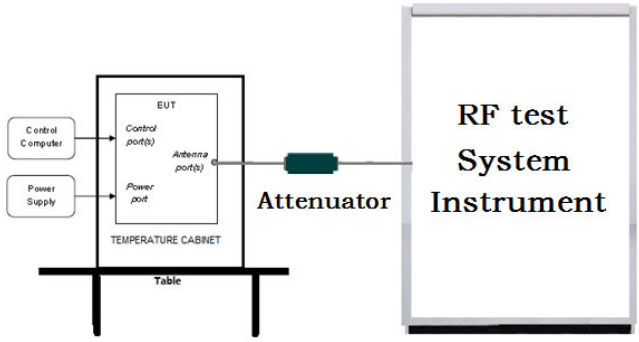 Remark: Offset=Cable loss+ attenuation factor.
Test Procedure:	a) Set the RBW ⩾ DTS bandwidth. b) Set VBW ⩾ 3 × RBW. c) Set span ⩾ 3 x RBW d) Sweep time = auto couple. e) Detector = peak. f) Trace mode = max hold. g) Allow trace to fully stabilize. h) Use peak marker function to determine the peak amplitude level.
Limit:	30dBm
Test Mode:	Refer to clause 5.3
Test Results:	Refer to Appendix Bluetooth LE

7.3 DTS Bandwidth

Test Requirement:	47 CFR Part 15C Section 15.247 (a)(2)
Test Method:	ANSI C63.10 2013
Test Setup:	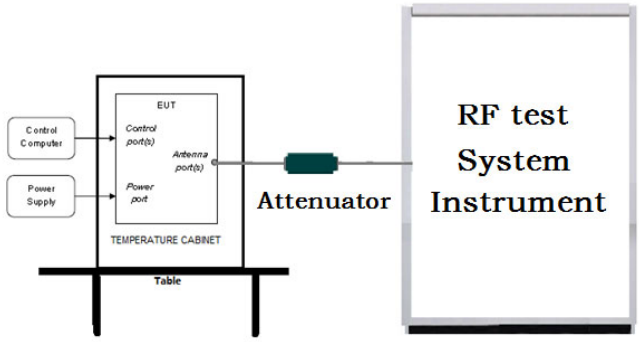 Remark: Offset=Cable loss+ attenuation factor.
Test Procedure:	a) Set RBW = 100 kHz. b) Set the VBW ⩾[3 × RBW]. c) Detector = peak. d) Trace mode = max hold. e) Sweep = auto couple. f) Allow the trace to stabilize. g) Measure the maximum width of the emission that is constrained by the frequencies associated with the two outermost amplitude points (upper and lower frequencies) that are attenuated by 6 dB relative to the maximum level measured in the fundamental emission.
Limit:	≥ 500 kHz
Test Mode:	Refer to clause 5.3
Test Results:	Refer to Appendix Bluetooth LE

7.4 Maximum Power Spectral Density

Test Requirement:	47 CFR Part 15C Section 15.247 (e)
Test Method:	ANSI C63.10 2013
Test Setup:	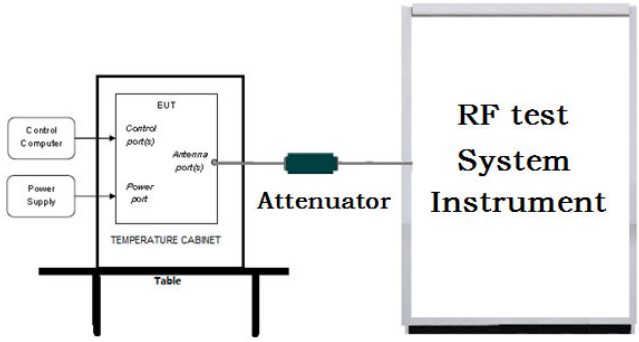 Remark: Offset=Cable loss+ attenuation factor.
Test Procedure:	a) Set analyzer center frequency to DTS channel center frequency. b) Set the span to 1.5 times the DTS bandwidth. c) Set the RBW to 3 kHz ＜ RBW ＜ 100 kHz. d) Set the VBW ＞ [3 × RBW]. e) Detector = peak. f) Sweep time = auto couple. g) Trace mode = max hold. h) Allow trace to fully stabilize. i) Use the peak marker function to determine the maximum amplitude level within the RBW. j) If measured value exceeds requirement, then reduce RBW (but no less than 3 kHz) and repeat.
Limit:	≤8.00dBm/3kHz
Test Mode:	Refer to clause 5.3
Test Results:	Refer to Appendix Bluetooth LE

7.5 Band Edge measurements and Conducted Spurious Emission

Test Requirement:	47 CFR Part 15C Section 15.247 (d)
Test Method:	ANSI C63.10 2013
Test Setup:	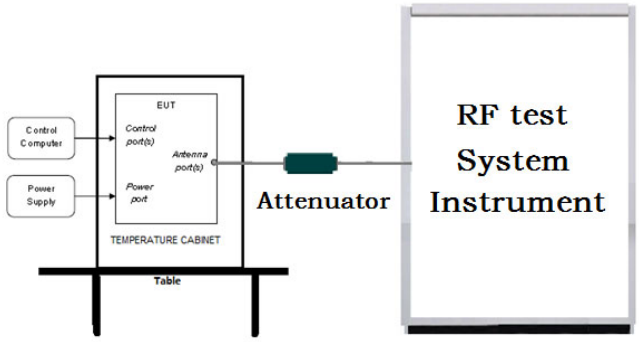 Remark: Offset=Cable loss+ attenuation factor.
Test Procedure:	a) Set RBW =100KHz. b) Set VBW = 300KHz. c) Sweep time = auto couple. d) Detector = peak. e) Trace mode = max hold. f) Allow trace to fully stabilize. g) Use peak marker function to determine the peak amplitude level.
Limit:	In any 100 kHz bandwidth outside the frequency band in which the spread spectrum intentional radiator is operating, the radio frequency power that is produced by the intentional radiator shall be at least 20 dB below that in the 100 kHz bandwidth within the band that contains the highest level of the desired power, based on either an RF conducted or a radiated measurement.
Test Mode:	Refer to clause 5.3
Test Results:	Refer to Appendix Bluetooth LE

7.6 Radiated Spurious Emission & Restricted bands

Test Requirement:	47 CFR Part 15C Section 15.209 and 15.205
Test Method:	ANSI C63.10 2013
Test Site:	Measurement Distance: 3m (Semi-Anechoic Chamber)
Receiver Setup:	

Frequency	Detector	RBW	VBW	Remark
0.009MHz-0.090MHz	Peak	10kHz	30kHz	Peak
0.009MHz-0.090MHz	Average	10kHz	30kHz	Average
0.090MHz-0.110MHz	Quasi-peak	10kHz	30kHz	Quasi-peak
0.110MHz-0.490MHz	Peak	10kHz	30kHz	Peak
0.110MHz-0.490MHz	Average	10kHz	30kHz	Average
0.490MHz -30MHz	Quasi-peak	10kHz	30kHz	Quasi-peak
30MHz-1GHz	Quasi-peak	100 kHz	300kHz	Quasi-peak
Above 1GHz	Peak	1MHz	3MHz	Peak
	Peak	1MHz	10kHz	Average

Limit:

Frequency	Field strength (microvolt/meter)	Limit (dBuV/m)	Remark	Measurement distance (m)
0.009MHz-0.490MHz	2400/F(kHz)	-	-	300
0.490MHz-1.705MHz	24000/F(kHz)	-	-	30
1.705MHz-30MHz	30	-	-	30
30MHz-88MHz	100	40.0	Quasi-peak	3
88MHz-216MHz	150	43.5	Quasi-peak	3
216MHz-960MHz	200	46.0	Quasi-peak	3
960MHz-1GHz	500	54.0	Quasi-peak	3
Above 1GHz	500	54.0	Average	3

Note: 15.35(b), Unless otherwise specified, the limit on peak radio frequency emissions is 20dB above the maximum permitted average emission limit applicable to the equipment under test. This peak limit applies to the total peak emission level radiated by the device.

Test Setup:	

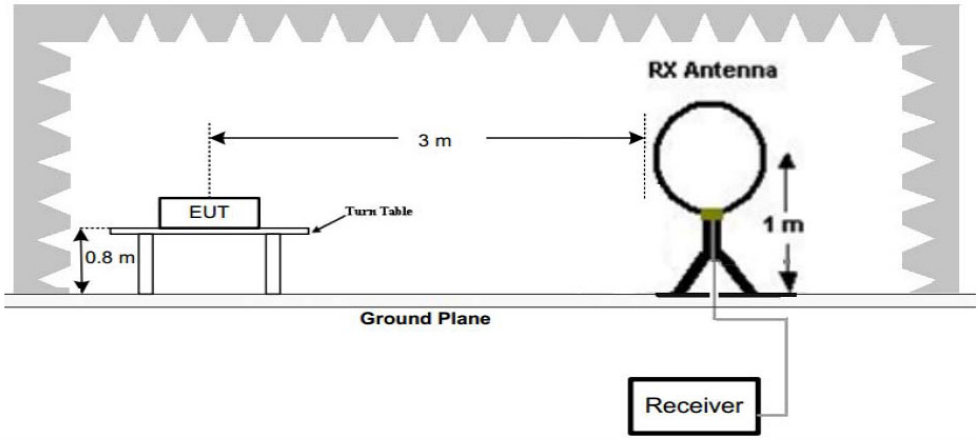

Figure 1. Below 30MHz

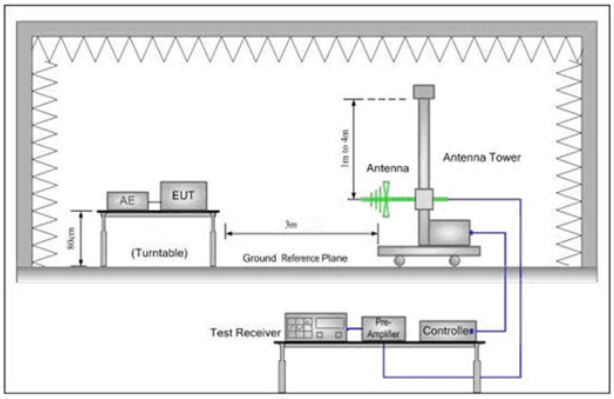

Figure 2. 30MHz to 1GHz

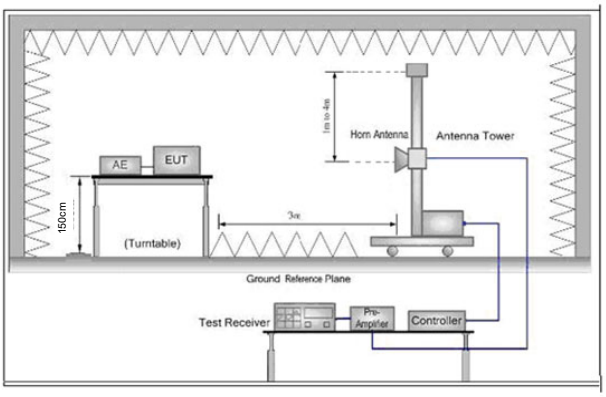

Figure 3. Above 1 GHz

Test Procedure:	a. 1) Below 1G: The EUT was placed on the top of a rotating table 0.8 meters above the ground at a 3 meter semi-anechoic camber. The table was rotated 360 degrees to determine the position of the highest radiation. 2) Above 1G: The EUT was placed on the top of a rotating table 1.5 meters above the ground at a 3 meter semi-anechoic camber. The table was rotated 360 degrees to determine the position of the highest radiation. Note: For the radiated emission test above 1GHz: Place the measurement antenna away from each area of the EUT determined to be a source of emissions at the specified measurement distance, while keeping the measurement antenna aimed at the source of emissions at each frequency of significant emissions, with polarization oriented for maximum response. The measurement antenna may have to be higher or lower than the EUT, depending on the radiation pattern of the emission and staying aimed at the emission source for receiving the maximum signal. The final measurement antenna elevation shall be that which maximizes the emissions. The measurement antenna elevation for maximum emissions shall be restricted to a range of heights of from 1 m to 4 m above the ground or reference ground plane. b. The EUT was set 3 meters away from the interference-receiving antenna, which was mounted on the top of a variable-height antenna tower. c. The antenna height is varied from one meter to four meters above the ground to determine the maximum value of the field strength. Both

	horizontal and vertical polarizations of the antenna are set to make the measurement. d. For each suspected emission, the EUT was arranged to its worst case and then the antenna was tuned to heights from 1 meter to 4 meters (for the test frequency of below 30MHz, the antenna was tuned to heights 1 meter) and the rotatable table was turned from 0 degrees to 360 degrees to find the maximum reading. e. The test-receiver system was set to Peak Detect Function and Specified Bandwidth with Maximum Hold Mode. f. If the emission level of the EUT in peak mode was 10dB lower than the limit specified, then testing could be stopped and the peak values of the EUT would be reported. Otherwise the emissions that did not have 10dB margin would be re-tested one by one using peak, quasi-peak or average method as specified and then reported in a data sheet. g. Test the EUT in the lowest channel (2402MHz),the middle channel (2440MHz),the Highest channel (2480MHz) h. The radiation measurements are performed in X, Y, Z axis positioning for Transmitting mode, and found the X axis positioning which it is the worst case. i. Repeat above procedures until all frequencies measured was complete.
Test Mode:	Refer to clause 5.3
Test Results:	Pass

Radiated Spurious Emission below 1GHz:

During the test, the Radiates Emission from 30MHz to 1GHz was performed in all modes, only the worst case highest channel of GFSK 1M was recorded in the report.

Horizontal:

Test Graph

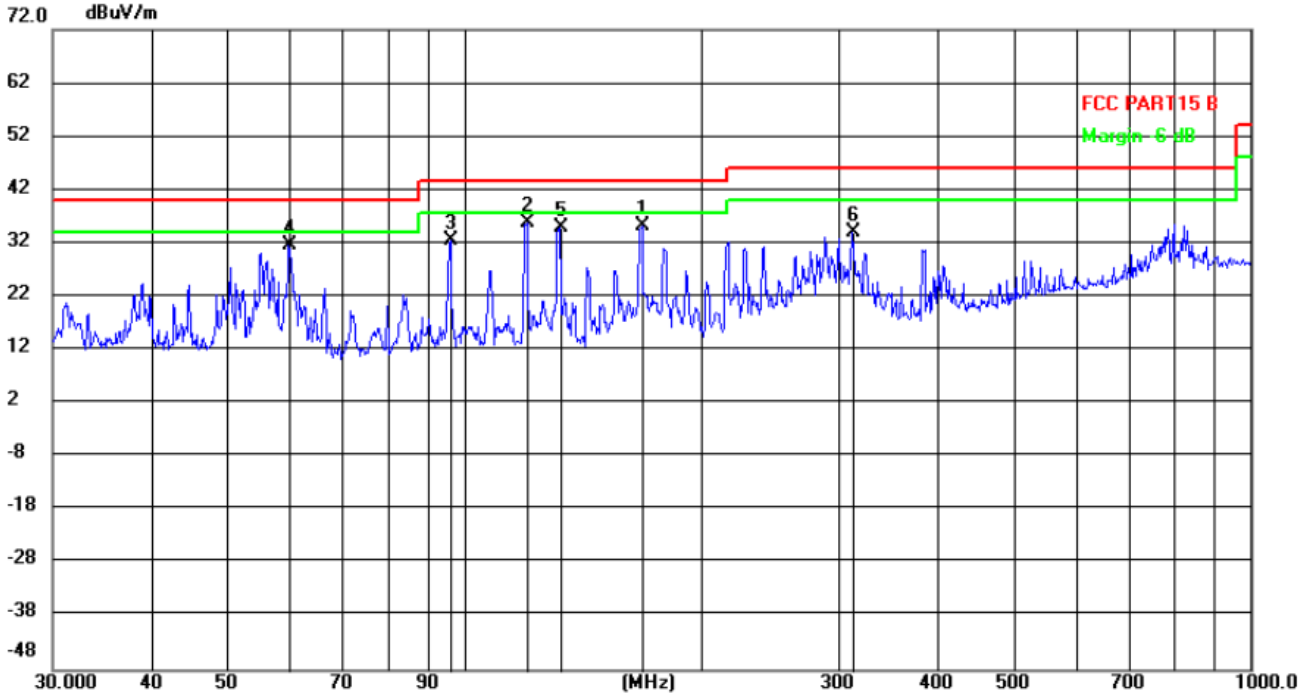

No.	Mk.	Freq.	Reading Level	Correct Factor	Measure-ment	Limit	Margin		Antenna Height	Table Degree	
		MHz	dBuV	dB/m	dBuV/m	dBuV/m	dB	Detector	cm	degree	Comment
1		168.5614	23.81	11.51	35.32	43.50	-8.18	QP	200	177	
2	*	120.4243	24.21	11.73	35.94	43.50	-7.56	QP	200	156	
3		96.3516	19.62	13.00	32.62	43.50	-10.88	QP	200	18	
4		59.9218	18.29	13.28	31.57	40.00	-8.43	QP	200	113	
5		132.4757	25.06	9.96	35.02	43.50	-8.48	QP	200	135	
6		311.8511	17.06	16.90	33.96	46.00	-12.04	QP	100	310	

Vertical:

Test Graph

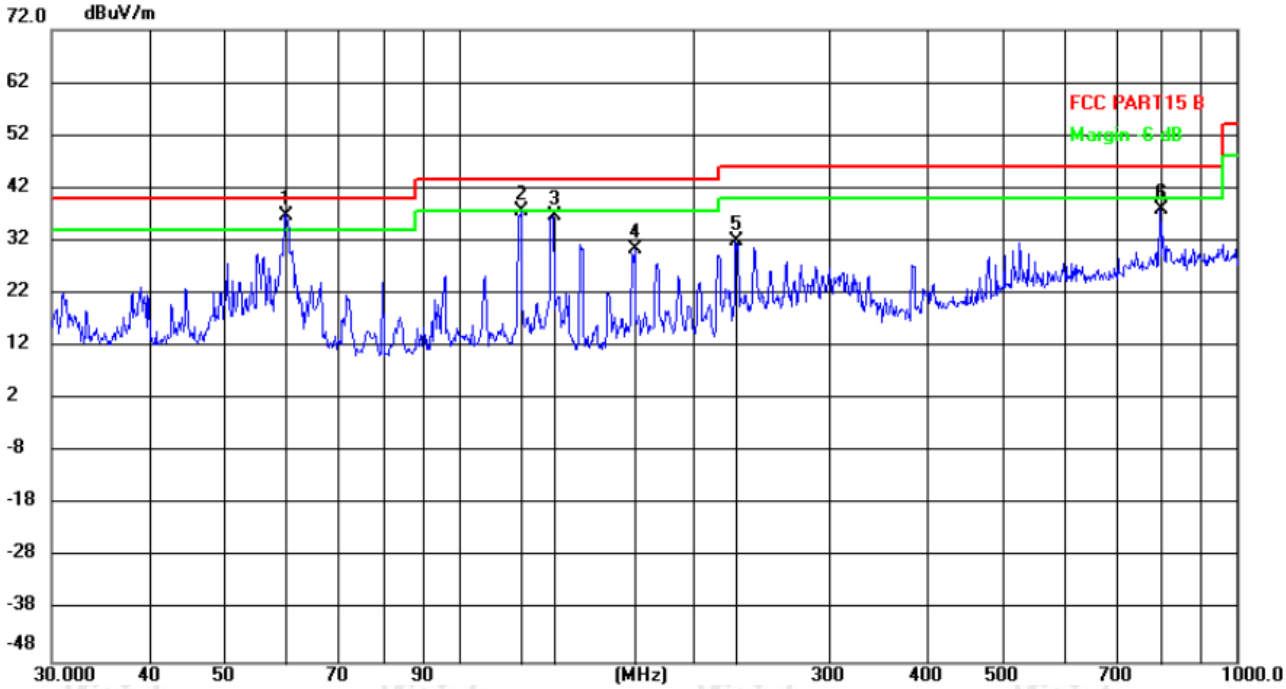

No.	Mk.	Freq.	Reading Level	Correct Factor	Measure-ment	Limit	Margin		Antenna Height	Table Degree	
		MHz	dBuV	dB/m	dBuV/m	dBuV/m	dB	Detector	cm	degree	Comment
1	*	59.8903	23.62	13.28	36.90	40.00	-3.10	QP	100	240	
2	!	120.3821	25.91	11.74	37.65	43.50	-5.85	QP	100	222	
3		132.4061	26.73	9.96	36.69	43.50	-6.81	QP	100	312	
4		168.5319	19.07	11.51	30.58	43.50	-12.92	QP	100	38	
5		227.6906	18.19	13.80	31.99	46.00	-14.01	QP	100	179	
6		798.8396	12.06	25.81	37.87	46.00	-8.13	QP	200	34	

Radiated Spurious Emission above 1GHz:

Mode:			BLE GFSK Transmitting			Channel:		2402 MHz	
NO	Freq. [MHz]	Factor [dB]	Reading [dBμV]	Level [dBμV/m]	Limit [dBμV/m]	Margin [dB]	Result	Polarity	Remark
1	1241.0241	7.88	37.87	45.75	74.00	28.25	Pass	H	PK
2	1924.0924	8.97	36.64	45.61	74.00	28.39	Pass	H	PK
3	3186.0124	-18.56	56.09	37.53	74.00	36.47	Pass	H	PK
4	4805.1203	-13.44	52.87	39.43	74.00	34.57	Pass	H	PK
5	7811.3208	-3.94	48.08	44.14	74.00	29.86	Pass	H	PK
6	13748.7166	4.61	42.05	46.66	74.00	27.34	Pass	H	PK
7	1256.4256	7.84	38.29	46.13	74.00	27.87	Pass	V	PK
8	1741.0741	8.49	38.49	46.98	74.00	27.02	Pass	V	PK
9	4335.089	-15.11	55.24	40.13	74.00	33.87	Pass	V	PK
10	4804.1203	-13.44	52.73	39.29	74.00	34.71	Pass	V	PK
11	7254.2836	-7.27	47.50	40.23	74.00	33.77	Pass	V	PK
12	14290.7527	6.44	40.03	46.47	74.00	27.53	Pass	V	PK

Mode:			BLE GFSK Transmitting			Channel:		2440 MHz	
NO	Freq. [MHz]	Factor [dB]	Reading [dBμV]	Level [dBμV/m]	Limit [dBμV/m]	Margin [dB]	Result	Polarity	Remark
1	1211.6212	7.97	37.58	45.55	74.00	28.45	Pass	H	PK
2	1891.2891	8.92	36.99	45.91	74.00	28.09	Pass	H	PK
3	3197.0131	-18.51	56.47	37.96	74.00	36.04	Pass	H	PK
4	4335.089	-15.11	56.11	41.00	74.00	33.00	Pass	H	PK
5	8754.3836	-3.02	44.85	41.83	74.00	32.17	Pass	H	PK
6	13733.7156	4.75	41.88	46.63	74.00	27.37	Pass	H	PK
7	1247.2247	7.87	38.15	46.02	74.00	27.98	Pass	V	PK
8	2078.9079	9.43	36.56	45.99	74.00	28.01	Pass	V	PK
9	4336.0891	-15.11	57.50	42.39	74.00	31.61	Pass	V	PK
10	4881.1254	-13.47	51.63	38.16	74.00	35.84	Pass	V	PK
11	8102.3402	-2.78	45.39	42.61	74.00	31.39	Pass	V	PK
12	13791.7194	4.20	43.17	47.37	74.00	26.63	Pass	V	PK

Mode:			BLE GFSK Transmitting			Channel:		2480 MHz	
NO	Freq. [MHz]	Factor [dB]	Reading [dBμV]	Level [dBμV/m]	Limit [dBμV/m]	Margin [dB]	Result	Polarity	Remark
1	1188.2188	7.87	38.44	46.31	74.00	27.69	Pass	H	PK
2	1929.4929	8.97	36.74	45.71	74.00	28.29	Pass	H	PK
3	3198.0132	-18.51	57.89	39.38	74.00	34.62	Pass	H	PK
4	4336.0891	-15.11	55.18	40.07	74.00	33.93	Pass	H	PK
5	7801.3201	-3.94	47.04	43.10	74.00	30.90	Pass	H	PK
6	12399.6266	0.13	46.10	46.23	74.00	27.77	Pass	H	PK
7	1195.4195	7.95	37.56	45.51	74.00	28.49	Pass	V	PK
8	1984.0984	8.99	38.25	47.24	74.00	26.76	Pass	V	PK
9	3343.0229	-18.13	54.30	36.17	74.00	37.83	Pass	V	PK
10	4960.1307	-13.35	52.81	39.46	74.00	34.54	Pass	V	PK
11	7783.3189	-4.11	46.49	42.38	74.00	31.62	Pass	V	PK
12	12398.6266	0.13	46.35	46.48	74.00	27.52	Pass	V	PK

Remark:

1) The field strength is calculated by adding the Antenna Factor, Cable Factor & Preamplifier. The basic equation with a sample calculation is as follows:

   Final Test Level =Receiver Reading + Antenna Factor + Cable Factor – Preamplifier Factor

2) Scan from 9kHz to 25GHz, the disturbance above 10GHz and below 30MHz was very low. As shown in this section, for frequencies above 1GHz, the field strength limits are based on average limits. However, the peak field strength of any emission shall not exceed the maximum permitted average limits specified above by more than 20 dB under any condition of modulation. So, only the peak measurements were shown in the report.

Restricted bands:

Test plot as follows:

Test_Mode	BLE 1M GFSK Transmitting	Test_Frequency	2402
Tset_Engineer	Aiden.wang	Test_Date	2024/07/13
Remark	\		

Test Graph

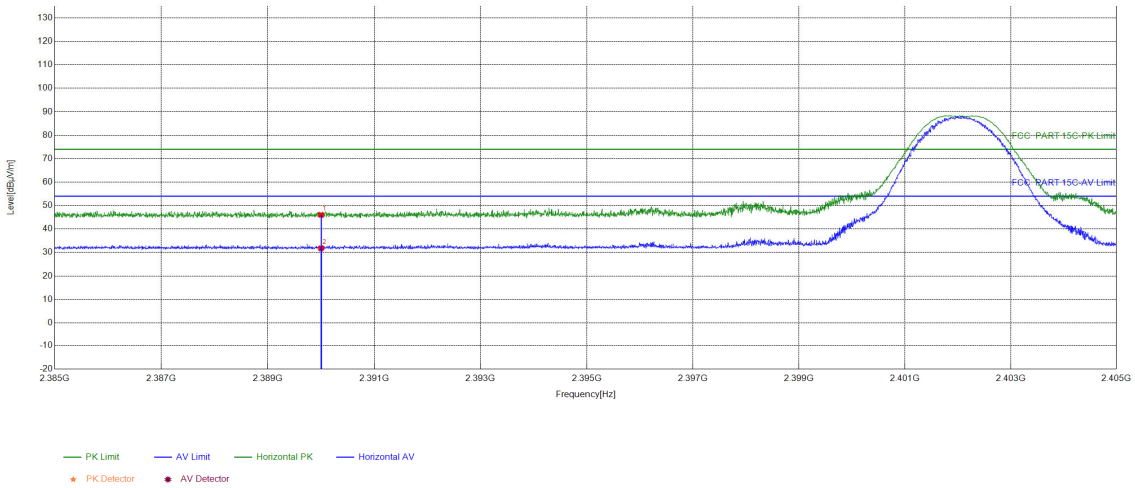

Suspected List									
NO	Freq. [MHz]	Factor [dB]	Reading [dBμV]	Level [dBμV/m]	Limit [dBμV/m]	Margin [dB]	Result	Polarity	Remark
1	2390	9.96	36.07	46.03	74.00	27.97	PASS	Horizontal	PK
2	2390	9.96	21.82	31.78	54.00	22.22	PASS	Horizontal	AV

Test_Mode	BLE 1M GFSK Transmitting	Test_Frequency	2402
Tset_Engineer	Aiden.wang	Test_Date	2024/07/13
Remark	\		

Test Graph

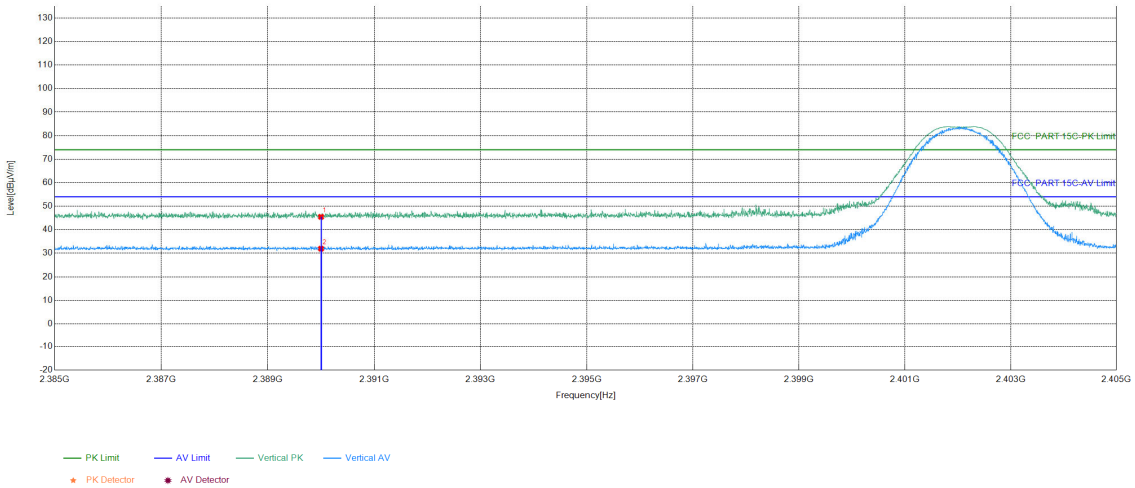

Suspected List									
NO	Freq. [MHz]	Factor [dB]	Reading [dBμV]	Level [dBμV/m]	Limit [dBμV/m]	Margin [dB]	Result	Polarity	Remark
1	2390	9.96	35.52	45.48	74.00	28.52	PASS	Vertical	PK
2	2390	9.96	21.99	31.95	54.00	22.05	PASS	Vertical	AV

Test_Mode	BLE 1M GFSK Transmitting	Test_Frequency	2480
Tset_Engineer	Aiden.wang	Test_Date	2024/07/13
Remark	\		

Test Graph

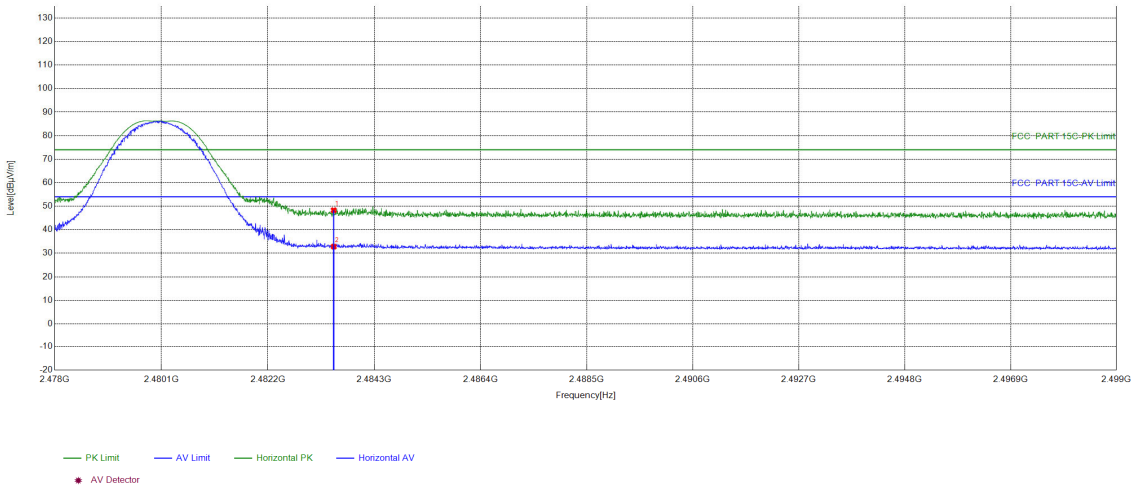

Suspected List									
NO	Freq. [MHz]	Factor [dB]	Reading [dBµV]	Level [dBµV/m]	Limit [dBµV/m]	Margin [dB]	Result	Polarity	Remark
1	2483.5	10.38	37.92	48.30	74.00	25.70	PASS	Horizontal	PK
2	2483.5	10.38	22.45	32.83	54.00	21.17	PASS	Horizontal	AV

Test_Mode	BLE 1M GFSK Transmitting	Test_Frequency	2480
Tset_Engineer	Aiden.wang	Test_Date	2024/07/13
Remark	\		

Test Graph

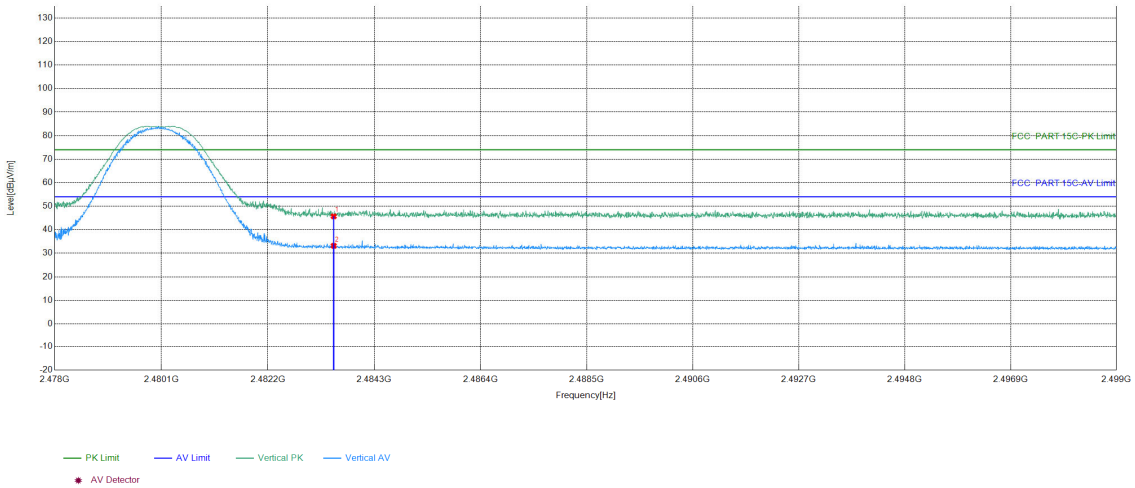

Suspected List									
NO	Freq. [MHz]	Factor [dB]	Reading [dBµV]	Level [dBµV/m]	Limit [dBµV/m]	Margin [dB]	Result	Polarity	Remark
1	2483.5	10.38	35.32	45.70	74.00	28.30	PASS	Vertical	PK
2	2483.5	10.38	22.79	33.17	54.00	20.83	PASS	Vertical	AV

Note:
The field strength is calculated by adding the Antenna Factor, Cable Factor & Preamplifier. The basic equation with a sample calculation is as follows:
Final Test Level =Receiver Reading -Correct Factor

Correct Factor = Preamplifier Factor– Antenna Factor–Cable Factor

8 Appendix Bluetooth LE

Refer to Appendix: Bluetooth LE of EED32Q80776501