User Manual

Contents

1. Welcome 1
2. Warnings 2
3. Packing List 4
4. Assembly 5
5. Preparation 6
6. Riding 7
7. Operation 8
8. App 9
9. Charging 10
10. Folding 11
11. Unfolding 12
12. Maintenance 13
13. Fault 16
14. Authentication 17
15. Contact us 19

1.Welcome

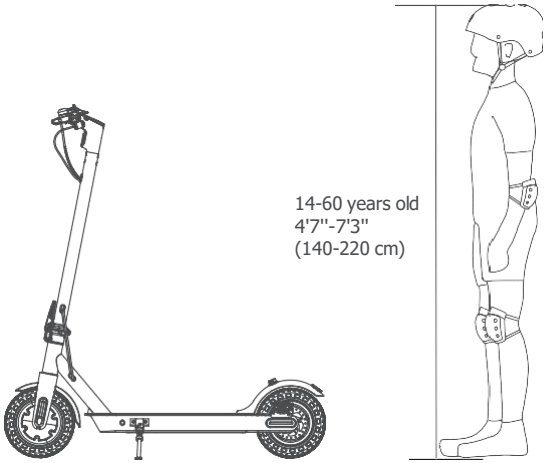

Welcome to choose this electric scooter.
Please do not ride it until you understand the performance of this product!
All images in this manual are for reference only.
Different versions may be available in different regions, so please refer to the actual product!

2. Warnings

1. This electric scooter can be used by one adult only.Never carry others.
2. Operators always shall use appropriate protective clothing, including bted to a helmet, with appropriate certification, and any other equipment recommended by the manuer.
3. The user shall adhere to all manufacturer's recommendationss and instructions, as well as comply with all laws and ordinances.
4. Please practice in an open area (not on lanes) first and use this product until you are skilled in operation.
5. Do not make dangerous actions or ride with one hand only. Keep your feet on the scooter.
6. Avoid obstacle jumps and anticipate and adapt your trajectory and speed to those of a pedestrian before crossing these obstacles. Meanwhile, get out of the vehicle when these obstacles become dangerous due to their shape, height or slippage. Do not try to directly pass steps are higher than 1.2inch(3cm).
7. If you use this product at night, turn on the headlight and control the speed to 10mph(16km/h) or less.
8. Do not use this product at the ambient temperature below -20°C.Temperature range of charging and cycling environment:0~45°C.
9. In the event of bumps or poor road conditions,please use this scooter slowly or get off the scooter and push it forward.
10. Do not use this product on an oily or icy surface.
11. To avoid damage caused by water to its electrical parts,Please Do not immerse this product at a depth of more than 1.57inch(4cm) in water.
12. Avoid using this product as much as possible in bad weather such as rain, snow and wind, to prevent unnecessary damage caused by insignificant factors.
13. Use this product in accordance with relevant instructions in this manual. Do not use this product beyond the allowable load range.
14. Avoid using or keeping this product at high or extremely low temperatures, or keeping this product together with flammables.
15. The scooter is a special riding product. Please ride it on smooth roads without pits.
16. Do not attach any load to the handlebar which will affect the stability of the vehicle.
17. Engage the kickstand when the vehicle is not in use;Flip up the kickstand before use; Do not park the vehicle on the slope.
18. The minimun height of the user is 55 inch(1.4m),while the maximun height is no more than 86.6 inch (2.2m); the maximun age of the user is 60 years old,while the minimun age is no less than 14 years old.
19. Braking performance and friction between the tire and road deteriorates in wet conditions, so it is harder to control the speed and easier to lose control. Slow down and brake early when it is raining.

20. WARNING Keep plastic covering away from children to avoid suffocation.
21. The user needs to take time to learn basic use practices to avoid any serious accident that can occur during the initial learning stage of use.
22. Notify your presence when approaching a pedestrian or cyclist when you are not seen or heard. Avoid high traffic areas or overcrowded areas. Owners shall be encouraged to highlight (for conspicuity)using lighting, reflectors, and for low-riding products, signal flags on flexible poles.
23. Cross the protected passages while walking.In all cases, take care of yourself and others.
24. Do not divert the use of the vehicle, This vehicle is not intended for acrobatic use.
25.Caution ! The wheel motor may become hot during operation, avoid touching.
26. Eliminate any sharp edges caused by use. Do not modify or transform the vehicle, including the steering tube and sleeve, stem, folding mechanism and rear brake. Components shall be maintained and repaired in accor-dance with the manufacturer's specifications and using only the manufacturer's authorized replacement parts with installation performed by dealers orother skilled persons.
27. The user has the obligation to always wear shoes when riding the scooter.Do not touch moving parts! Keep hands, feet, hair, body parts,cleothing, or similar articles away from wheels, or drivetrain, while the engine is running.
28. Anticipate your path and speed. Follow road and sidewalk rules, and obey all local laws when riding. Ride responsibly.Respect traffc rules, sidewalk codes, and local regulations.Always control your speed and follow the rules.Observe all local laws while riding.
29. Caution: Persons with the following conditions shall becautioned not to operate!
Those with heart conditions. Pregnant women.Persons with head, back, or neck ailments, or prior surgeries to thhose areas of the body.Persons with any mental or physical conditions that may make them susceptible to injury orimpair their physical dexterity or mental capabilities to recognize, understand, and performall of the s afety instructions and to be able to assume the hazards inherent in product use.
30. Devices are not intended for use at elevations greater than 2000 m above sea level.Prolonged Exposure to UV Rays, Rain and the Elements May Damage the Enclosure Materials,Store Indoors When Not in Use.
31. WARNING-Risk of Fire- No User Serviceable Parts.
AVERTISSEMENT - Risque d'incendie - Aucune des pièces ne peut être réparée par l'utilisateur.
32. WARNING - Risk of Fire and Electric Shock - Battery and/or battery components are not user replaceable.
AVERTISSEMENT - Risque d'incendie et de décharge électrique - Les batteries ou leurs composantsne peuvent pas être remplacés par l'utilisateur.

3. Packing List

User Manual

M5*12 Screw*6

Screwdriver

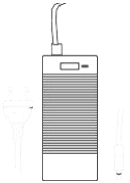

Power Cable

Note! Power adapter in different regions may have different versions.

4. Assembly

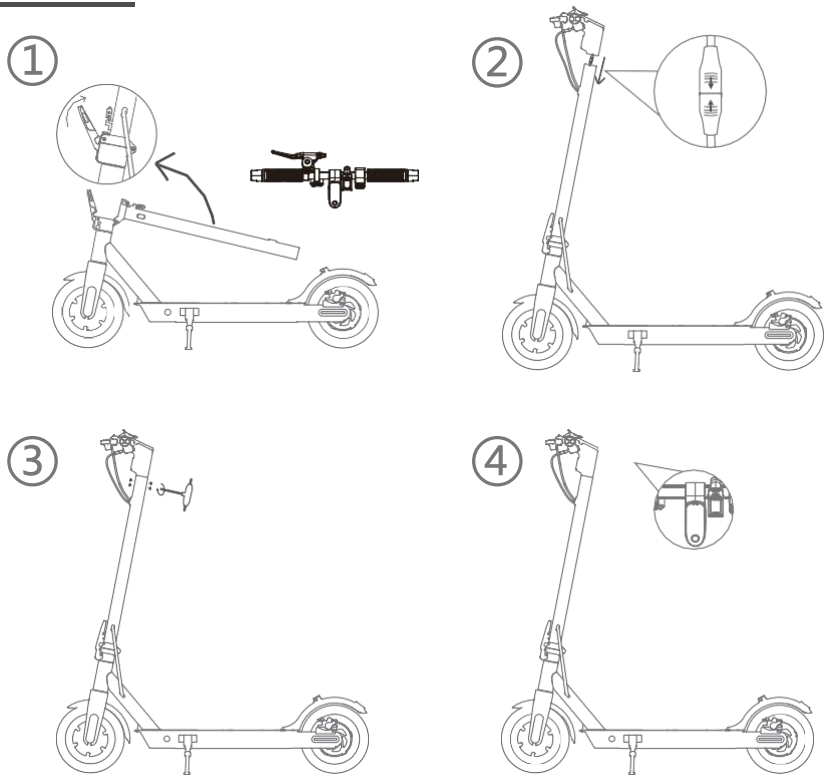

5. Preparation

1. Select an appropriate riding place.
2. Unfold the scooter according to the unfolding instructions andd wear protective equipment.
3. Before each cycle of operation, it is necessary to perform the pre-opeeraation checks as below:

That all guards and pads originally supplied by the manufacturer are inproper place and in serviceable condition.
That all safety labels are in place and understood by the operatoprand any passenger.
That any and all axle guards, chain guards, or other covers or guards suupplied by the manufacturer are in place and in serviceable condition.
That tires are ingood condition, inflated properly,and have suffcient tad remaining.

Preparation for riding

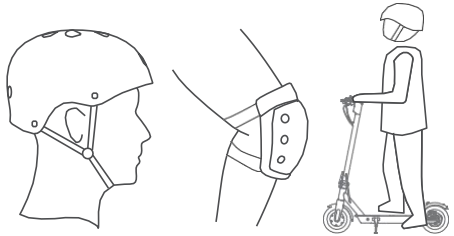

6.Riding

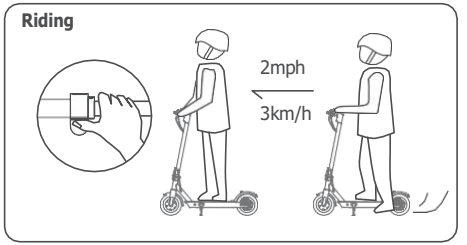

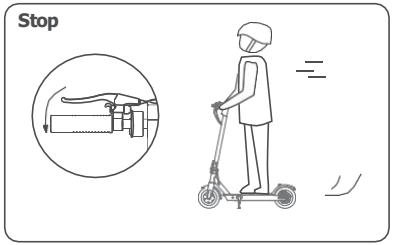

Pay attention

1. For safety, the factory setting of scooter is non-zero start, you need to slide the scooter to 3km/h(about 2mph), and the throttle can be used normally.
2. Can't start riding when charging.
3. Under normal circumstances, do not use emergency braking vigorously during high-speed driving, so as to avoidthe riding risk or damage to the rear wheel. The company is not responsible for the damage.

7.Operation

Power Switch

Short press to turn on, long press to turn off;
Press the button once to turn on the headlight; Double press the button to shift the gear mode; Press the switch key three times continuously to switch the speed unit.

Gear Setting

Quickly press the power key twice to switch gears. Gears can be set to pedestrian mode, ECO mode, D mode and S mode.

Speed Control

When riding the scooter at a speed faster than 2 mph(3km/h), the throttle will get started and take effect. By pressing the throttle, the user can control the riding speed.

Brake Control

Hold the left brake handle. The greater the pressure, the greater the braking force.

LED Headlight

After the scooter is turned on, the single power switch turns on/off the front lights.

Turn signal control

Turn signal button function: Short press the left/right button to turn the left/right turn signal on/off.

Speed Unit Switching

After opening the vehicle, press the switch key three times continuously to switch the speed unit.

Cruise Mode

Press and hold the throttle at the same speed for 5 seconds to activate cruise control mode. Cruise mode can be turned off by braking or re-pressing the throttle.(The cruise control function is activated by default, which can be turned off by pressing the button five times continuously or operated in the mobile APP.Note！This feature is only available on the US version.)

Zero Start：

This function is off by default, which can be activated by pressing the button four times continuously or operated in the mobile APP. After activation, you need to squeeze the brake once to start the vehicle.Note！This feature is only available on the US version.

8.App

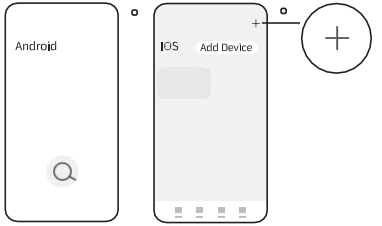

EN:Scan the QR code to download the app and register/log in.
Tap "+" on the upper right or Search Devices button in the mid-lower section to add your scooter.
Note! Please ensure your Bluetooth and scooter are on before connnection；Please make sure the APP is the latest version.

9.Charging

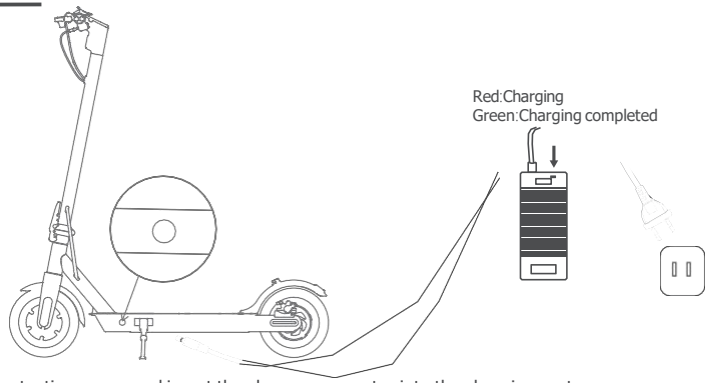

1. Remove the protective cover, and insert the charger connector into the charging port.
2. Insert the power plug ofthe charger into the power socket.
3. When the charger indicator is red, it indicates that the battery is being charged.When the charger indicator turns green, it indicates that the battery has been fully charged.
4. Requirement to power-off the vehicle during charging, or into a certain non-operational mode.
5. Charging temperature of the electric scooter is 0~45°C.

Note:

1. Do not use other models or brands of batteries, as it may pose a safety risk.
2. Avoid touching the battery contacts, disassembling, or puncturing the casing. Avoid metal objects contacting the battery contacts to prevent short circuits. This could cause damage to the battery or injury.
3. Improper disposal of used batteries can severely pollute the environment. Discard the battery pack according to local regulations. Do not dispose of this battery arbitrarily, let's protect our environment together.
4. Do not place the battery in a high temperature above 55°C or a low temperature below -20°C environment (for example, do not leave the scooter or its battery in a car exposed to the sun in summer), and do not throw the battery into fire, as it may lead to battery failure, overheating, or even fire risk.
5. Only use the original charger for charging, otherwise, there is a risk of damage or fire.
6. Do not disassemble the charger casing by yourself. Avoid touching the interface contacts with metal objects when powered on, as it may cause electric shock or charger damage, and such damage is not covered by the warranty.

10.Folding

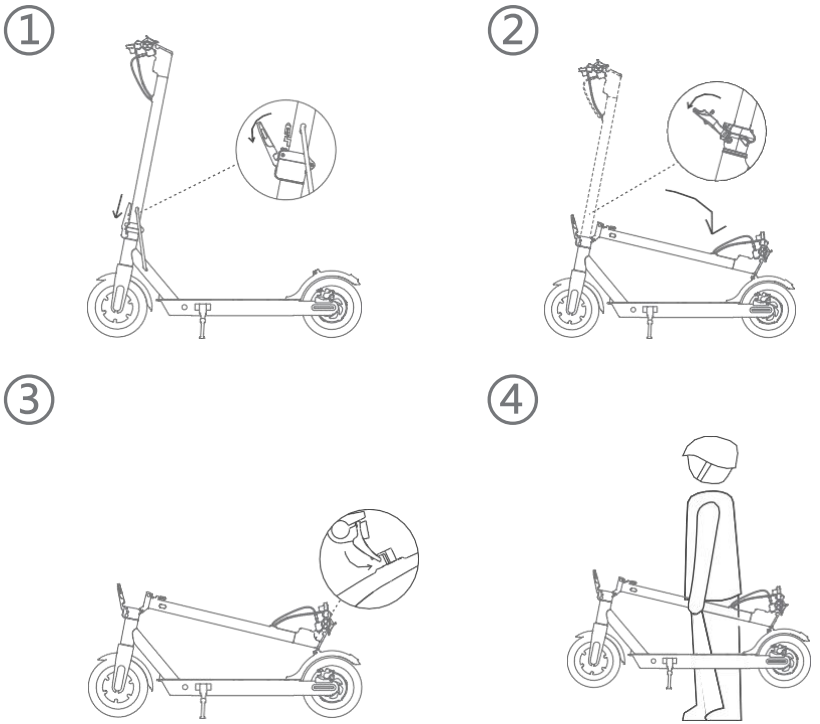

11. Unfolding

①

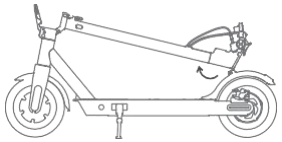

②

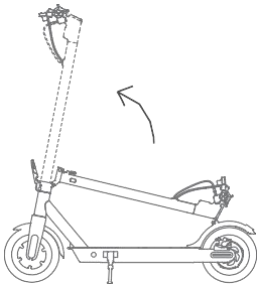

③

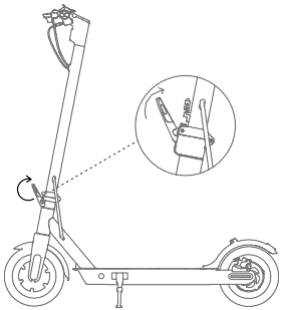

④

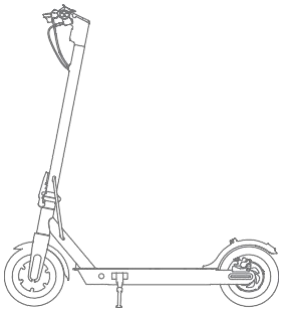

12. Maintenance

Cleaning and Storage

Regularly check all functional parts like the frame, handlebar, tires and make sure the steering system is well adjusted. Ensure that all locking devices are engaged.

Frame Inspection Procedure

- Inspect the frame and welds for cracks, deformation, or corrosion every 3 months or after 500 km of use.
- Check the folding hinge and locking mechanism for play or looseness. Tighten fasteners to manufacturer's specified torque (e.g., M8 bolt = 25 N.m).
- Grasp the handlebar and rear fork and gently rock the structure to detect looseness. If movement is felt, re-torque fasteners before riding.
- Ensure the deck and main frame joint are secure and free of abnormal sounds.

If any fracture, corrosion, or serious wear is found, stop using the scooter immediately and contact service personnel.

Wipe the main frame clean with a soft damp cloth. If there are stubborn stains, apply toothpaste and scrub repeatedly with a toothbrush, then clean with a soft damp cloth. If there are scratches on the plastic part of the body, they can be polished with fine sandpaper.

To prevent jamming to the wheels, wheel bearings, or brakes, please clean and check the drive wheels, auxiliary wheels, and their associated components such as bearings for dirt and other foreign objects. Lubricate both sides of the bearing with lubricating oil or machine oil. If the problem still exists, please contact customer service.

Lubrication Points and Intervals

- **Folding mechanism pivot and locking latch:** Apply Lithium-based grease (NLGI No. 2) every 3 months.
- **Steering column bearings:** Lubricate every 6 months or after 1,000 km with Multipurpose EP2 grease.
- **Rear hub motor bearings:** Clean and re-lubricate if abnormal noise or increased resistance is observed using Water-resistant high-temperature bearing grease.
- **Brake cable ends**: Apply a few drops of Light machine oil (SAE 10W) every 3 months.

⚠Do not use spray lubricants containing solvents on plastic or rubber parts.

Tips

Do not use alcohol, gasoline, kerosene, or other corrosive, volatile solvents to clean your scooter. These substances may damage the appearance and internal structure of the scooter. Do not use pressure washers or hose sprays.

Warning

Before cleaning, make sure the scooter is turned off and the charging cable has been unplugged, and the rubber cap of the charging port is tightly fastened, otherwise, it may damage the electronic components. When not in use, store the scooter in a cool, dry place. Do not leave the scooter outdoors for extended periods. Sun exposure and extreme temperature conditions (overheating and overcooling) will accelerate the aging of plastic parts and may reduce battery life.

Battery Maintenance

When storing or charging the battery, do not exceed the specified temperature limit (please refer to the model parameter table). Do not puncture the battery. Please refer to the laws and regulations in your area regarding battery recycling and/or disposal.

Maintaining a well-maintained battery can keep it running well even after many miles of travel. Please charge the battery after each ride and avoid completely depleting the battery. At normal temperatures of 22C, the battery's endurance and performance are optimal. However, when used in conditions below 0C, the battery's endurance and performance may decline. Generally speaking, the same battery at -20C has only half the endurance and performance of 22C. The battery's endurance will recover as the temperature rises.

Drive System Maintenance Instructions

- **Drive Type:** Direct-drive brushless DC hub motor (BLDC).
- **Inspection:** Check the motor and wheel for unusual noise or vibration every 500 km. If detected, verify the tightness of axle nuts and bearing condition.
- **Cleaning:** Wipe the motor and drive components with a dry or slightly damp cloth. Do not use a pressure washer or immerse in water.
- **Noise troubleshooting:** Inspect for brake system, foreign objects between motor shell and fender, or bearing damage. Replace defective bearings as needed.
- **Controller service:** The controller is factory-sealed and must not be disassembled by the user. If persistent overheating or power loss occurs, contact authorized service center.

Scooter Maintenance Schedule (Recommended)

Maintaining the scooter regularly can help keep the scooter neat and in good condition, avoid safety hazards, minimize breakdowns, slow down the deterioration of the scooter, and extend the scooter's service life.

Item	Service Object	Actions	Every month	Every 3 months	Every 310.7 miles (500 km)/ 6 months	Every 621.4 miles (1000 km)/1 year	Every 6213.7 miles (10000 km)/3 years
Tires	Tire Tread Wear	Check whether the tire is cracked, deformed, worn, etc.			√	√	√
Screws	Handlebar Assembly Screws	Tighten the screw that connects the handlebar assembly with the stem assembly (with the recommended torque of 3.0 ± 0.5 N·m).		√	√	√	√
		Tighten the accelerator screw (with the recommended torque of 1.6 ± 0.1 N·m).				√	√
		Tighten the brake lever screw (with the recommended torque of 5 ± 0.2 N·m).				√	√

Item	Service Object	Actions	Every month	Every 3 months	Every 310.7 miles (500 km)/ 6 months	Every 621.4 miles (1000 km)/ 1 year	Every 6213.7 miles (10000 km)/ 3 years
Functions	Brake Adjustment	Before adjusting, make sure the scooter is turned off and not charging. Tool: 6mm wrench (the tool needs to be prepared by the user). When the brake is too tight, use the tool to turn the nut on the screw rod counterclockwise, so as to slightly shorten the brake cable's exposed bottom part. When the brake is too loose, use the tool to turn the nut on the screw rod clockwise, so as to slightly lengthen the brake cable's exposed bottom part.			√	√	√
Functions	Charging	Charge the scooter at a suitable temperature. The indicator on the battery charger is red when the scooter is charging, and turns green when the scooter is fully charged. The control panel will show the charging status simultaneously during charging.			√	√	√
	Steering	Turn the handlebar 60° to the left and right to make sure the turning angle is correct and the steering is free from resistance and stagnation.				√	√
Important Components	Battery Assembly	Fully charge the scooter before leaving it unused for a long time, and turn it on to charge every 60 days.				√	√

13. Fault

If there is anything abnormal about the scooter, the warning indicator will flash with the following codes.

Codes	Describe	Maintenance and treatment
E1	Motor Hall anomaly	BOOT failure, Check that the motor Hall wiring is normal,Brake occurs, need to check the replacement of motor or controller to eliminate the problem.
E2	Throttle Hall anomaly	Check if the throttle is zero, the throttle line and the throttle are normal, Unplug the throttle cord and restart the car to troubleshoot the problem.
E3	Brake Hall anomaly	Check whether the brake will be reset to zero position, and the brake line and the brake will be normal. Can unplug the electronic brake wiring and restart the car to eliminate the problem.
E5	Bus high voltage	The main line voltage is too high, BOOT failure, need to check whether the battery voltage is normal, cycling failure, need to replace the battery or controller to remove the problem.
E6	Short circuit fault	Check if a short circuit is wired or installed, Or replace the controller to troubleshoot.
E7	Motor Overheated	The motor temperature is too high. Allow the vehicle to cool down before restarting. If restarting fails, replace the motor to resolve the issue.
E8	Instrument panel communication failed	Check the connection between the instrument panel and the Controller Assembly line is normal. Shut down the machine and restart the car after the connection of the assembly line is replugged.

14.Authentication

The product has passed the ANSI/CAN /UL-2272 certification of the CSA.
The battery complies with the UN/DOT 38.3.
According to the Federal Communications Commission (FCC) Compliance Statement as follows:
The product complies with part 15 of the FCC rules, and the operation must meet the following two conditions: (1) the product should not cause harmful interference, and (2) the product must accept any received interference, including interference that may lead to accidental operation. Any change or modification not expressly approved by the responsible party may make void the user's right to operate the product.

This product complies with the cybersecurity standard EN 18031.

The EU Compliance Statement is as follows:

WEEE needs to properly dispose of and recycle the product. This sign indicates that the product should not be disposed of together with other domestic waste throughout the EU.
Therefore, in order to prevent possible harm of uncontrolled waste treatment to the natural environment or human health, it is necessary to recycle it and promote the sustainable reuse of material resources. To recycle the used product, use the return and collection system or contact the retailer who can use the product for environmentally safe recycling.

EU Battery Recycling Information:

Batteries or battery compartments are marked in accordance with the European Directive 2006/66/EC and the amendment 2013/56/EU on batteries and accumulator cells and scrap batteries and accumulator cells.
The directive applies to the recycling framework of waste batteries and accumulator cells throughout the EU. The label on the battery indicates that the battery should not be discarded, but recycled at the end of its service life according to the

According to the European Directive 2006/66/EC and the amendment 2013/56/EU, batteries and accumulator cells are labeled to indicate that they will be collected separately and recycled at the end of their service life. The label on the battery may also contain the chemical symbols of the relevant metals in the battery (Pb, Hg and Cd). Users should not dispose of batteries and accumulator cells as garbage, but use the collection framework available to customers to recycle and dispose of batteries and accumulator cells. With the engagement of users, it is important to minimize any potential impact of batteries and accumulator cells on the environment and human health due to the presence of potentially hazardous substances.
Before placing electrical and electronic equipment (EEE) into a waste collection stream or waste collection facility, users of equipment containing batteries and/or accumulator cells must remove these batteries and accumulator cells for separate collection.

CE Restriction of Hazardous Substances in Electrical and Electronic Equipment (RoHS) Directive

The products and parts (cables, wires, etc.) of Invanti (Beijing) Technology Co., Ltd comply with the requirements of directive 2011/65/EU on restricting the use of certain hazardous substances in electrical and electronic equipment ("RoHS recasting" or "RoHS 2")

FCC STATEMENT
1. This device complies with Part 15 of the FCC Rules. Operation is subject to the following two conditions:
(1) This device may not cause harmful interference, and
(2) This device must accept any interference received, including interference that may cause undesired operation.
2. Changes or modifications not expressly approved by the party responsible for compliance could void the user's authority to operate the equipment.

NOTE: This equipment has been tested and found to comply with the limits for a Class B digital device, pursuant to Part 15 of the FCC Rules. These limits are designed to provide reasonable protection against harmful interference in a residential installation.
This equipment generates uses and can radiate radio frequency energy and, if not installed and used in accordance with the instructions, may cause harmful interference to radio communications. However, there is no guarantee that interference will not occur in a particular installation. If this equipment does cause harmful interference to radio or television reception, which can be determined by turning the equipment off and on, the user is encouraged to try to correct the interference by one or more of the following measures:
Reorient or relocate the receiving antenna.
Increase the separation between the equipment and receiver.
Connect the equipment into an outlet on a circuit different from that to which the receiver is connected.
Consult the dealer or an experienced radio/TV technician for help.

RF warning statement:
The device has been evaluated to meet general RF exposure requirement. The device can be used in portable exposure condition without restriction.

Disposal

Packaging materials can be transferred back to the raw material cycle. Dispose ofpackaging materials in accordance with legal requirements. information can be obtainedfrom your community's recycling organization.

This device contains licence-exempt transmitter(s)/receiver(s) that comply with Innovation, Science and Economic Development Canada's licence-exempt RSS(s). Operation is subject to the following two conditions:
1. This device may not cause interference.
2. This device must accept any interference, including interference that may cause undesired operation of the device.

Radiation Exposure Statement:
This equipment complies with IC radiation exposure limits set forth for an uncontrolled environment. The device can be used in portable exposure condition without restriction.

Cet appareil contient des émetteurs/récepteurs exemptés de licence qui sont conformes aux RSS exemptés de licence d'innovation, sciences et développement économique Canada. Le fonctionnement est soumis aux deux conditions suivantes:
1. Cet appareil ne peut pas causer d'interférences.
2. Cet appareil doit accepter toute interférence, y compris les interférences qui peuvent causer un fonctionnement indésirable de l'appareil.

Déclaration relative à l'exposition aux rayonnements :
Cet équipement est conforme aux limites d'exposition aux rayonnements d'IC définies pour un environnement non contrôlé. L'appareil peut être utilisé dans des conditions d'exposition portatives sans restriction.

15. Contact us

If you encounter any problems when using the product, please feel free to contact us:
https://ride5thwheel

F02说明书	服务品牌	
书型	骑马订	
尺寸	140×140mm	
比例	1：1	
时间	2026年2月	
颜色	单色 C:0 M：0 Y:0 K：85	

技术要求：
1、材质：封面封底内页105g铜版纸。
2、印刷图文颜色：单色印刷，不得见坑纹/黑点/褶皱/杂物，外观整洁，不得有错印漏印；印刷内容以提供原档为准。
3、尺寸误差：＜1mm。
4、结合方式：骑马订。
5、材料符合RoHS，HSF等环保要求。
6、“ —— ”分页线。

140 mm

User Manual

140 mm