PRODUCT MANUAL

SKU: F0507-00102-BK

BEFORE YOU BEGIN

1. Please read the instructions carefully and verify that each item is in the list.
2. Please retain these installation instructions for further reference and parts ordering information.

Estimated installation time:

20 minutes

IMPORTANT

1. Please read the installation instructions carefully before you start.
2. If the vehicle is clean and free of other debris, it will be easy to install.
3. For your safety and to ensure a satisfactory installation, please complete all the installation steps in the order shown below.

PRODUCT INFORMATION

① Bluetooth Speaker x1

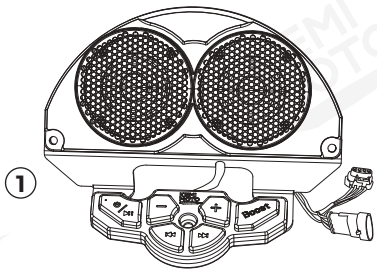

INSTALLATION TIPS

STEP 1: Remove the original screw [A].

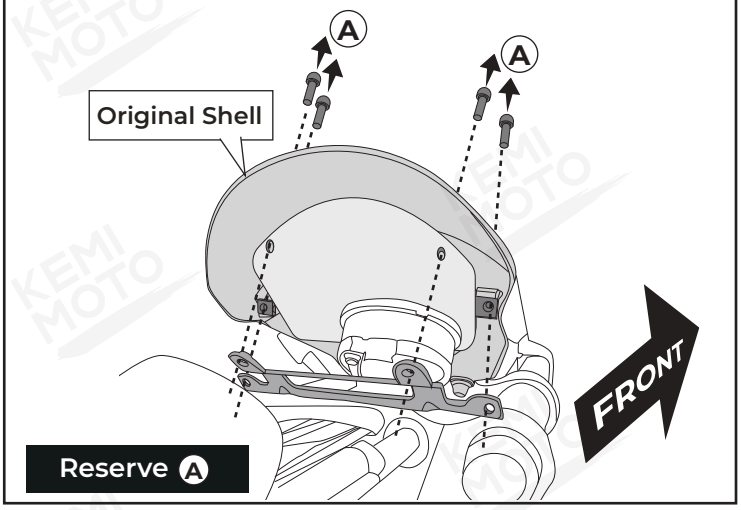

STEP 2: Remove the original bracket, and then remove the screws [B] on both sides.

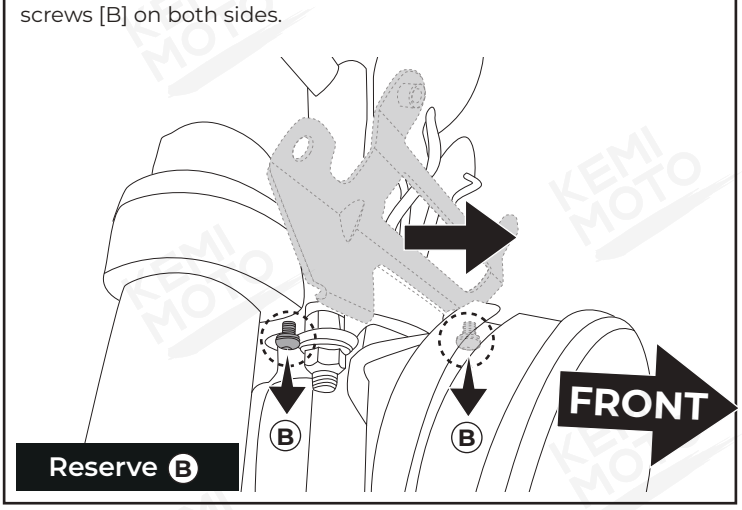

STEP 3: Remove the original screw [C].

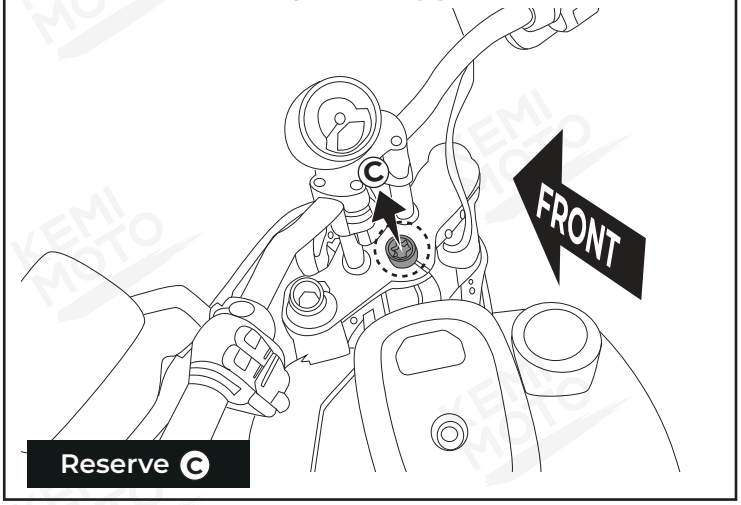

STEP 4: Thread the [1]-button panel through the middle of the front of the vehicle.

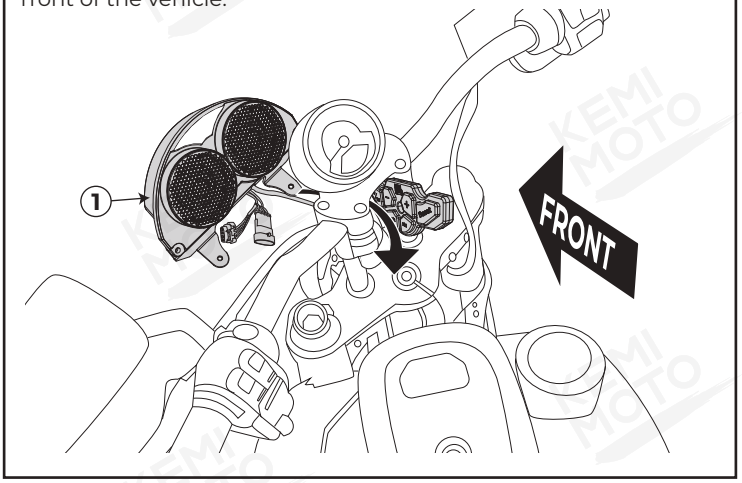

Ⓚ www.kemimoto.com Ⓚ Designed by Kemimoto Group Ⓚ Kemimoto All Rights Reserved,Infringement must be prosecuted.

STEP 5: Fix button [1] with the original screw [C].

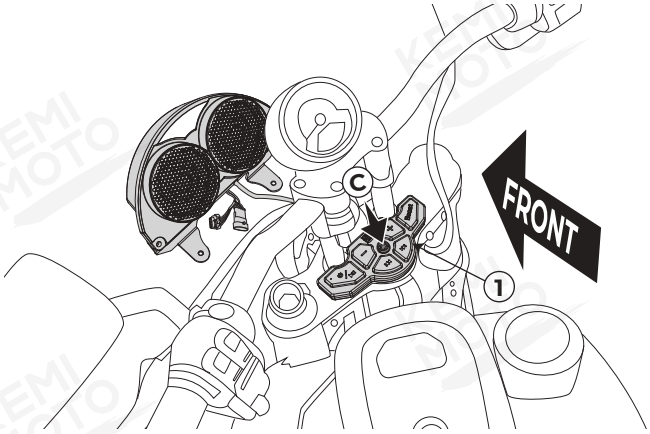

STEP 6: Unplug the original plug [D].

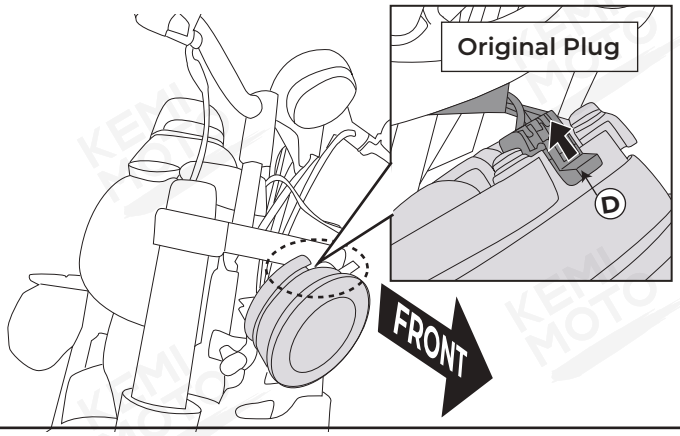

STEP 7: Plug the [1] speaker plug into the original plug [D] and the vehicle light separately.

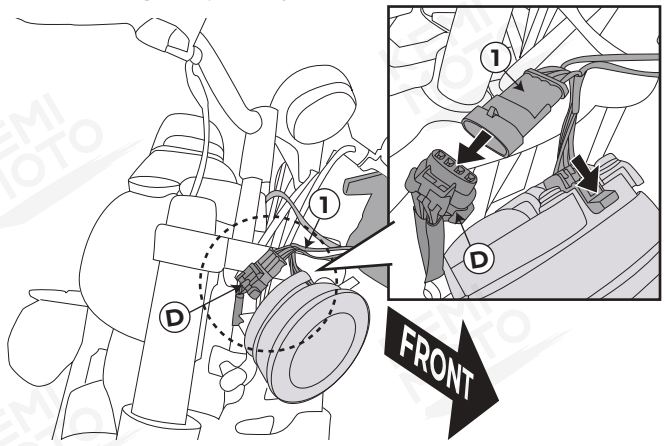

STEP 8: Use the original screw [B] to attach [1] to the vehicle, with both sides.

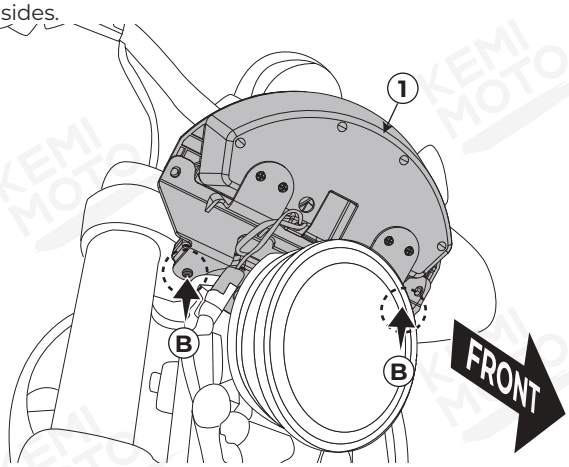

STEP 9: Install the original vehicle shell with original screw [A].

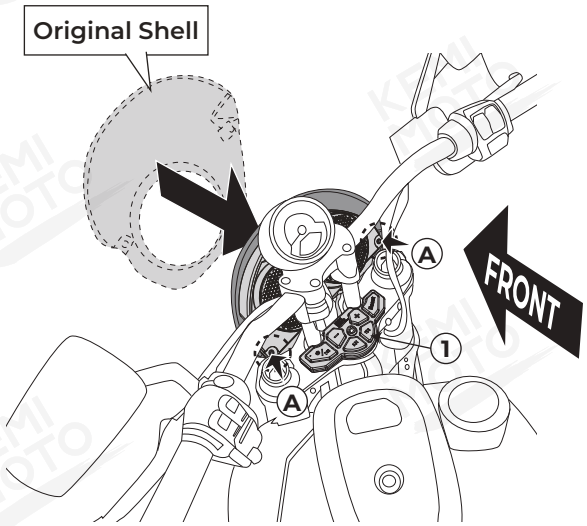

STEP 10: Installation complete.

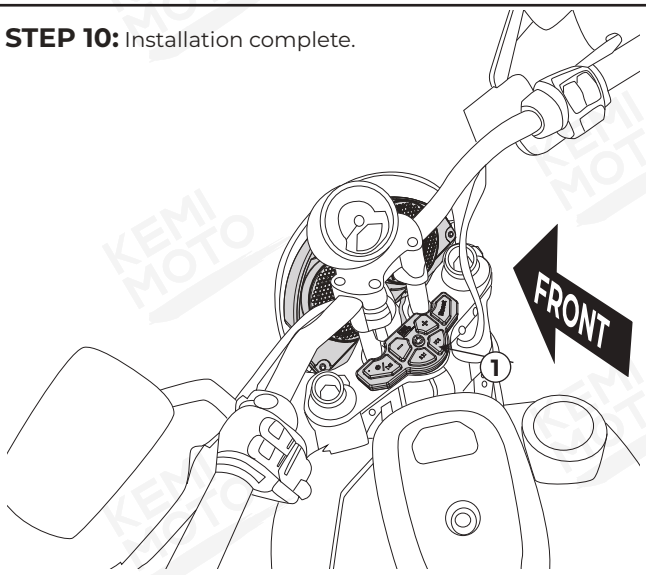

FUNCTION

Button function description.

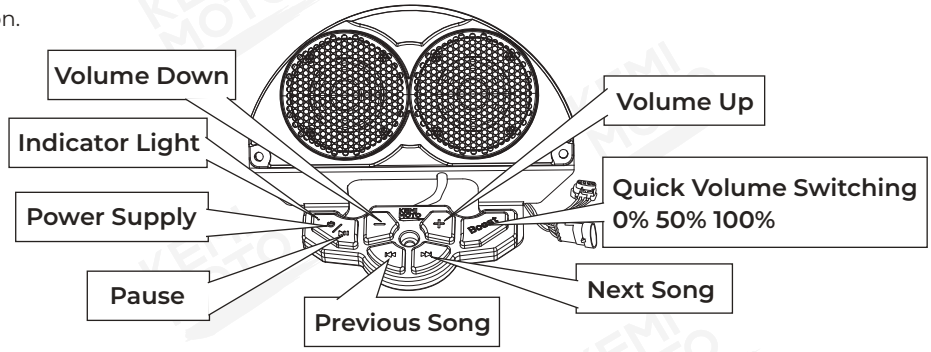

www.kemimoto.com Designed by Kemimoto Group Kemimoto All Rights Reserved,Infringement must be prosecuted.

FCC STATEMENT :

This device complies with Part 15 of the FCC Rules. Operation is subject to the following two conditions:
(1) This device may not cause harmful interference, and
(2) This device must accept any interference received, including interference that may cause undesired operation.
Warning: Changes or modifications not expressly approved by the party responsible for compliance could void the user's authority to operate the equipment.

NOTE: This equipment has been tested and found to comply with the limits for a Class B digital device, pursuant to Part 15 of the FCC Rules. These limits are designed to provide reasonable protection against harmful interference in a residential installation. This equipment generates uses and can radiate radio frequency energy and, if not installed and used in accordance with the instructions, may cause harmful interference to radio communications. However, there is no guarantee that interference will not occur in a particular installation. If this equipment does cause harmful interference to radio or television reception, which can be determined by turning the equipment off and on, the user is encouraged to try to correct the interference by one or more of the following measures:

Reorient or relocate the receiving antenna.

Increase the separation between the equipment and receiver.

Connect the equipment into an outlet on a circuit different from that to which the receiver is connected.

Consult the dealer or an experienced radio/TV technician for help.

FCC Radiation Exposure Statement:

This equipment complies with FCC radiation exposure limits set forth for an uncontrolled environment. This equipment should be installed and operated with minimum distance 20cm between the radiator & your body.