Agilent

Agilent InfinityLab LC Series

# 1260 Infinity III SFC Multisampler

# User Manual

# Notices

## Document Information

The information in this document also applies to 1260 Infinity II and 1290 Infinity II modules.

Document No: SD-29000181 Rev. E
Edition: 10/2024

## Copyright

© Agilent Technologies, Inc. 2017 - 2024

No part of this manual may be reproduced in any form or by any means (including electronic storage and retrieval or translation into a foreign language) without prior agreement and written consent from Agilent Technologies, Inc. as governed by United States and international copyright laws.

Agilent Technologies
Hewlett-Packard-Strasse 8
76337 Waldbronn, Germany

## Warranty

The material contained in this document is provided "as is," and is subject to being changed, without notice, in future editions. Further, to the maximum extent permitted by applicable law, Agilent disclaims all warranties, either express or implied, with regard to this manual and any information contained herein, including but not limited to the implied warranties of merchantability and fitness for a particular purpose. Agilent shall not be liable for errors or for incidental or consequential damages in connection with the furnishing, use, or performance of this document or of any information contained herein. Should Agilent and the user have a separate written agreement with warranty terms covering the material in this document that conflict with these terms, the warranty terms in the separate agreement shall control.

## Technology Licenses

The hardware and/or software described in this document are furnished under a license and may be used or copied only in accordance with the terms of such license.

## Restricted Rights Legend

U.S. Government Restricted Rights. Software and technical data rights granted to the federal government include only those rights customarily provided to end user customers. Agilent provides this customary commercial license in Software and technical data pursuant to FAR 12.211 (Technical Data) and 12.212 (Computer Software) and, for the Department of Defense, DFARS 252.227-7015 (Technical Data - Commercial Items) and DFARS 227.7202-3 (Rights in Commercial Computer Software or Computer Software Documentation).

## Safety Notices

**CAUTION**

A **CAUTION** notice denotes a hazard. It calls attention to an operating procedure, practice, or the like that, if not correctly performed or adhered to, could result in damage to the product or loss of important data. Do not proceed beyond a **CAUTION** notice until the indicated conditions are fully understood and met.

**WARNING**

**A WARNING notice denotes a hazard. It calls attention to an operating procedure, practice, or the like that, if not correctly performed or adhered to, could result in personal injury or death. Do not proceed beyond a WARNING notice until the indicated conditions are fully understood and met.**

# Contents

**In This Book 7**

**1 Introduction 8**

SFC Multisampler (G4767A) 9

Features of the 1260 Infinity III SFC Multisampler (G4767A) 10

Overview of the Module 11

Single Needle Setup 13

Operating Principle 15

**2 Site Requirements and Specifications 24**

Site Requirements 25

Specifications of the 1260 Infinity III SFC Multisampler (G4767A) 29

Specifications of the Sample Thermostat 32

**3 Installation 34**

Installing the Optional Sample Thermostat 35

Installing Capillaries 47

Flow Connection to the Washport (G4767A SFC Multisampler) 51

Handling Leak and Waste 53

**4 Using the Module 63**

General Information 64

Preparation of the System 68

Preparing the Module 77

Preparing the Optional Sample Thermostat 99

Transporting the Sampler 108

**5 Optimizing the Performance of the Module 115**

Delay Volume and Extracolumn Volume 116

How to Configure the Optimum Delay Volume 117

How to Achieve High Throughput 121

How to Achieve Higher Resolution 122

How to Achieve Higher Sensitivity 125

How to Achieve Lowest Carryover (G4767A SFC Multisampler) 126
How to Achieve Best Reproducibility in Feed Mode (G4767A SFC Multisampler) 128

**6 Diagnostics and Troubleshooting 129**

Diagnostic Features 130
Maintenance and Troubleshooting Tools of the Module 131
Agilent Lab Advisor Software 144

**7 Error Information 145**

What Are Error Messages 147
General Error Messages 148
Sampler Error Messages 159
Sample Thermostat Error Messages 181

**8 Maintenance 197**

Introduction to Maintenance 199
Safety Information Related to Maintenance 201
Overview of Maintenance 203
Cleaning the Module 204
Removal and Installation of the Front Door 205
Remove the Needle Assembly 209
Install the Needle Assembly 214
Exchange the Needle Seat 219
Replace the Rotor Seal 223
Replace the Injection Valve/Replace the Idex Valve 230
Remove the Metering Seal 235
Install the Metering Seal 241
Replace the Peristaltic Pump Cartridge 249
Replace the Flush Head Seal 252
Remove the Sample Loop-Flex 259
Installing the Sample Loop-Flex 265
Replace the Dummy Drawer 271

Replace the Module Firmware 280
Replace the Sample Thermostat 281

**9 Parts and Materials for Maintenance 287**
Standard Parts 288
Hotel Drawer 289
Analytical Head Assembly 100 µL 290
Flush Head Assembly 500 µL 291
Injection Valve with Actuator 293
3-Position/6-Port FI Valve 294
Needle Port Assembly 295
Door Assy Infinity III 296
Door Assy 297
Sample Thermostat Upgrade Kit 298
Bottles 299
Leak System Parts 300
SFC Multisampler Accessory Kit 301
Tubing Kit Sampler Standard 303

**10 Identifying Cables 304**
Cable Overview 305
Analog Cables 307
Remote Cables 309
BCD Cables 313
CAN/LAN Cables 315
RS-232 Cables 316
USB 317

**11 Hardware Information 318**
General Hardware Information 319
Module-Specific Hardware Information 333

**12 LAN Configuration 336**

**13 Appendix 337**
General Safety Information 338
Material Information 347
At-a-Glance Details About Agilent Capillaries 353
Waste Electrical and Electronic Equipment (WEEE) Directive 357
Radio Interference 358
RFID Statement 359
Sound Emission 361
Agilent Technologies on Internet 362

# In This Book

This manual covers the following module:

- Agilent 1260 Infinity III SFC Multisampler (G4767A)

# 1 Introduction

This chapter gives an introduction to the module and instrument overview.

**SFC Multisampler (G4767A) 9**

**Features of the 1260 Infinity III SFC Multisampler (G4767A) 10**

**Overview of the Module 11**

**Single Needle Setup 13**

**Operating Principle 15**
Principle of Feed Injection 15
Injection Sequence for Single Needle 16

# SFC Multisampler (G4767A)

In SFC, the complete solvent flow path needs to be pressurized under all conditions to avoid expansion of the supercritical fluid. With the *Feed Injection Technology* of the Agilent 1260 Infinity III SFC Multisampler, the sample volume is drawn under atmospheric pressure conditions, pressurized to system pressure, and injected by an ultrafast syringing process. This enables the injection of flexible sample volumes from 0.1 – 90 µL with highest precision, and excellent linearity over a broad volume range.

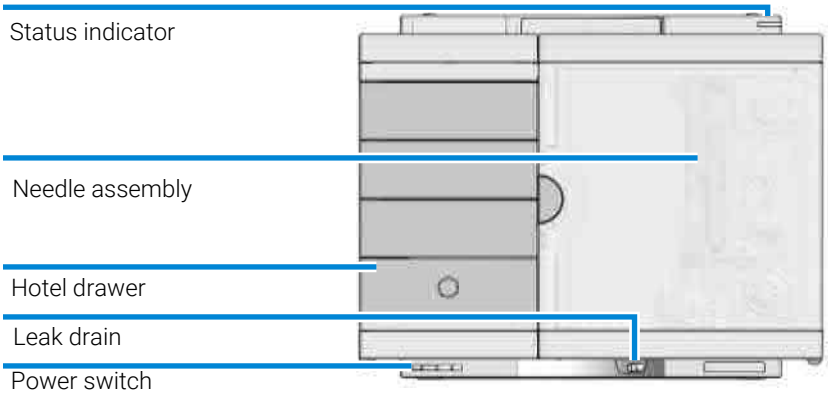


**Figure 1:** Overview of the Multisampler

# Features of the 1260 Infinity III SFC Multisampler (G4767A)

- *Unmatched flexibility* – You can choose how you want to introduce samples for injection, whether you prefer vials, microtiter plates, or any combination of formats. Sample drawers are available in three heights, and you can mix shallow drawers with deeper ones to accommodate different sample sizes.
- *High capacity* – Using shallow well-plate drawers, the Agilent 1260 Infinity III SFC Multisampler takes a maximum load of 16 microtiter plates and up to 6144 samples—the most of any single system.
- *Seamless automation* – Internal robotics move microtiter plates and other sample containers from the sample hotel to the central workspace for sample processing steps and injections.
- *Efficient temperature control* – For temperature-sensitive samples, add Agilent's compressor-based cooling system. It maintains temperature control on all vials and plates inserted into the Agilent 1260 Infinity III SFC Multisampler.
- *Instant information* – Lights on each drawer tell you about loading status, current activity, and accessibility.
- *InfinityLab Sample ID Reader* - adds a barcode reader to the 1260/1290 Infinity II and III Multisampler to achieve conformation of the sample ID on the vial with the ID in the sequence. Furthermore, it is a key part of the Agilent Advanced Sample Linking Workflow.

# Overview of the Module

The Multisampler transport mechanism uses a Cartesian robot. The X-Y drive together with the Z drive optimize the grabbing and positioning for the sample trays and the needle handling inside of the Multisampler. The sample coupler moves the sample container from the sample hotel which stores all the samples and places it on the central workspace. Then the needle coupler of the Z drive takes over and grabs the needle assembly from the needle station and performs the analytical procedures inside of the Multisampler. Due to the uncoupled needle design, the robot can do other liquid handling jobs during the analysis.

The multisampler employs an active vial/plate pusher mechanism to hold down the vial or the plate while the needle is drawn back from the sample vessel (a must in the case a septum is used). This active vial/plate pusher employs a sensor to detect the presence of a plate and to ensure accurate movement regardless of the plate used. All axes of the transport mechanism are driven by very fast BLCD motors. Optical encoders ensure the correct operation of the movement.

The Multisampler has a 100 µL metering device. With this instrument setup, it is possible to inject a maximum volume of 100 µL. For minimum internal carry-over, the entire injection flowpath is always flushed by the mobile phase.

In addition, you have two different possibilities to reduce the carry-over. First the external needle wash. In the Standard configuration, the needle flush station is equipped with a peristaltic pump to wash the outside of the needle. This reduces already low carry-over for very sensitive analysis. The bottle containing the mobile phase for the wash procedure will be located in the solvent bottle cabinet. Produced waste during this operation is channeled safely away through a waste drain.

The six-port injection valve unit is driven by a high-speed hybrid stepper motor. In the sampling sequence the valve unit bypasses the Multisampler, and connects flow from the pump to the column directly. For analysis it is crucial that all of the sample is injected onto the column and that the flow path is clean. Depending on the method, different mechanismes ensure this:

- In HPLC mode the valve unit directs the flow through the Multisampler
- In SFC mode the flushpump rinses metering device, loop, needle and needle seat

The Cooling Control of the vial/plate temperature in the Multisampler is achieved by using an additional Agilent Sample Cooler module. The sample cooler is a micro compressor-based refrigerator. A fan draws air from the central workstation above the sample container of the Multisampler. It is then blown through the fins of the cooling module, where it is cooled according to the temperature setting. The cooled air enters the Sampler Hotel through a recess underneath the special designed base plate. The air is then distributed evenly through the Sample Hotel ensuring effective temperature control, regardless of how many sample containers are in the drawer. In cooling mode, condensation is generated on the cooled side of the Sample Cooler. This condensed water is safely guided into a waste bottle for condensed water that is located underneath the working bench.

# Single Needle Setup

The Multisampler processor continuously monitors the movements of the Multisampler components. The processor defines specific time windows and mechanical ranges for each movement. If a specific step of the sampling sequence is not completed successfully, an error message is generated. Solvent is bypassed from the Multisampler by the injection valve during the sampling sequence. After the required sample container is automatically loaded from the sample hotel, it is placed on the central workspace. The needle assembly moves via a robot to the desired sample position. Then it is lowered into the sample liquid to allow the metering device to draw up the desired volume by moving its plunger back a certain distance. The needle assembly is then raised again and moved to the needle park station onto the seat to close the sample loop. Sample is applied to the column when the injection valve returns to the mainpass (main path) position at the end of the sampling sequence.

The standard sampling sequence occurs in the following order:

1. The robot loads the required sample container on the central workspace.
2. The injection valve switches to the bypass position.
3. The plunger of the metering device moves to the initialization position, pushing out clean eluent through the waste tube (port 4) for a standard or through the needle for a Multiwash system.
4. The robot couples into the needle assembly from the needle parkstation.
5. The robot unlocks the needle assembly and moves up.
6. The coupled needle assembly/robot moves to the desired sample vial (or well plate) position on the central workstation.
7. The needle lowers into the sample vial (or well plate).
8. The metering device draws the preset sample volume.
9. The needle lifts out of the sample vial (or well plate).
10. The coupled needle assembly/robot is then moved to the park station onto the seat to close the sample loop.
11. The needle assembly is locked into the park station and moves down.

12. The injection cycle is completed when the injection valve switches to the mainpass (main path) position.
13. The robot moves the sample container back into the sample hotel after the sampling sequence is done. If needle wash is required, it will be done between step 9 and 10.

# Operating Principle

## Principle of Feed Injection

In classic flow-through injection (HPLC mode), the sample is drawn into the loop while the valve is in bypass position. To inject the sample, the valve switches from the bypass to the main pass position. The pump flow is redirected and by that carries the sample towards the column. During injection, the mobile phase does not dilute the sample.

In Feed Injection, the sample is drawn into the loop and precompressed, while the valve is in the bypass position. Instead of switching to the main pass position (as in HPLC mode), the valve switches to feed position. The movement of the metering device piston pushes the precompressed sample into the pump flow (mobile phase stream). In this process, the sample and the mobile phase are mixed in the valve unit. By that, the mobile phase automatically dilutes the sample.

As the pump flow does not carry the sample, but it is fed into it by the metering device piston, there are more parameters that can be optimized in Feed Injection compared to flow-through injection. The feed speed is the speed with which the sample is pushed into the pump flow during Feed Injection. This parameter affects the degree of sample dilution by the mobile phase (pump flow). A high feed speed means a low degree of sample dilution. As the sample is less diluted, the solvent in which the sample is initially existent, is injected alongside the sample onto the column. Depending on the properties of this solvent, poor peak shapes may result due to solvent effects (e.g. overlapping peaks). A lower feed speed results in a higher degree of sample dilution, as proportionally more mobile phase is mixed with the same amount of sample during injection. When the mobile phase dilutes the sample more, the solvent effect is weaker. A weaker solvent effect improves peak shapes and results in narrower and more defined peaks.

Feed Injection parameters also affect recovery and carry over. To achieve the goal of good recovery and low carry over, the sample must be completely flushed out to the column. Low recovery leads to high carry over, which may result in carry over peaks after the sample peak.

The following parameters in the Feed Injection can optimize this behavior:

- Increase the flush-out volume, Overfeed Volume, which is a Method Parameter.
- Optimize Feed Speed (Speed how fast the sample is feed into the mobile phase stream).
- Optimize wash parameters.

## Injection Sequence for Single Needle

### Injection Sequence for single needle in HPLC mode (flow through)

Before the start of the injection sequence, and during an analysis, the injection valve is in the mainpass position. In this position, the mobile phase flows through the Multisampler metering device, sample loop, and needle, ensuring all parts in contact with sample are flushed during the run, thus minimizing carry-over.

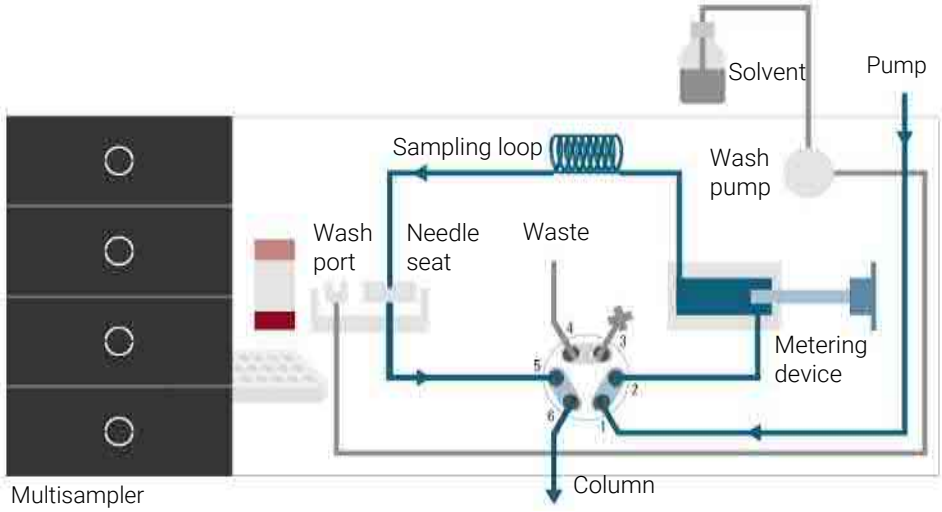


**Figure 2:** Valve in mainpass (main path), flow through

When the sample sequence begins, the valve unit switches to the bypass position. Solvent from the pump enters the valve unit at port 1, and flows directly to the column through port 6.

The standard injection starts with draw sample from vial/wellplate from the central workstation. In order to do this the needle assembly moves via robot to the desired sample position and is lowered into the sample liquid in the sample to allow the metering device to draw up the desired volume by moving its plunger back a certain distance. The needle assembly is then raised again and moved to the needle park station onto the seat to close the sample loop. In case of an injector program several steps are interspersed at this point.

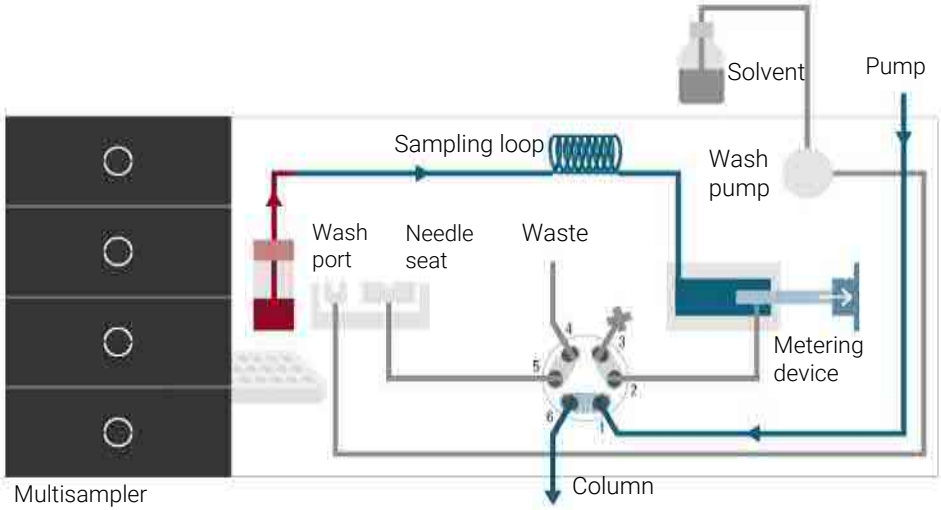


**Figure 3:** Valve in bypass, drawing sample

*Flush the Needle*

Before injection and to reduce the carry-over for very sensitive analysis, the outside of the needle can be washed in a flush port located behind the injector port. As soon as the needle is on the flush port a wash pump delivers some solvent during a defined time to clean the outside of the needle. At the end of this process the needle assembly returns to the needle port.

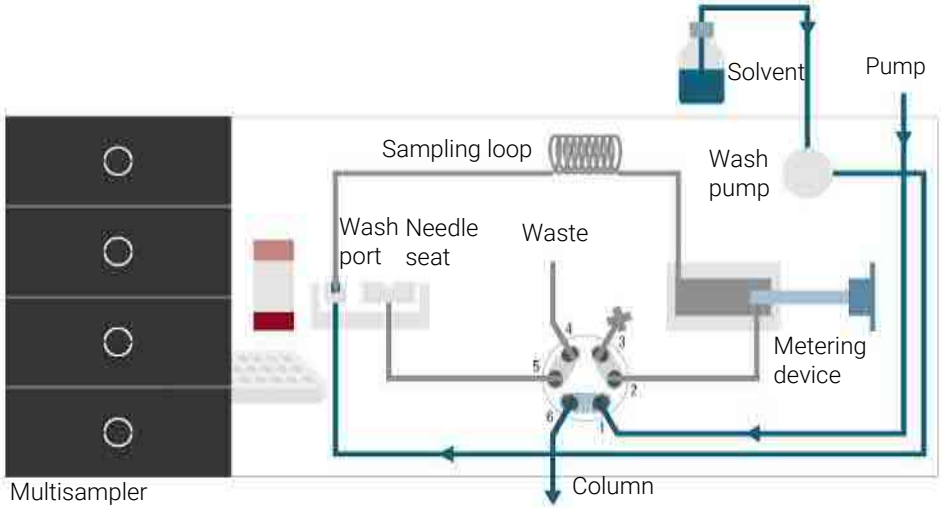


**Figure 4:** Valve in bypass, washing needle (standard wash)

*Inject-and-Run*

The final step is the inject- and run-step. The six-port valve is switched to the mainpass position, and directs the flow back through the sample loop, which now contains a certain amount of sample. The solvent flow transports the sample onto the column, and separation begins. This is the beginning of a run within an analysis. In this stage, all major performance-influencing hardware is flushed internally by the solvent flow. For standard applications no additional flushing procedure is required.

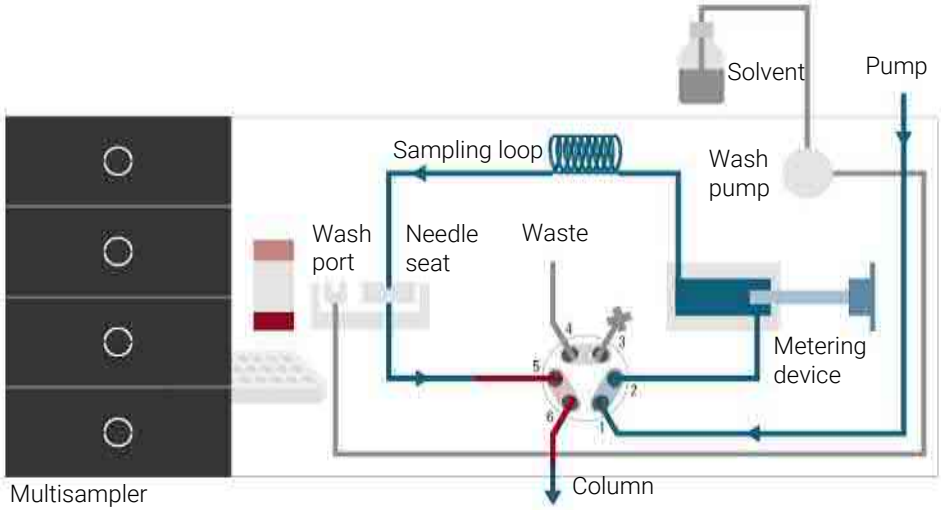


**Figure 5:** Valve in mainpass (main path), sample injected

## Injection Sequence for single needle in SFC mode (feed injection)

The injection sequence for single needle in SFC mode (feed injection) is as follows:

1. Draw sample
2. Move needle into seat
3. Precompress to system pressure

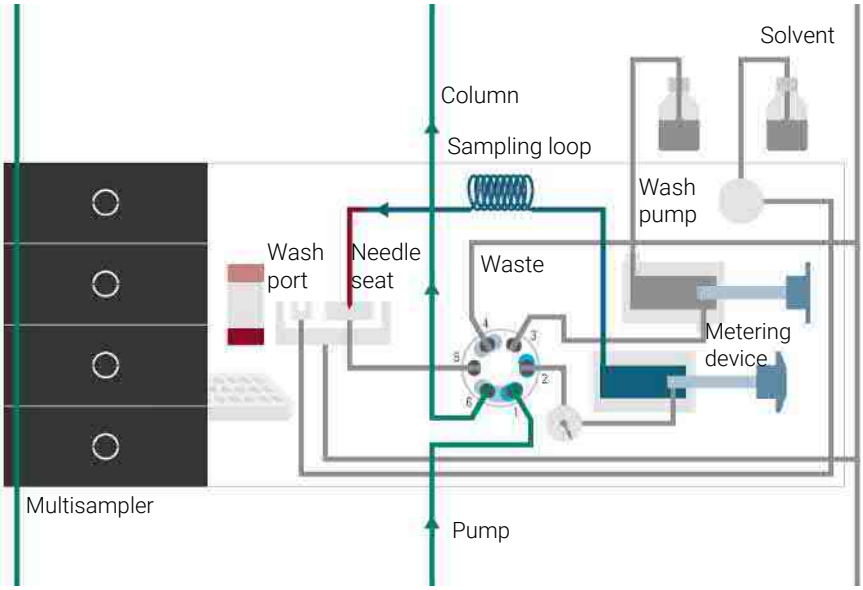


**Figure 6:** Valve in bypass, sample precompressed

4. Switch to feed position

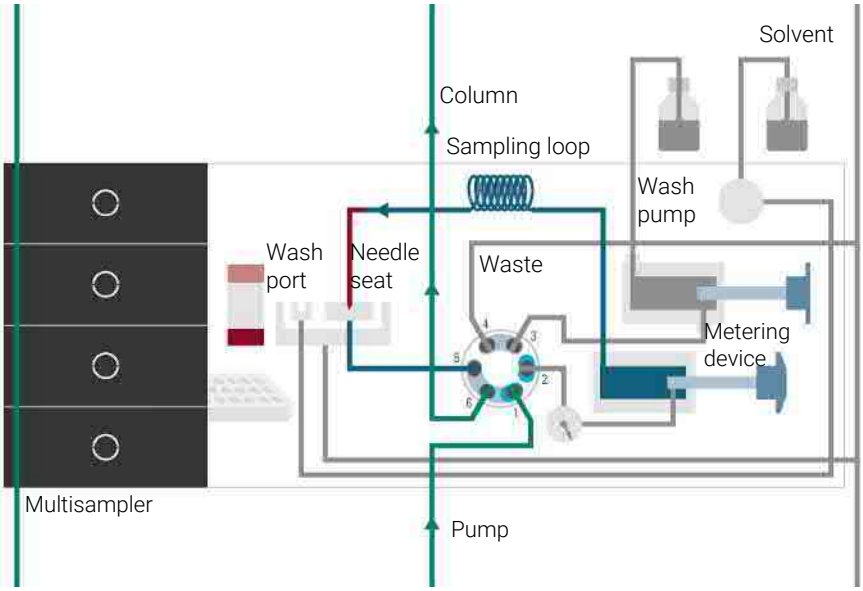


**Figure 7:** Valve in mainpass (feed postion)

5. Feed sample into pumpflow
6. Switch to bypass position

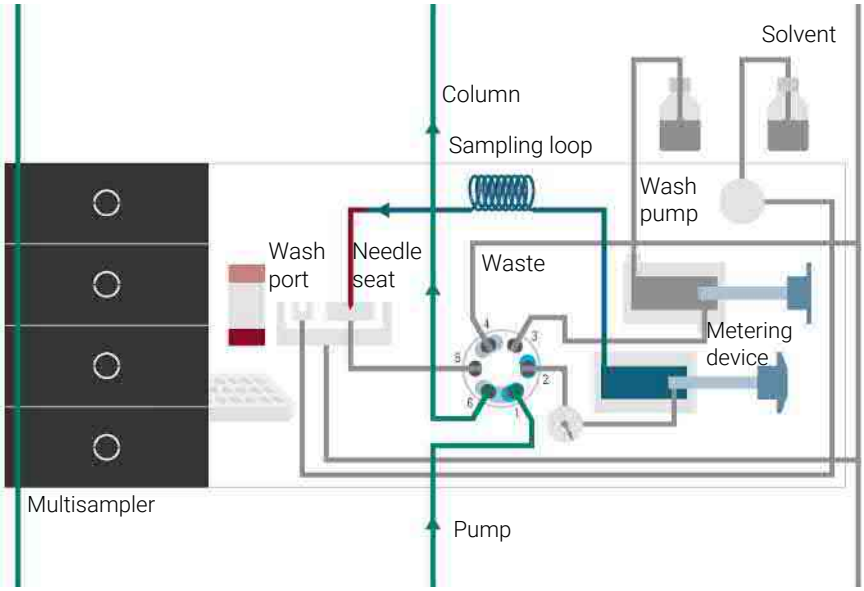


**Figure 8:** Valve in bypass

7. Decompress to 10 bar
8. Switch to purge position

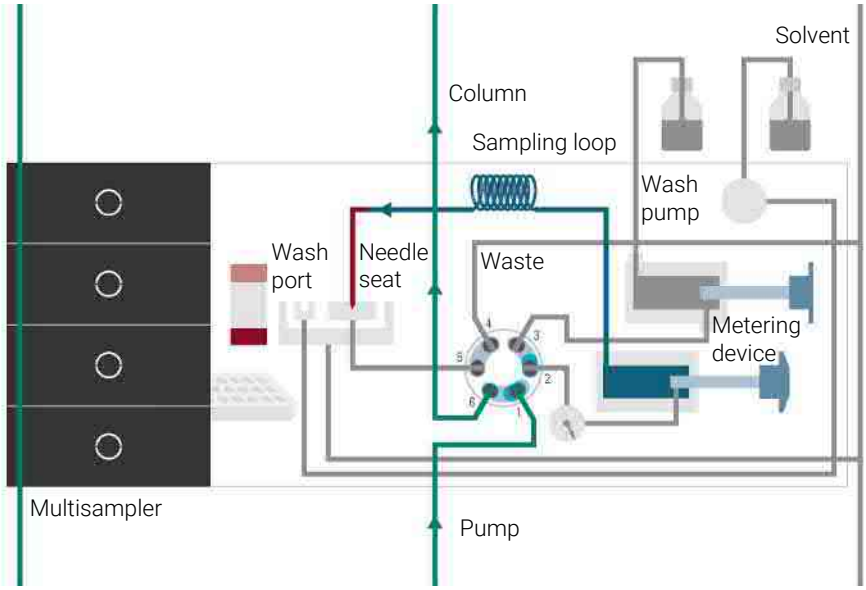


**Figure 9:** Valve in purge position

9. Purge
10. Switch to bypass position

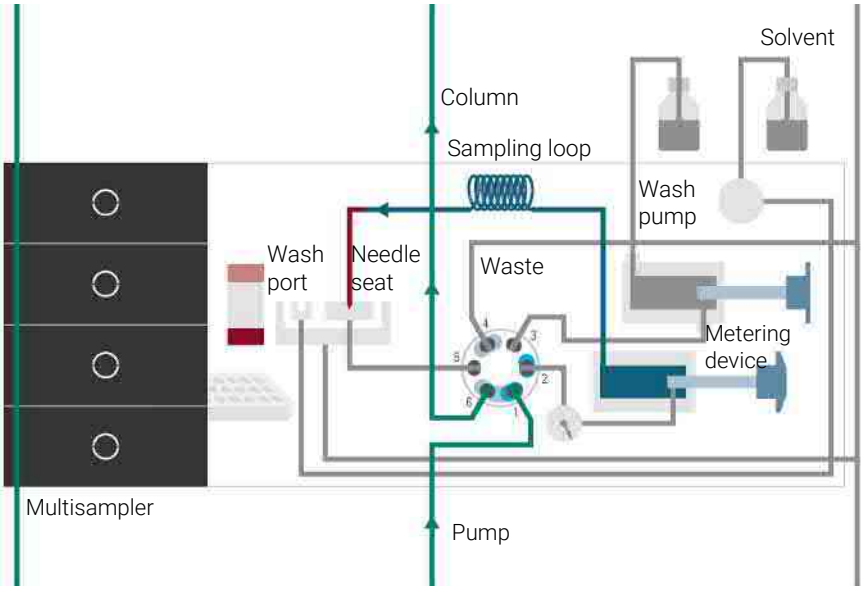


**Figure 10:** Valve in bypass

# 2 Site Requirements and Specifications

This chapter provides information on environmental requirements, physical and performance specifications.

**Site Requirements 25**
Power Considerations 25
Power Cords 26
Room Size and Ventilation 27
Bench Space 27
Condensation 28

**Specifications of the 1260 Infinity III SFC Multisampler (G4767A) 29**

**Specifications of the Sample Thermostat 32**

# Site Requirements

A suitable environment is important to ensure optimal performance of the instrument.

## Power Considerations

The module power supply has wide ranging capability. It accepts any line voltage in the range described in G7167C_Physical Specifications. Consequently there is no voltage selector in the rear of the module. There are also no externally accessible fuses, because automatic electronic fuses are implemented in the power supply.

**WARNING**

**Inaccessible power plug.**

**In case of emergency it must be possible to disconnect the instrument from the power line at any time.**

- **Make sure the power connector of the instrument can be easily reached and unplugged.**
- **Provide sufficient space behind the power socket of the instrument to unplug the cable.**

**WARNING**

**Module is partially energized when switched off, as long as the power cord is plugged in.**

**Repair work at the module can lead to personal injuries, e.g. shock hazard, when the cover is opened and the module is connected to power.**

- **Make sure that it is always possible to access the power plug.**
- **Remove the power cable from the instrument before opening the cover.**
- **Do not connect the power cable to the Instrument while the covers are removed.**

**WARNING** **Incorrect line voltage at the module**

**Shock hazard or damage of your instrument can result if the devices are connected to line voltage higher than specified.**

- **Connect your module to the specified line voltage.**

## Power Cords

Country-specific power cords are available for the module. The female end of all power cords is identical. It plugs into the power-input socket at the rear. The male end of each power cord is different and designed to match the wall socket of a particular country or region.

Agilent makes sure that your instrument is shipped with the power cord that is suitable for your particular country or region.

**WARNING** **Unintended use of power cords**

**Using power cords for unintended purposes can lead to personal injury or damage of electronic equipment.**

- **Never use a power cord other than the one that Agilent shipped with this instrument.**
- **Never use the power cords that Agilent Technologies supplies with this instrument for any other equipment.**
- **Never use cables other than the ones supplied by Agilent Technologies to ensure proper functionality and compliance with safety or EMC regulations.**

**WARNING** **Absence of ground connection**

**The absence of ground connection can lead to electric shock or short circuit.**

- **Never operate your instrumentation from a power outlet that has no ground connection.**

**WARNING** **Electrical shock hazard**

**Solvents may damage electrical cables.**

- **Prevent electrical cables from getting in contact with solvents.**
- **Exchange electrical cables after contact with solvents.**

## Room Size and Ventilation

**WARNING**

**Flammable refrigerant**

**Formation of flammable gas-air mixtures inside the Sample Thermostat and laboratory.**

- **Keep open fire or sources of ignition away from the device.**
- **Ensure a room size of 4 $m^3$ (1 $m^3$ for every 8 g of R600a refrigerant inside of the Sample Thermostat).**
- **Ensure adequate ventilation: typical air exchange of 25 $m^3/h$ per $m^2$ of laboratory floor area.**
- **Keep all ventilation openings in the enclosure clear of obstructions. Do not block the openings on the circumference of the Sample Thermostat.**

## Bench Space

The module dimensions and weight (see Physical Specifications) allow you to place the module on almost any desk or laboratory bench. It needs an additional 2.5 cm (1.0 inches) of space on either side and approximately 8 cm (3.1 inches) in the rear for air circulation and electric connections.

If the bench shall carry a complete HPLC system, make sure that the bench is designed to bear the weight of all modules.

The module should be operated in a horizontal position, especially if a Sample Cooler or Sample Thermostat is installed. Use a bubble level to check the leveling of the sampler.

**WARNING**

**Heavy weight**

**The module is heavy.**

- **Carry the module at least with 2 people.**
- **Avoid back strain or injury by following all precautions for lifting heavy objects.**
- **Ensure that the load is as close to your body as possible.**
- **Ensure that you can cope with the weight of your load.**

**NOTE**

Agilent recommends that you install the HPLC instrument in the InfinityLab Flex Bench rack. This option helps to save bench space as all modules can be placed into one single stack. It also allows to easily relocate the instrument to another lab.

## Condensation

**CAUTION**

Condensation within the module

Condensation can damage the system electronics.

- Do not store, ship or use your module under conditions where temperature fluctuations could cause condensation within the module.
- If your module was shipped in cold weather, leave it in its box and allow it to warm slowly to room temperature to avoid condensation.

# Specifications of the 1260 Infinity III SFC Multisampler (G4767A)

**Table 1:** Physical specifications of the Agilent 1260 Infinity III SFC Multisampler (G4767A)

| Type | Specification | Comments |
|---|---|---|
| Weight | 22 kg (48.5 lbs) | w/o sample thermostat |
| Dimensions (height × width × depth) | 320 x 396 x 468 mm (12.6 x 15.6 x 18.4 inches) | |
| Line voltage | 100 – 240 V~, ±10% | Wide-ranging capability |
| Line frequency | 50 or 60 Hz, ±5% | |
| Power consumption | 180 VA, 180 W | |
| Ambient operating temperature | 4–40 °C (39 – 104 °F) | |
| Ambient non-operating temperature | -40–70 °C (-40 – 158 °F) | |
| Humidity | < 95% r.h. at 40 °C (104 °F) [1] | Non-condensing |
| Operating altitude | Up to 3000 m (9842 ft) | |
| Safety standards: IEC, EN, CSA, UL | Overvoltage category II, Pollution degree 2 | For indoor use only |
| ISM Classification | ISM Group 1 Class B | According to CISPR 11 |
| Permitted solvents | Boiling point ≥ 56 °C (133 °F) Auto-ignition temperature ≥ 200 °C (392 °F) | |

1 If a sample thermostat is included the upper value for humidity can be reduced. Please check your lab conditions to stay beyond dew point values for non–condensing operation.

**Table 2:** Performance specifications of the Agilent 1260 Infinity III SFC Multisampler (G4767A)

| Type | Specification | Comments |
|---|---|---|
| Designed for use with Agilent InfinityLab Assist | Intuitive User Interface, Automated Workflows, Predictive Maintenance & Assisted Troubleshooting | |
| Injection range SFC Mode | Default 0.1–90 µL in 0.1 µL increments | Up to 600 bar using the 100 µL analytical head |
| Injection range HPLC/Hybrid Mode | Default 0.1–100 µL in 0.1 µL increments | Up to 800 bar using the 100 µL analytical head |
| Injection precision in LC mode | < 0.15% RSD or SD <10 nL, whatever is greater | Measured caffeine |
| Injection precision in SFC mode | 0.1 – 10 µl: < 0.3% RSD or 10 nL, whatever is greater. At 10 µl: < 0.25% RSD | Measured caffeine |
| Injection linearity in SFC mode | 0.9999 in the range of 0.1–10 µL | Measured caffeine |
| Injection linearity in LC mode | 0.9999 in the range of 0.1–100 µL | Measured caffeine |
| SFC Pressure range | Up to 600 bar | Max. pressure for basic instrument (SFC Mode) |
| HPLC/Hybrid Pressure range | Up to 800 bar | Max. pressure for basic instrument (LC Mode) |
| Sample viscosity range | 0.2–5 cP | |
| Sample capacity | *1H Drawer* up to 8 drawers and 16 positions Shallow well plates (MTP) | Max. 6144/1536 samples (384 MTP/96) |
| | *2H Drawer* up to 4 drawers and 8 positions MTP, deep well plates, vials, Eppendorf | 3072 samples, 432 vials (2 mL) |
| | *3H Drawer* up to 2 drawers and 4 positions MTP, deep well plates, vials up to 6 mL, Eppendorf | 1536 samples, 60 vials (6 mL), 384 vials (1 mL), 216 vials (2 mL) |
| LC Injection cycle time | < 10 s using following standard conditions: Default draw speed: 100 µL/min Default eject speed: 400 µL/min Injection volume: 1 µL | Time between 2 injections is not mechanically limited, time delay depends on communication speed of software, OS or network connections |

| Type | Specification | Comments |
|---|---|---|
| SFC Injection cycle time | < 13 s using following conditions: Default draw speed: 100 µL/min Feed Speed: 1000 µL/min Injection volume: 1 µL | With additional 4 s purge within run. |
| Carry over in LC mode | < 0.003% (30 ppm) | Based on injections using the standard LC injection principle |
| Carry over in SFC mode | < 0.002% (20 ppm) | Based on injections using the Feed Injection principle |
| Instrument Control | LC & CE Drivers A.02.16 or above<br>Instrument Control Framework (ICF) A.02.04 or above<br>Instant Pilot (G4208A) with firmware B.02.21 or above<br>Lab Advisor B.02.09 or above<br>InfinityLab Assist (G7180A) with firmware D.07.40 or above | For details about supported software versions refer to the compatibility matrix of your version of the LC & CE Drivers |
| Communications | Controller Area Network (CAN)<br>Local Area Network (LAN)<br>ERI: ready, start, stop and shut-down signals | |
| Maintenance and safety-related features | Extensive diagnostics, error detection and display with Agilent Lab Advisor software<br>Leak detection, safe leak handling, leak output signal for shutdown of pumping system, and low voltages in major maintenance areas | |
| GLP features | Early maintenance feedback (EMF) for continuous tracking of instrument usage with user-settable limits and feedback messages. Electronic records of maintenance and errors | |
| Housing | All materials recyclable. | |

# Specifications of the Sample Thermostat

The Agilent InfinityLab Sample Thermostat is the combination of an electric heater and a vapor-compression refrigeration system. It uses isobutane as a non-Freon refrigerant, which is harmless to the environment and does not affect the ozone layer and global warming, but it is combustible. Please adhere to the warnings listed in the manual.

**Table 3:** Physical specifications of the Sample Thermostat (G7167-60201)

| Type | Specification | Comments |
|---|---|---|
| Weight | < 6 kg (< 13.2 lbs) | |
| Dimensions (height x width x depth) | 205 x 340 x 370 mm (8.1 x 13.4 x 14.6 inches) | |
| Refrigerant gas | R600a (max. 0.030 kg) | Ozone depletion potential (ODP) =0<br>Global warming potential (GWP) =3 |
| Supply voltage | 24 VDC | |
| Current | 10 A max. | |
| Ambient operating temperature | 4 °C to 40 °C (39 °F to 104 °F) | For sample cooling, ambient temperature ≥10 °C |
| Ambient non-operating temperature | -40 °C to +70 °C (-40 °F to +158 °F) | |
| Humidity | < 95 % r.h. at 40 °C (104 °F) | Non-condensing |
| Operating altitude | Up to 3000 m (9842 ft) | |
| Safety standards: IEC, EN, CSA, UL | Pollution degree 2 | For indoor use only |
| ISM Classification | ISM Group 1 Class B | According to CISPR 11 |

**CAUTION**

General hazards and improper disposal

Improper disposal of the media and components used pollutes the environment.

- The disposal or scrapping of the Sample Thermostat must be carried out by a qualified disposal company.
- All media must be disposed of in accordance with national and local regulations.
- Please contact your local Agilent Service Center in regard to safe environmental disposal of the appliance or check www.agilent.com for more info.

**Table 4:** Performance specifications of the Sample Thermostat (G7167-60201)

| Type | Specifications |
|---|---|
| Operating principle | High performance, low-energy consumption micro-compressor based cooler with natural R600a coolant (Isobutane max. 0.030 kg), user-upgradable |
| Temperature range | from 4 °C to 40 °C |
| Temperature settable | from 4 °C to 40 °C in 1 ° increments |
| Temperature accuracy (<25 °C, <50 % r.H.) | 2 °C to 6 °C at a setpoint of 4 °C |

**Table 5:** Minimum system requirements for the G7167-60201 Sample Thermostat

| Type | Specification |
|---|---|
| LC & CE Drivers | A.02.14, (A.02.18) [2] or above |
| Instrument Control Framework (ICF) | A.02.04, (A.02.05) [2] or above |
| Lab Advisor Software | 2.19 or above |
| Firmware | D.07.37 or above |

2 Minimum version for full thermostat functionality.

# 3 Installation

The installation of the module will be done by an Agilent service representative. In this chapter, only installation of user-installable options and accessories are described.

**Installing the Optional Sample Thermostat 35**
Unpacking the Unit 35
Install the Sample Thermostat 36

**Installing Capillaries 47**
Install Capillaries 47

**Flow Connection to the Washport (G4767A SFC Multisampler) 51**

**Handling Leak and Waste 53**
Drain Connectors Installation 56
SFC Waste Concept 60
Waste Guidance 62
Leak Sensor 62

# Installing the Optional Sample Thermostat

## Unpacking the Unit

### Damaged Packaging

If the delivery packaging shows signs of external damage, please call your Agilent Technologies sales and service office immediately. Inform your service representative that the instrument may have been damaged during shipment.

**CAUTION**

"Defective on arrival" problems

If there are signs of damage, please do not attempt to install the module. Inspection by Agilent is required to evaluate if the instrument is in good condition or damaged.

- Notify your Agilent sales and service office about the damage.
- An Agilent service representative will inspect the instrument at your site and initiate appropriate actions.

### Condensation

**CAUTION**

Condensation within the module

Condensation can damage the system electronics.

- Do not store, ship or use your module under conditions where temperature fluctuations could cause condensation within the module.
- If your module was shipped in cold weather, leave it in its box and allow it to warm slowly to room temperature to avoid condensation.

## Delivery Checklist

Ensure that all parts and materials have been delivered with your module. The delivery checklist is shown below. For parts identification, please check the illustrated parts breakdown in Sample Thermostat Upgrade Kit on page 298. Please report any missing or damaged parts to your local Agilent Technologies sales and service office.

**Table 6:** Delivery checklist for the Sample Thermostat

| Description | Quantity |
|---|---|
| G7167-60201 (Sample Thermostat) | 1 |
| 5067-6208 (Condensate Drainage Kit) | 1 |
| Declaration of Conformity | 1 |
| Customer Letter | 1 |

## Install the Sample Thermostat

**Tools required**

| Qty. | p/n | Description |
|---|---|---|
| 1 | 5182-3466 | Torx screwdriver T10<br>(for the Sample Thermostat)<br>**OR** |
| 1 | 5023-3089 | Torx key set<br>(part of the G7120-68708 InfinityLab LC Series Tool Kit) |

**Parts required**

| Qty. | p/n | Description |
|---|---|---|
| 1 | | Sampler |
| 1 | G7167-60201 | Sample Thermostat |
| 1 | | Power cord |
| 1 | 5067-6208 | Condensate Drainage Kit |

**Preparations**

- The hosting sampler is installed in the HPLC stack.
- If needed, update the firmware of the hosting sampler to ensure that it supports the type of thermostat you are about to install, see Specifications of the Sample Thermostat on page 32.

**NOTE**

Visit https://www.agilent.com/ for a video tutorial on installing the Agilent InfinityLab Sample Thermostat. Find the video by the following options:
Enter the link https://www.agilent.com/search/?Ntt=install-infinitylab-sample-thermostat.
Alternatively, the video is available on the landing page of any compatible sampler under the section Videos.

**WARNING**

**Flammable refrigerant**

**Formation of flammable gas-air mixtures inside the Sample Thermostat and laboratory.**

- **Keep open fire or sources of ignition away from the device.**
- **Ensure a room size of 4 $m^3$ (1 $m^3$ for every 8 g of R600a refrigerant inside of the Sample Thermostat).**
- **Ensure adequate ventilation: typical air exchange of 25 $m^3$/h per $m^2$ of laboratory floor area.**
- **Keep all ventilation openings in the enclosure clear of obstructions. Do not block the openings on the circumference of the Sample Thermostat.**

**WARNING**

**Flammable refrigerant used**

- **When handling, installing and operating the Sample Thermostat, care should be taken to avoid damage to the refrigerant tubing or any part of the Sample Thermostat.**

**WARNING**

**In the event of a damage**

- **Keep open fire or sources of ignition away from the device.**
- **Ventilate the room for several minutes.**
- **Do not use the Sample Thermostat any more.**

**CAUTION**

Routing of the condensation tubing

Proper routing of the condensation tubing is critical for correct condensate drainage.

- Do not place the sampler directly on the bench.

**CAUTION**

Condensate inside the module

Damage to the electronics of the module

- After installation of the Sample Thermostat, wait at least 30 min before switching on the module.
- Make sure there is no condensate inside the module.

**NOTE**

If the Sample Thermostat is disconnected from the power supply, wait for at least five minutes before replugging and switching on the compressor again.

**NOTE**

Even under average humidity conditions, a significant amount of condensed water gathers every day. A suitable container must be provided and emptied regularly in order to avoid overflow.

**NOTE**

For best cooling performance of the thermostat, the 2H drawer must be installed in the lowest position. Use the dummy drawers (G4267-60024) if no full hotel configuration is needed.

**NOTE**

Depending on the ambient conditions in the lab, the amount of condensate can vary from 200 mL to 2 L per day. Do not fill waste containers for the condensate to the top. Regularly empty the waste container.

**NOTE**

The setup with the condensate collector funnel is suitable for bench installations only. For installations on an InfinityLab Laboratory Instrument Bench, use the alternative installation described in *Installation of the Infinity II Cooler/Thermostat Condensate Drainage Tubing Kit Technical Note (G7167-CoolerCondensateDrainage-TechPu-en-SD-29000254.pdf, SD-29000254)* . Enter the link https://www.agilent.com/search/?Ntt=Installation-of-the-Infinity-II-Cooler/Thermostat-Condensate-Drainage-Tubing-Kit-Technical-Note to locate the TechNote on https://www.agilent.com/.

1 Ensure that the power switch on the front of the module is OFF (switch stands out).

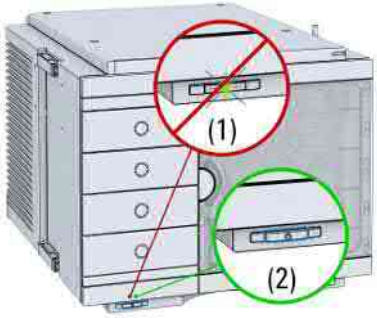


2 Disconnect the power cable from the sampler.

3 Loosen the four screws on the rear of the module.

4 Remove the sheet metal back cover of the sampler.

5 Slide the Sample Thermostat halfway into the sampler.

**WARNING**

**Module is partially energized when switched off, as long as the power cord is plugged in.**

**Repair work at the module can lead to personal injuries, e.g. shock hazard, when the cover is opened and the module is connected to power.**

- **Make sure that it is always possible to access the power plug.**
- **Do not use the Sample Thermostat if it is not operating correctly or has been damaged. Disconnect it from the power supply and call your local service center.**
- **Remove the power cable from the module before opening the cover.**
- **Do not connect the power cable to the module while the covers are removed.**
- **If the Sample Thermostat is disconnected from the power supply, you should wait for at least five minutes before switching on the compressor.**

**CAUTION**

Damaged electronics

- To avoid damages of the electronics of the module make sure the power cords are unplugged before disconnecting or reconnecting the sampler to the Sample Thermostat cables.

6 Connect the power cable and the data cable to thethermostat.

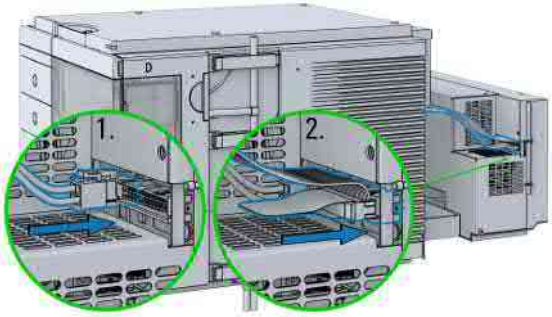

**CAUTION**

Damage to the cables

- Do not bend or pinch the cables.
- Make sure that the Sample Thermostat fits perfectly in the sampler.

7 Slide the Sample Thermostat all the way into the sampler.

8 Fix the Sample Thermostat with the four screws.

9 Use a bubble level to check the leveling of the sampler.

**NOTE**

To ensure adequate drainage for condensate, the module should be operated in a proper horizontal position.

**10** Attach the condensate tube to the outlet port of the condensate collector funnel.

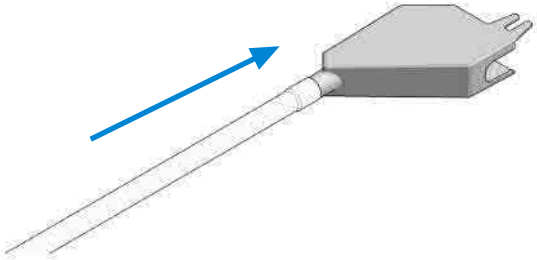

**11** Mount the drain connector on the condensate drainage outlet tube. Ensure the correct orientation of the spout.

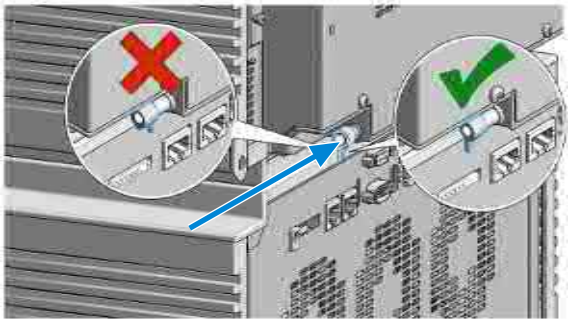

**12** Remove the screw situated above the condensate drainage outlet tube.

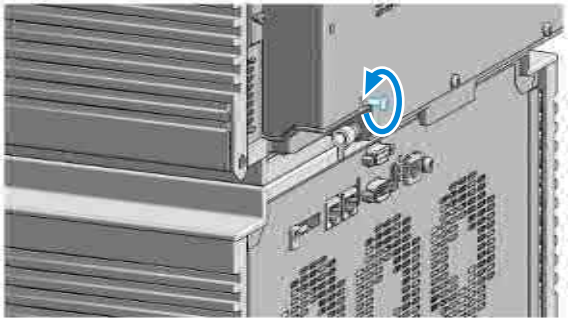

**13** Place the washer over the thread of the screw (1). Screw the screw and washer halfway into the hole in the back of the thermostat (2).

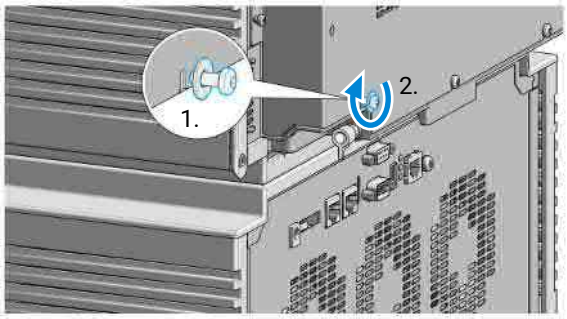


**14** Position the condensate collector funnel underneath the condensate drainage outlet tube (1) and fix it to the back of the thermostat by tightening the screw (2). Ensure correct orientation and avoid overtightening the screw.

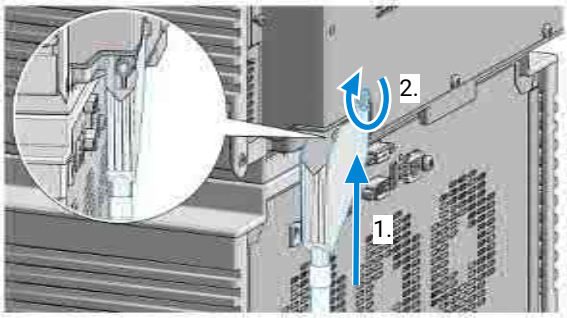

**15** Shorten the condensate tube so that it runs straight into the waste container without any unnecessary detour (1). If needed, use the 90 ° tubing connector provided in the kit to eliminate uphill sections, which might occur at the edge of the bench (2). Agilent recommends the use of a separate canister for condensate collection to avoid drainage problems (3).

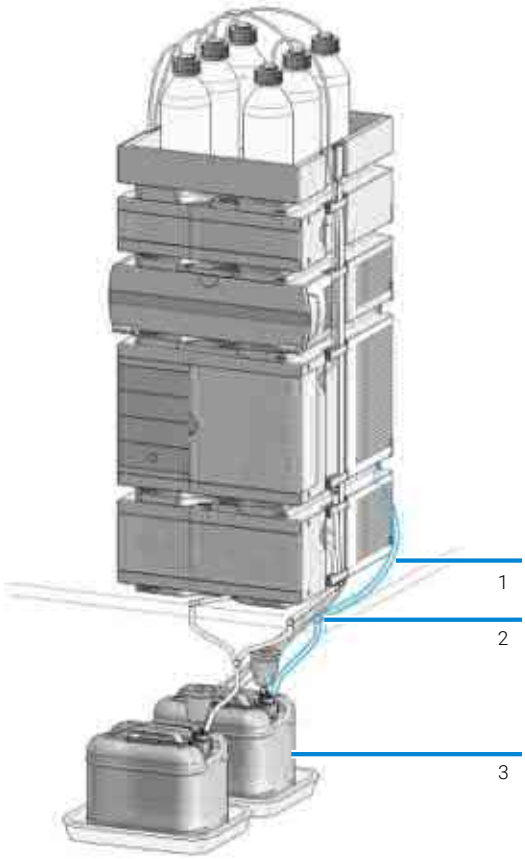

**16** Ensure that the tubing runs straight into the waste canister without any bends or joints and it is not hindered by any mechanical obstacle. Agilent recommends using a 6 L waste canister equipped with a suitable InfinityLab Stay Safe cap for optimal condensate handling. If you decide to use your own waste solution, make sure that the tubes don't immerse in the liquid.

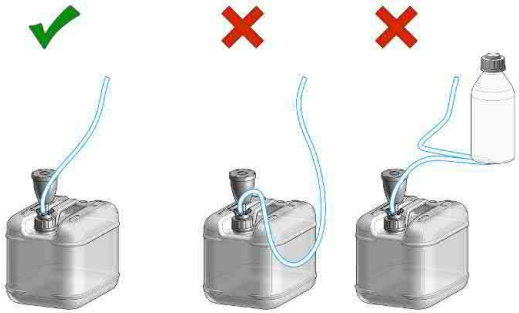

**NOTE** For more information, see Handling Leak and Waste on page 53.

**NOTE** Depending on the ambient conditions in the lab, the amount of condensate can vary from 200 mL to 2 L per day. Do not fill the waste container for the condensate to the top. Regularly empty the waste container.

**CAUTION** Damage to the Sample Thermostat

- Wait at least 30 min before switching on the compressor of the thermostat.
- This allows the refrigerant and system lubrication to reach equilibrium.

**17** Connect the power cable to the power connector at the rear of the module.

**18** Configure the Sample Thermostat in the CDS.

# Installing Capillaries

This section provides information on how to install capillaries and fittings.

## Install Capillaries

Capillaries and connections depend on which system is installed.

**NOTE** As you move to smaller-volume, high-efficiency columns, you will want to use narrow id tubing, as opposed to the wider id tubing used for conventional HPLC instruments.

**NOTE** Agilent capillaries are color-coded for quick identification, see At-a-Glance Details About Agilent Capillaries on page 353.

**Table 7:** Capillary connections for 1260 Infinity III systems

| p/n | From | To |
|---|---|---|
| G7120-60007 (Bottle Head Assembly) | Solvent Bottle | Infinity III Pump |
| 5500-1246 (Capillary ST 0.17 mm x 500 mm SI/SI) | Pump | Sampler |
| 5500-1217 (Capillary, ST, 0.17 mm x 900 mm SI/SX) | Pump | Vialsampler with ICC |
| 5500-1246 (Capillary ST 0.17 mm x 500 mm SI/SI) | Multisampler | MCT Valve/Heat Exchanger |
| 5500-1252 (Capillary, ST, 0.17 mm x 400 mm SL/SL) | Vialsampler | MCT Valve/Heat Exchanger |
| 5500-1240 (Capillary ST 0.17 mm x 105 mm SL/SL) | Vialsampler | ICC Heat Exchanger |
| 5500-1250 (Capillary, ST, 0.17 mm x 120 mm SL/SL, long socket) | ICC Heat Exchanger | Column |
| 5500-1193 (InfinityLab Quick Turn Capillary ST 0.17 mm x 105 mm, long socket) | MCT Heat Exchanger | Column |
| 5500-1191 (InfinityLab Quick Turn Capillary ST 0.12 mm x 280 mm, long socket) | Column/MCT Valve | Detector |
| 5062-8535 (Waste accessory kit (Flow Cell to waste)) | VWD | Waste |
| 5062-2462 (Tube PTFE 0.7 mm x 5 m, 1.6 mm od) | DAD/FLD | Waste |
| G5664-68712 (Analytical tubing kit 0.25 mm i.d. PTFE-ESD) | Detector | Fraction Collector |

For correct installation of capillary connections it's important to choose the correct fittings, see Syntax for Capillary Description.

1 Select a nut that is long enough for the fitting you'll be using.

2 Slide the nut over the end of the tubing or capillary.

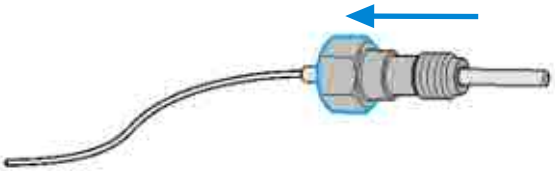

3 Carefully slide the ferrule components on after the nut and then finger-tighten the assembly while ensuring that the tubing is completely seated in the bottom of the end fitting.

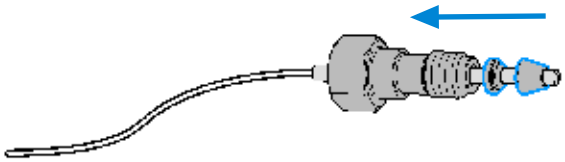

4 Use a stable port installed to the module to gently tighten the fitting facing to the module. Or use the column to tighten the fitting facing to the column. This measure forces the ferrule to seat onto the tubing or capillary.

**NOTE** Do not overtighten. Over-tightening will shorten the lifetime of the fitting.

5 Loosen the nut and verify that the ferrule is correctly positioned on the tubing or capillary.

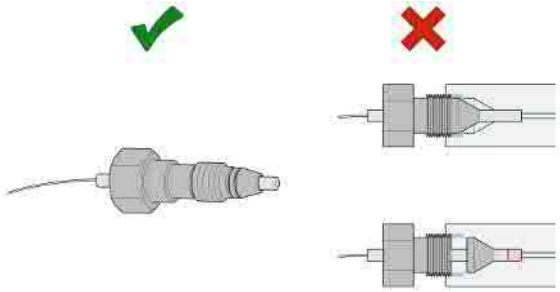

**NOTE** The first time that the Swagelok fitting is used on a column or an injection valve, the position of the ferrule is permanently set. If changing from a column or an injection valve to another, the fitting may leak or decrease the quality of the separation by contributing to band broadening.

For Bio and Bio-Inert Systems, the Swagelok instructions do not apply.

# Flow Connection to the Washport (G4767A SFC Multisampler)

**Preparations**

- Module is installed in the system.
- Use an appropriate solvent based on the sample and mobile phase chemistries.
- The composition of the wash solvent should be the most solubilizing compatible solvent (your strongest diluent). Selecting the wash solvent is part of the method development.
- A mixture of 50 % up to 100 % organic solvent in distilled water is a good choice for many applications.

1. Place a needle wash solvent reservoir into the solvent cabinet.
2. Connect the a Bottle Head Assembly to the solvent reservoir and close the bottle.
3. Guide the tube of the Needle Wash Bottle Head Assembly through the cover opening and connect it to the peristaltic pump (use a TEFZEL union 0100-1846 and the FEP tubing 0890-1760 from the Standard Tubing kit).
4. Route the drainage of the wash port outlet to the waste container.
5. Prime or auto clean the wash solvent tubings.
6. Check setting up the autosampler with OpenLab ChemStation.

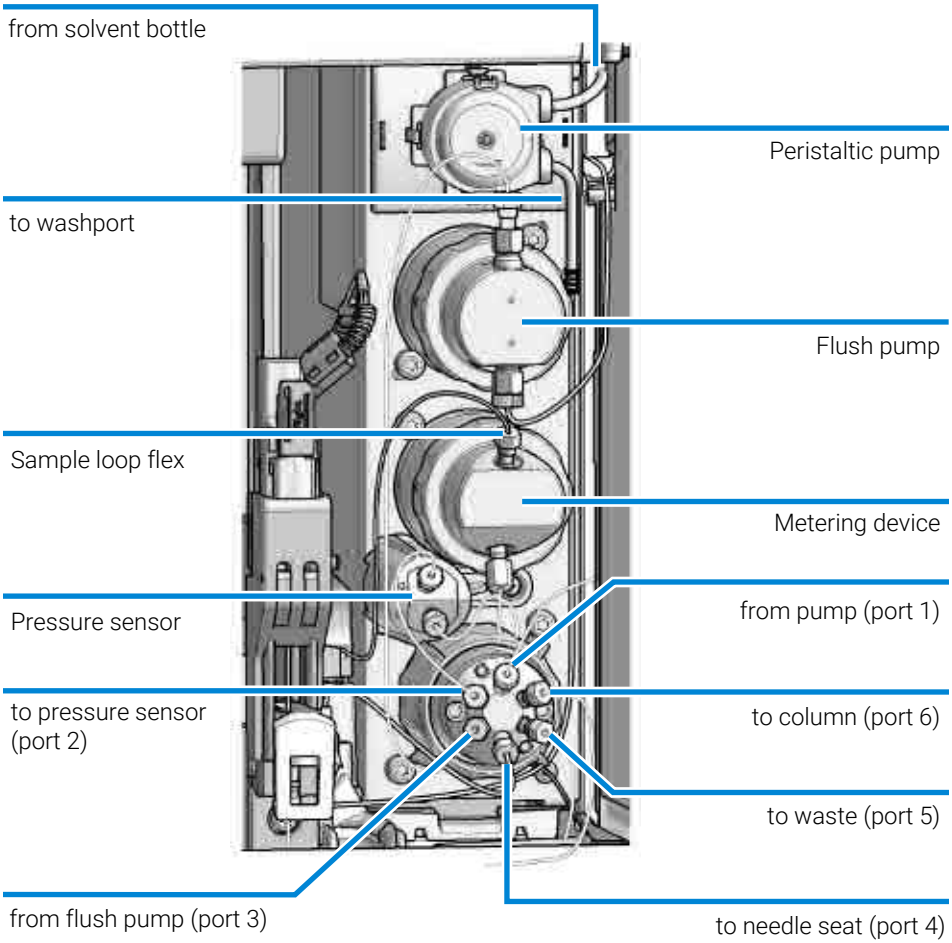


**Figure 11:** Flow connections for the SFC Multisampler (G4767A)

# Handling Leak and Waste

The Agilent InfinityLab LC Series has been designed for safe leak and waste handling. It is important that all security concepts are understood and instructions are carefully followed.

The solvent cabinet is designed to store a maximum volume of 8 L solvent. The maximum volume for an individual bottle stored in the solvent cabinet should not exceed 2 L. For details, see the usage guideline for the Agilent Infinity III Solvent Cabinets (a printed copy of the guideline has been shipped with the solvent cabinet, electronic copies are available on the Internet).

All leak plane outlets are situated in a consistent position so that all Infinity and Infinity II/III modules can be stacked on top of each other. Waste tubes are guided through a channel on the right hand side of the instrument, keeping the front access clear from tubes.

The leak plane provides leak management by catching all internal liquid leaks, guiding them to the leak sensor for leak detection, and passing them on to the next module below, if the leak sensor fails. The leak sensor in the leak plane stops the running system as soon as the leak detection level is reached.

Solvent and condensate is guided through the waste channel into the waste container:

- from the detector's flow cell outlet
- from the Multisampler needle wash port
- from the Sample Thermostat (condensate)
- from the pump's Seal Wash Sensor (if applicable)
- from the pump's Purge Valve or Multipurpose Valve

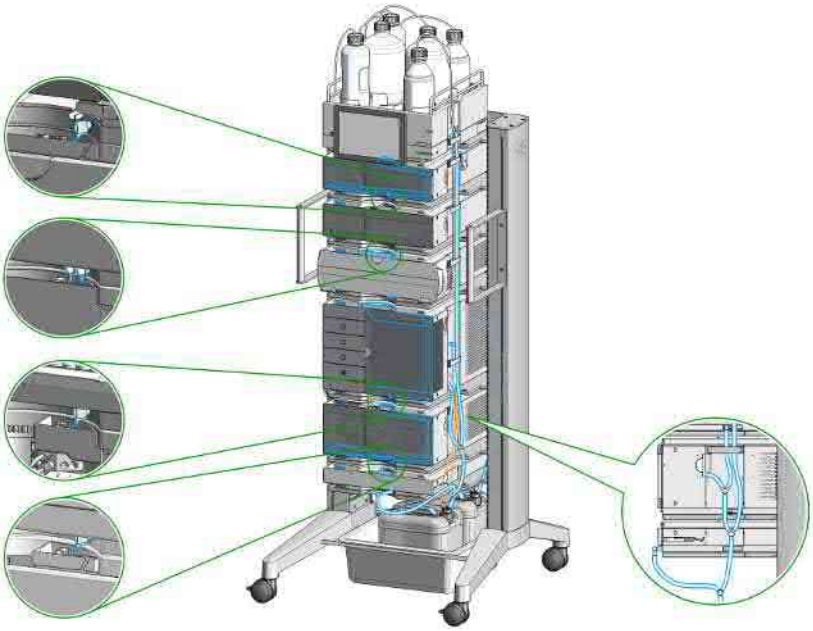

**Figure 12:** Infinity III Leak Waste Concept (Flex Bench installation)

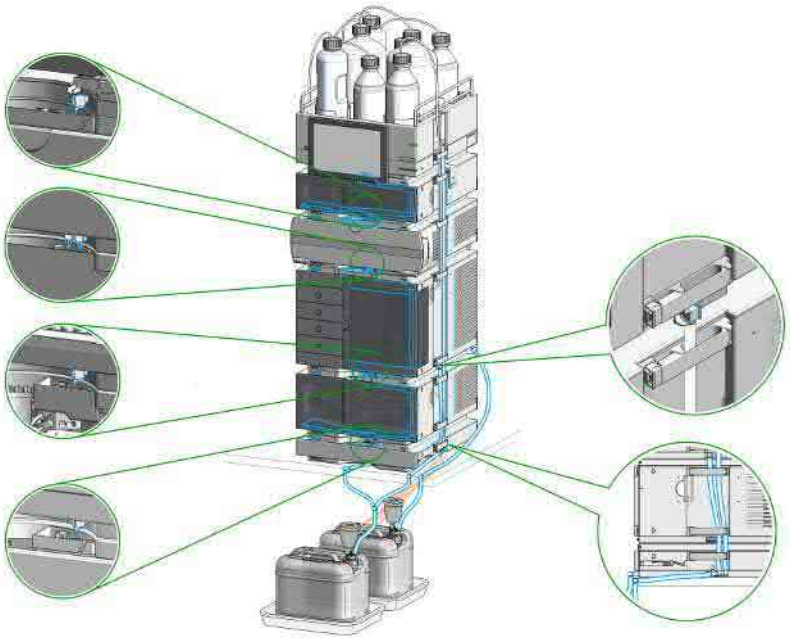

**Figure 13:** Infinity III Single Stack Leak Waste Concept (bench installation)

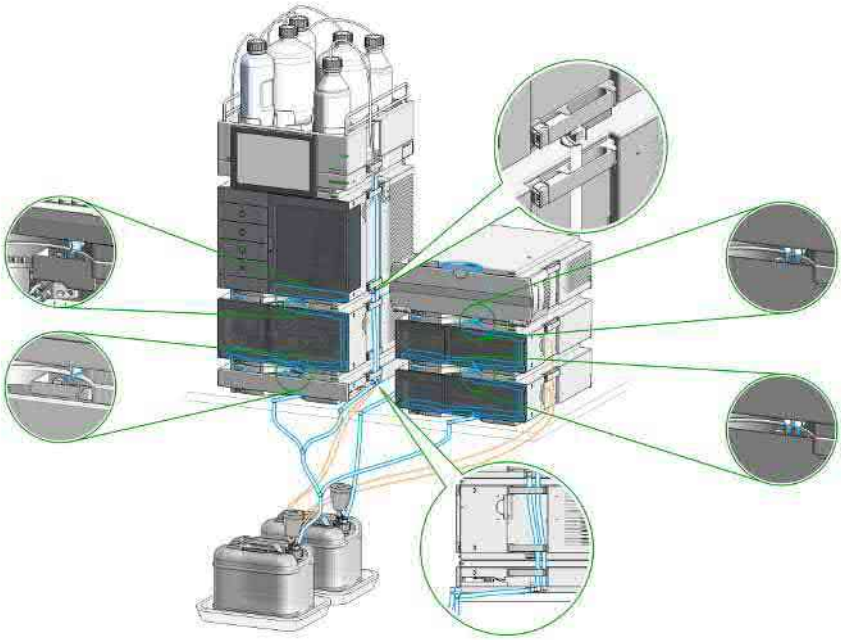

**Figure 14:** Infinity III Two Stack Leak Waste Concept (bench installation)

The waste tube connected to the leak plane outlet on each of the bottom instruments guides the solvent to a suitable waste container.

## Drain Connectors Installation

Drain Connectors have been developed to improve leak drainage for low flow leaks of high viscosity solvents (for example, isopropanol) in Agilent InfinityLab LC Series Systems. Install these parts to modules where they are missing (usually preinstalled).

- Make sure that dripping adapters are correctly installed on each module in the LC stack, excluding lowest module.
- Remove the dripping adapter if it is appeared to be installed on the lowest module in the LC stack and connect waste tube instead.
- Consider 5004-0000 (Drain Connectors Kit) if drain adaptor is missing on some module(s).

For illustration, see Handling Leak and Waste on page 53.

**Parts required**

| Qty. | p/n | Description |
|---|---|---|
| | 5004-0000 | Drain Connectors Kit |

### Content of Drain Connectors Kit (p/n 5004-0000)

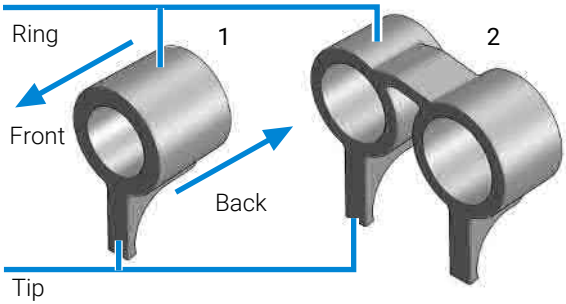


**Figure 15:** Overview of Drain Connectors: Single (left) and Double (right)

| Qty. | p/n | Description |
|---|---|---|
| Parts can be ordered only as a complete kit. | | |
| 3 | 5043-1834 | Single Drain Connector ID3.0-Long |
| 1 | 5043-1836 | Double Drain Connector-Long |

**Table 8:** Compatibility of drain connectors and modules

| Drain Connector Type | Compatible Module | Compatible Module Type |
|---|---|---|
| Double | G7116A/B | Column Compartment |
| Single | G7114A/B | Detector |
| | G7115A | |
| | G7117A/B/C | |
| | G7121A/B | |
| | G7162A/B | |
| | G7165A | |
| | G7129A/B/C | Sampler |
| | G7167A/B/C | |
| | G5668A | |
| | G7137A | |
| | G7157A | |
| | G4767A | |
| | G7122A | Degasser |
| | G7104A/C | Pump |
| | G7110B | |
| | G7111A/B | |
| | G7112B | |
| | G7120A | |
| | G7131A/C | |
| | G7132A | |
| | G5654A | |
| | G4782A | |

**Preparations**

- Leak drains of LC modules are clean and free of salt or solvent residuals.

**NOTE**

Do not install drain connectors on the bottom modules of the stack. Drain outlet of the bottom module has to be connected via waste tubing to a suitable waste container (see Leak and Waste Handling in the manual for a respective module).

**NOTE** In case of incorrect installation, drain connectors cannot fully perform the intended function.

**NOTE** It is not required to power off the HPLC stack to install Single and Double Drain Connectors. The installation of the connectors does not affect the analysis performed during the installation.

### Install the Double Drain Connector on the leak drain of the 1260 Infinity III Multicolumn Thermostat (G7116A)/ 1290 Infinity III Multicolumn Thermostat (G7116B)

1 Align the rings with the leak drain outlets of the module, press slightly with the fingers, and slide the connector along the leak drain outlets until it is aligned with the front of the leak drain.

### Install Single Drain Connectors on other modules in the LC stack

1 Align the ring with the leak drain outlet of the module, press slightly with the fingers, and slide the connector along the leak drain outlet until it is aligned with the front of the leak drain.

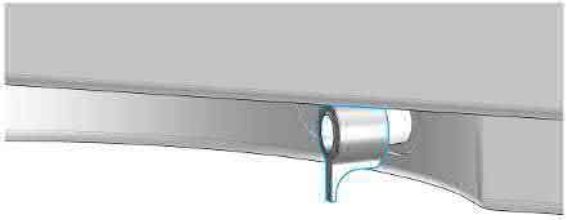

Make sure that the following requirements are covered:

- The tip of the drain connector points straight down.
- The leak drain outlets and the drain connectors are aligned properly.

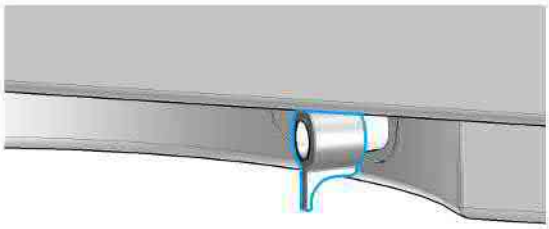

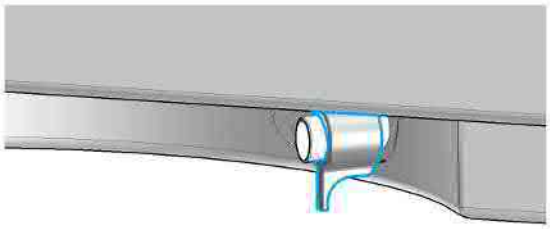

## SFC Waste Concept

1 Agilent recommends using the 5043-1221 (6 L waste can with 1 Stay Safe cap GL45 with 4 ports) for optimal and safe waste disposal. If you decide to use your own waste solution, make sure that the tubes don't immerse in the liquid.

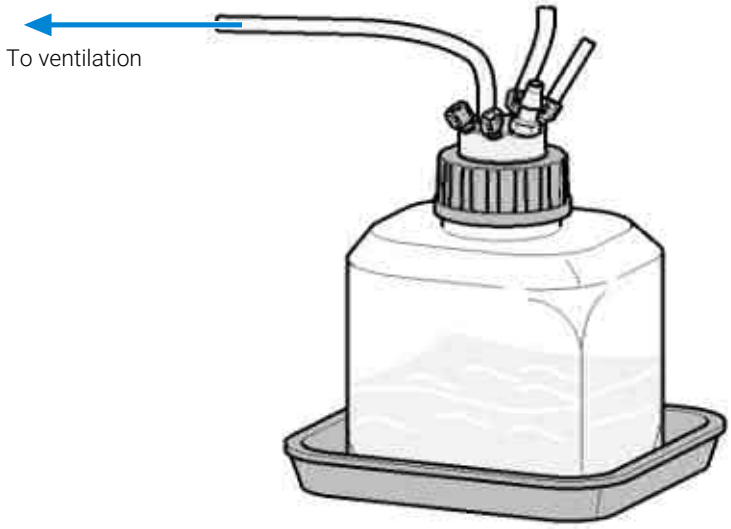

## Waste Guidance

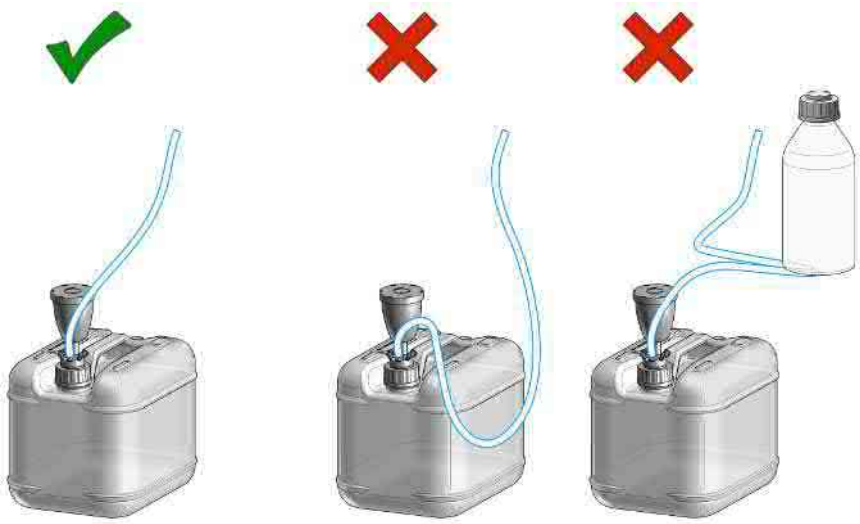

NOTE

The waste drainage must go straight into the waste containers. The waste flow must not be restricted at bends or joints.

## Leak Sensor

CAUTION

Solvent incompatibility

The solvent DMF (dimethylformamide) leads to corrosion of the leak sensor. The material of the leak sensor, PVDF (polyvinylidene fluoride), is incompatible with DMF.

- Do not use DMF as mobile phase.
- Check the leak sensor regularly for corrosion.

# 4 Using the Module

This chapter provides information on how to use the module.

**General Information 64**
Turn On/Off 64
Status Indicators 66

**Preparation of the System 68**
Prepare a Run 68
Prime and Purge the System 75

**Preparing the Module 77**
Insert Vial Trays/Wellplates 77
Remove Vial Trays/Wellplates 79
Reset the Multisampler in Case of an Error 81
Preparing the Multisampler 86
Recommended Mats and Vials 86
Configure Well Plate Types 89
Setting Up the Autosampler With OpenLab ChemStation 91

**Preparing the Optional Sample Thermostat 99**
Dashboard 99
Control Interface 100
Control 101
Temperature Mode 103
Online Signals 104
Reporting Sample Temperature 104
Operation Information 105

**Transporting the Sampler 108**
Prepare a Sampler Without Thermostat for Transportation 108
Prepare a Sampler With Thermostat for Transportation 108
Install the Transport Protection Foam 110

# General Information

## Turn On/Off

This procedure exemplarily shows an arbitrary LC stack configuration.

1

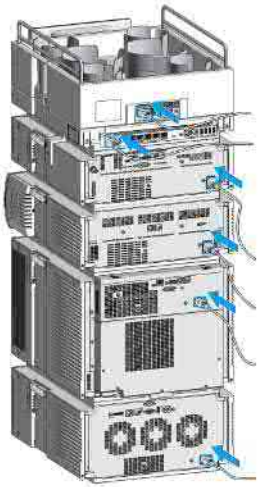

2 On/Off switch: On

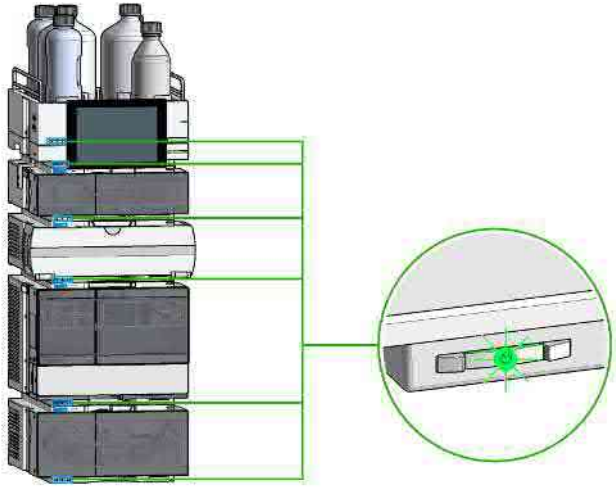

3 Turn instrument **On/Off** with the control software.

**4** On/Off switch: Off

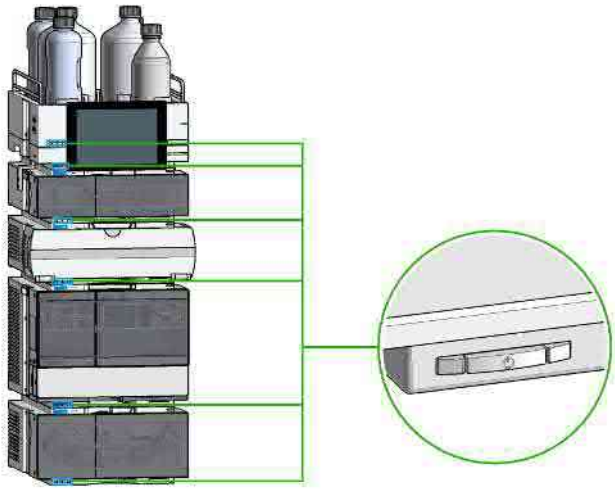

**5**

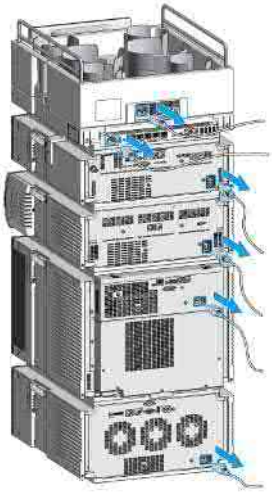

## Status Indicators

The module status indicator indicates one of six possible module conditions.

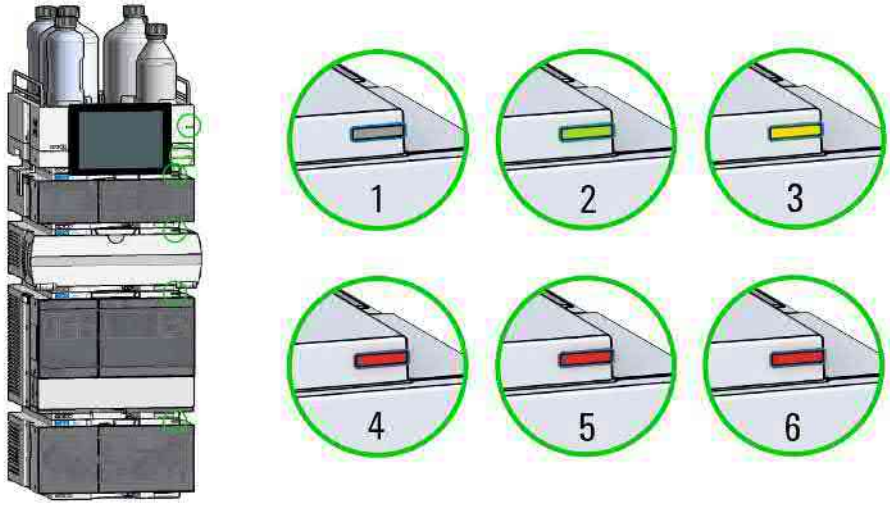


**Figure 16:** Arbitrary LC stack configuration (example)

| | |
|---|---|
| 1 | Idle |
| 2 | Run mode |
| 3 | Not-ready. Waiting for a specific pre-run condition to be reached or completed. |
| 4 | Error mode - interrupts the analysis and requires attention (for example, a leak or defective internal components). |
| 5 | Resident mode (blinking) - for example, during update of main firmware. |
| 6 | Bootloader mode (fast blinking). Try to re-boot the module or try a cold-start. Then try a firmware update. |

## InfinityLab Assist Hub Status Indicator

The Assist Hub status indicator displays the status of the entire system. If a module in the system is not ready (yellow), the Assist Hub status indicator also shows not ready (yellow). The same applies for the module conditions **Idle**, **Run mode**, and **Error mode**.

# Preparation of the System

## Prepare a Run

This procedure exemplarily shows how to prepare a run. Parameters as shown in the screenshots may vary, depending on the system installed.

**WARNING**

**Toxic, flammable and hazardous solvents, samples and reagents**

**The handling of solvents, samples and reagents can hold health and safety risks.**

- **When working with these substances observe appropriate safety procedures (for example by wearing goggles, safety gloves and protective clothing) as described in the material handling and safety data sheet supplied by the vendor, and follow good laboratory practice.**
- **Do not use solvents with an auto-ignition temperature below 200 °C (392 °F). Do not use solvents with a boiling point below 56 °C (133 °F).**
- **Avoid high vapor concentrations. Keep the solvent temperature at least 40 °C (72 °F) below the boiling point of the solvent used. This includes the solvent temperature in the sample compartment. For the solvents methanol and ethanol keep the solvent temperature at least 25 °C (45 °F) below the boiling point.**
- **Do not operate the instrument in an explosive atmosphere.**
- **Do not use solvents of ignition Class IIC according IEC 60079-20-1 (for example, carbon disulfide).**
- **Reduce the volume of substances to the minimum required for the analysis.**
- **Never exceed the maximum permissible volume of solvents (8 L) in the solvent cabinet. Do not use bottles that exceed the maximum permissible volume as specified in the usage guideline for solvent cabinet.**
- **Ground the waste container.**
- **Regularly check the filling level of the waste container. The residual free volume in the waste container must be large enough to collect the waste liquid.**
- **To achieve maximal safety, regularly check the tubing for correct installation.**

1 Switch on the detector.

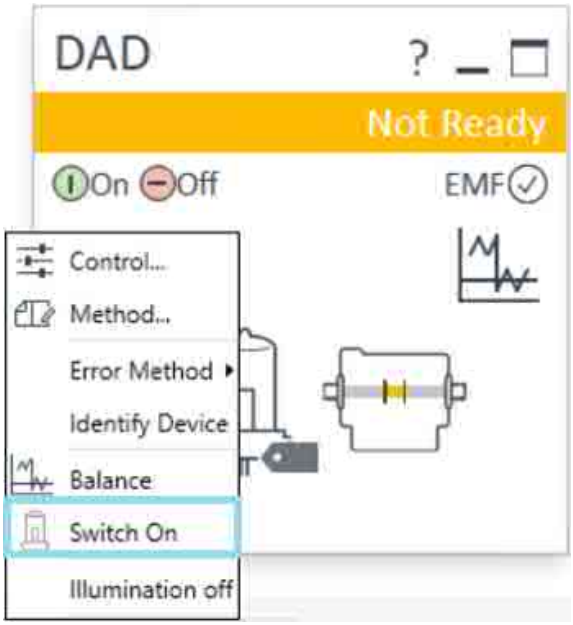


2 Fill the solvent bottles with adequate solvents for your application.

3 Place solvent tubings with bottle head assemblies into the solvent bottles.

4 Place solvent bottles into the solvent cabinet.

5 Solvent bottle filling dialog (in the software).

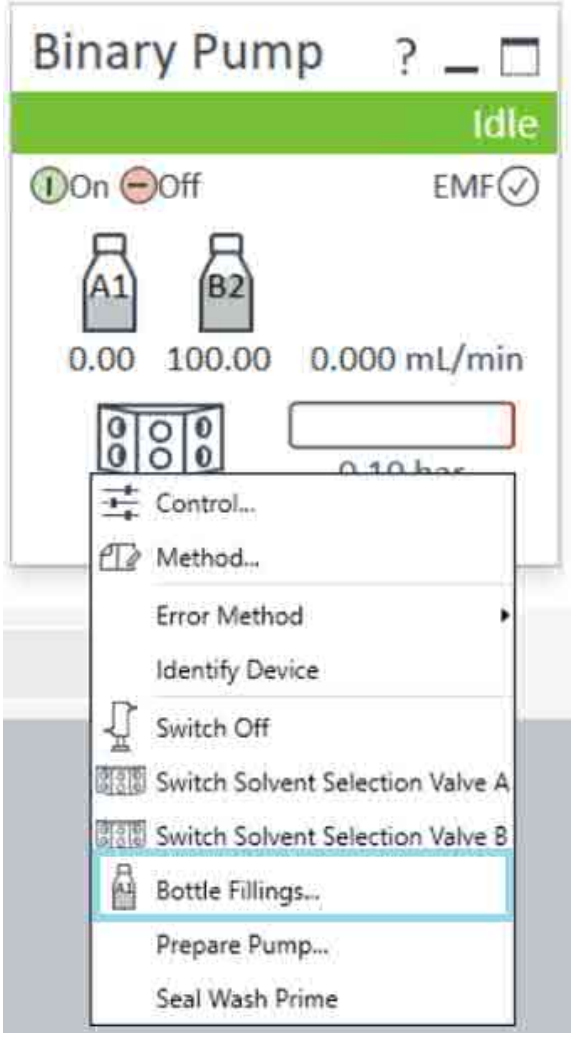

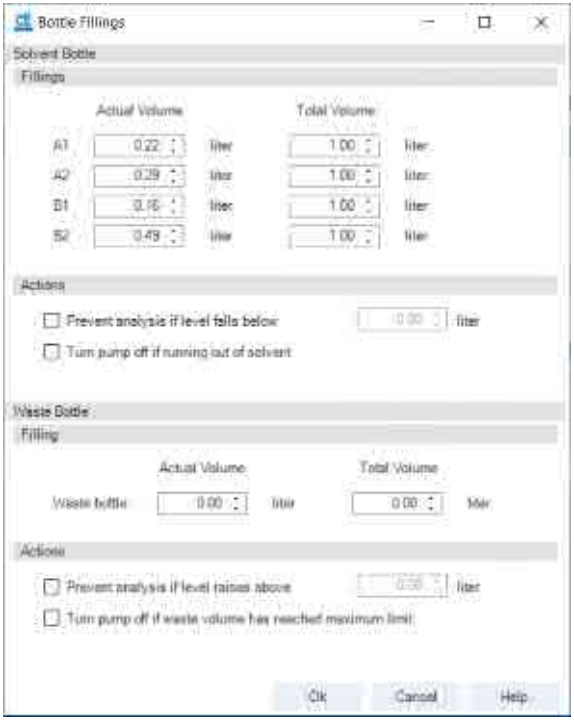


6 Purge the pump.

**NOTE**

For details on priming and purging, refer to the technical note *Best Practices for Using an Agilent LC System Technical Note (InfinityLab-BestPractice-en-SD-29000194.pdf, SD-29000194)*.

7 Change solvent type if necessary.

**8** Choose the tray format of the sampler.

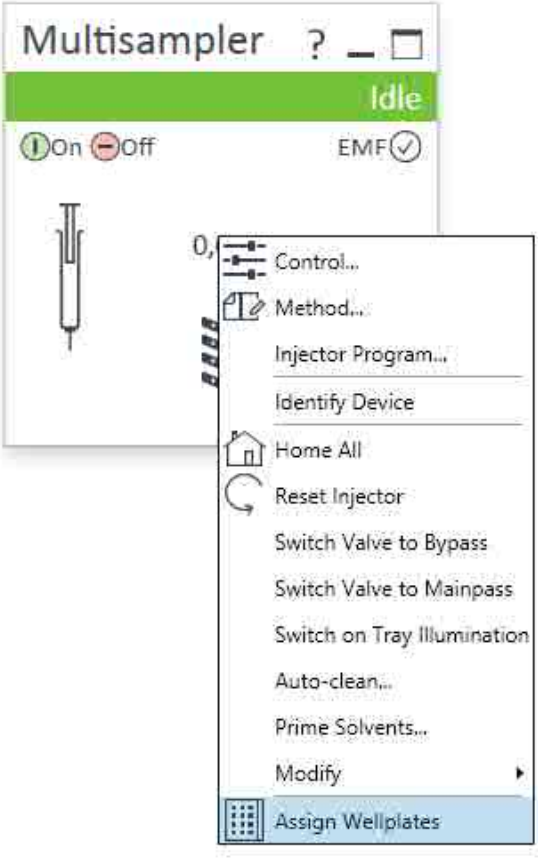


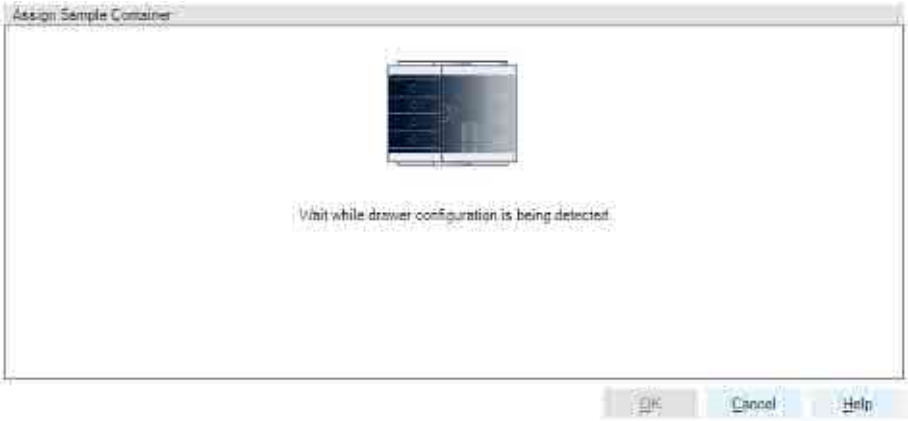

**9** Add a new column.

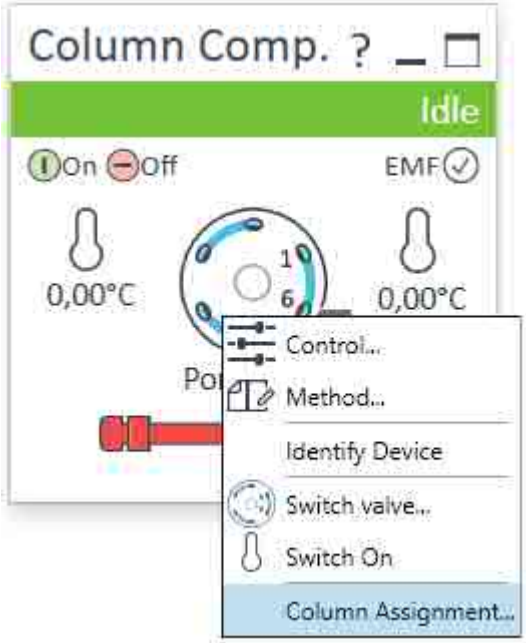


**10** Enter the column information.

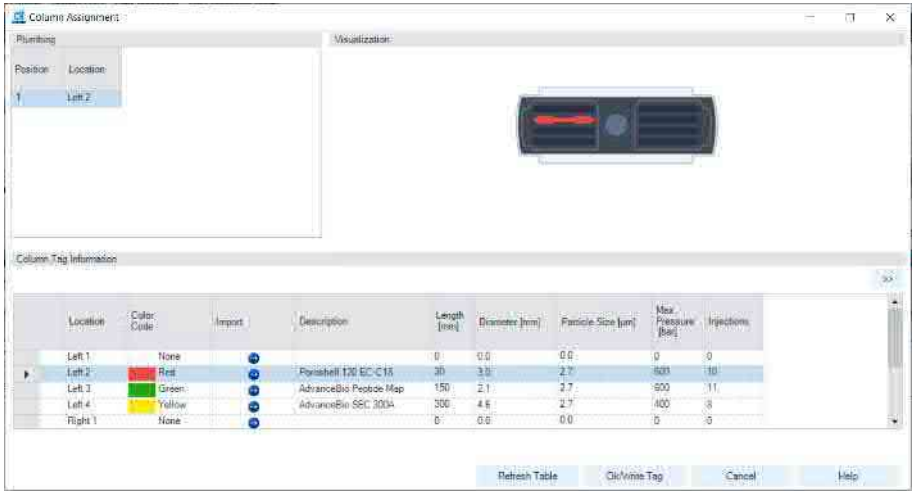

**11** Select the column in the Method settings of the column compartment.

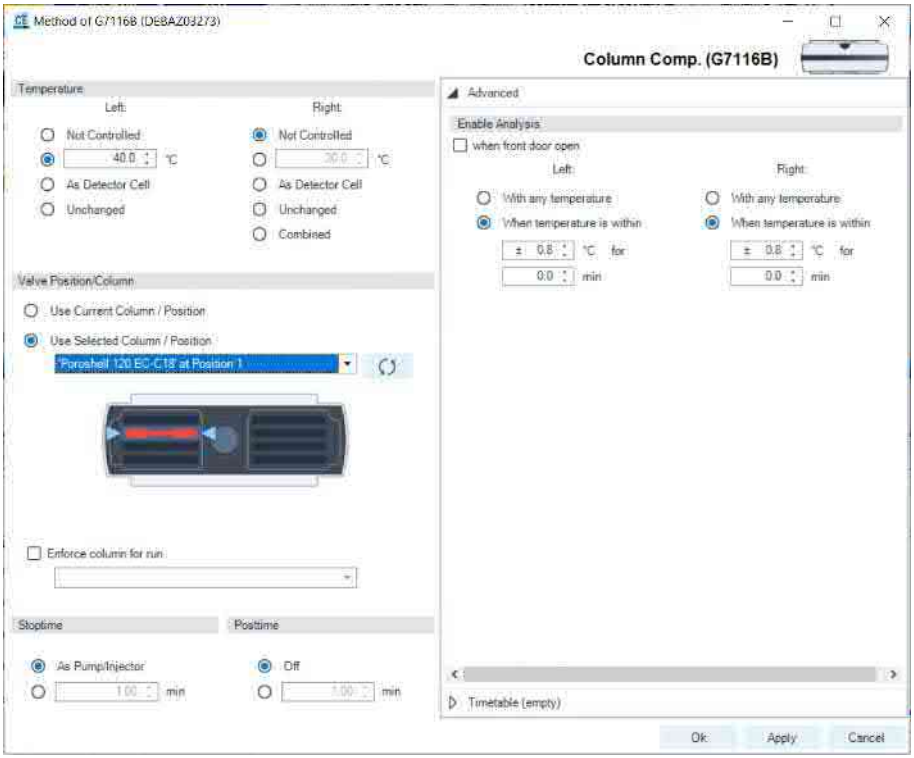


**12** Set the detector parameters according to the needs of your method.

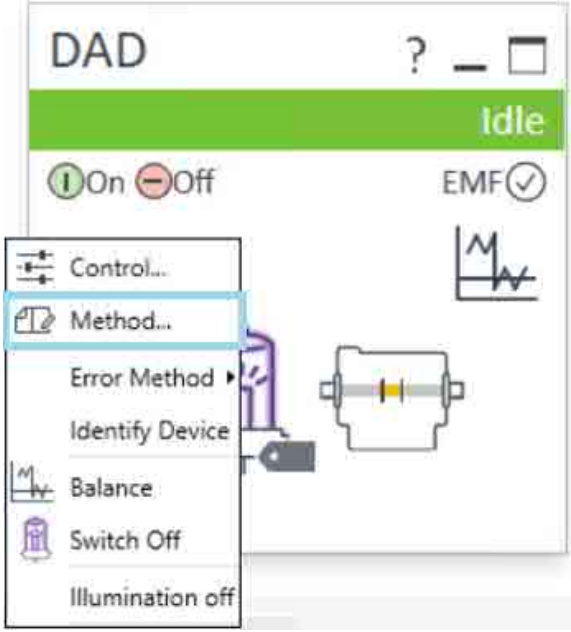
DAD
Idle
On
Off
EMF
Control...
Method...
Error Method
Identify Device
Balance
Switch Off
Illumination off

## Prime and Purge the System

When the solvents have been exchanged or the pumping system has been turned off for a certain time (for example, overnight) oxygen will re-diffuse into the solvent channel between the solvent reservoir, vacuum degasser (when available in the system) and the pump. Solvents containing volatile ingredients will slightly lose these. Therefore priming of the pumping system is required before starting an application.

**Table 9:** Choice of priming solvents for different purposes

| Activity | Solvent | Comments |
|---|---|---|
| After an installation | Isopropanol | Best solvent to flush air out of the system |
| When switching between reverse phase and normal phase (both times) | Isopropanol | Best solvent to flush air out of the system |
| After an installation | Ethanol or Methanol | Alternative to Isopropanol (second choice) if no Isopropanol is available |
| To clean the system when using buffers | Bidistilled water | Best solvent to re-dissolve buffer crystals |
| After a solvent change | Bidistilled water | Best solvent to re-dissolve buffer crystals |
| After the installation of normal phase seals (P/N 0905-1420) | Hexane + 5% Isopropanol | Good wetting properties |

**NOTE** The pump should never be used for priming empty tubings (never let the pump run dry). Use a syringe to draw enough solvent for completely filling the tubings to the pump inlet before continuing to prime with the pump.

1. Open the purge valve of your pump (by turning it counterclockwise) and set flow rate to 3 – 5 mL/min.
2. Flush all tubes with at least 30 mL of solvent.
3. Set flow to required value of your application and close the purge valve.

**NOTE** Pump for approximately 10 minutes before starting your application.

# Preparing the Module

## Insert Vial Trays/Wellplates

1

2

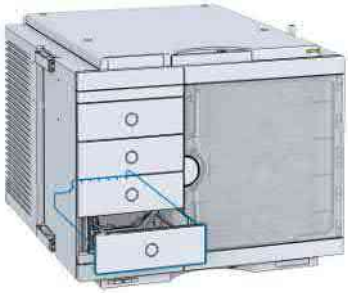

3

4 Check the orientation of the vial tray/wellplates and ensure correct seat by pressing down the plate. When the lever sensor has detected the plate correctly the front LED lights up and the device recognizes the assignment.

5

6

7 Configure the vial tray/wellplate type in the chromatographic data system (see Table 13 on page 92).

## Remove Vial Trays/Wellplates

1

2

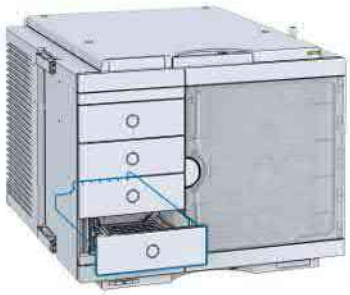

3

4

5

6

# Reset the Multisampler in Case of an Error

**When**

- In some cases the multisampler has to be reset by the user in order for the system to resume working in normal operation mode.

**WARNING**

**Risk of injury by uncovered needle**

**An uncovered needle is a risk of harm to the operator.**

- **Open the safety lock of the needle assembly *only* on the sample handler and for this particular procedure.**
- **Be careful working at the z-robot.**
- **Wear safety gloves when removing the needle assembly.**

## Resetting the Multisampler

1 Check the condition of the needle assembly and the sample loop. Replace them if necessary, see Remove the Needle Assembly and Remove the Sample Loop-Flex on page 259

**NOTE**

Take care that the needle is installed properly. The plastic adapter must be installed correctly and the sample loop should not be kinked.

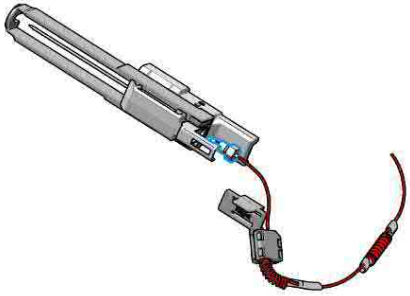

**WARNING**

**Risk of injury by uncovered needle**

**An uncovered needle is a risk of harm to the operator.**

- **Open the safety lock of the needle assembly *only* on the sample handler and for this particular procedure.**
- **Be careful working at the z-robot.**
- **Wear safety gloves when removing the needle assembly.**

2 Unlock the needle.

**NOTE**

This procedure is completely different than the standard PM replacement of the needle assembly in Lab Advisor. The safety lock of the needle assembly has to be released by carefully sliding the pusher upwards.

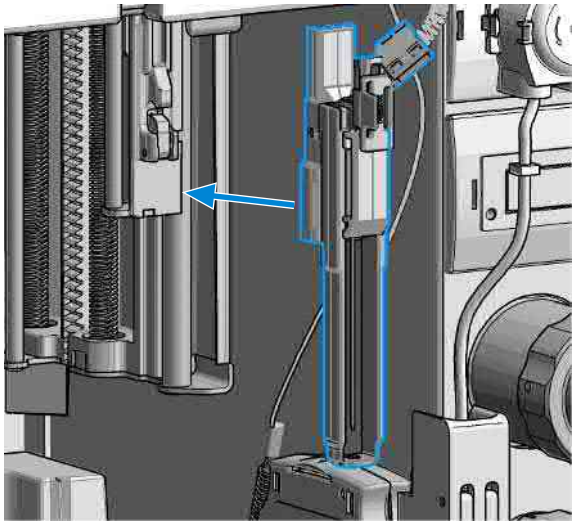

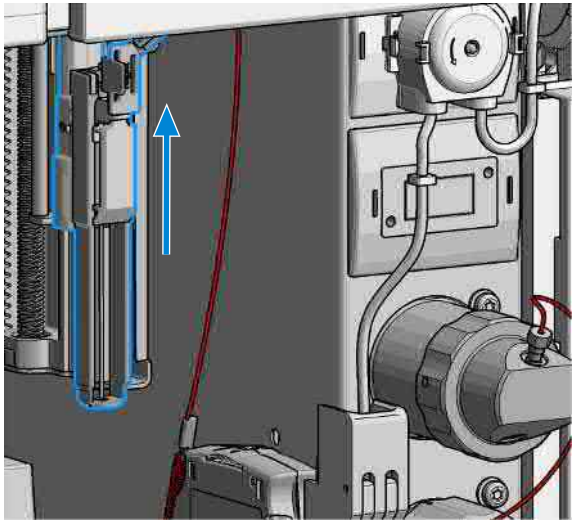

3 Verify that the needle assembly is unlocked after installation.

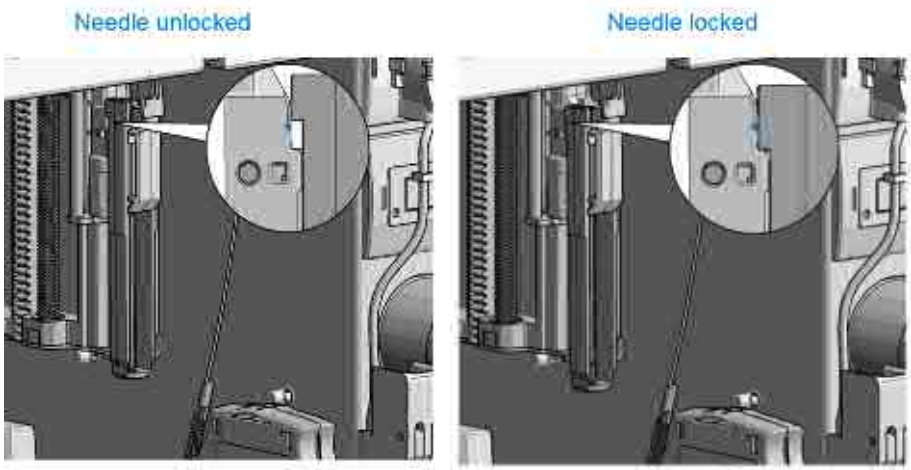


4 Reset the sampler (using the instrument control) or turn the instrument Off/ On again to start the initialization.

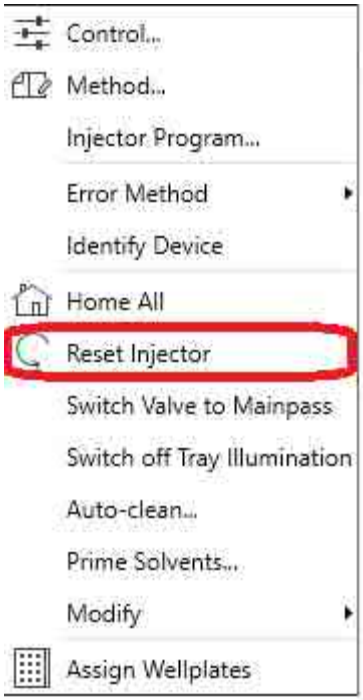

5 Close the front door.

6 Wait until the initialization of the sampler is completed.

7 If the error persists, contact your local service representive.

## Preparing the Multisampler

For best performance of the Multisampler

- When using the Multisampler in a system with a vacuum degassing unit, shortly degas your samples before using them in the Multisampler.
- Filter samples before use in an InfinityLab LC Series system. Use 5067-6189 (InfinityLab Inline Filter (0.3 µm)) for inline filtering.

  **NOTE:** This inline filter contains stainless steel and is not indicated for use in bio-inert or biocompatible systems.
- When using buffer solutions, flush the system with water before switching it off.
- Check the Multisampler plungers for scratches, grooves, and dents when changing the piston seal. Damaged plungers cause micro leaks and will decrease the lifetime of the seal.
- Solvent Information: Observe recommendations on the use of solvents, see Solvent Information on page 341.

## Recommended Mats and Vials

**Table 10:** Recommended plates and closing mats

| Part Number (Description) | Rows | Columns | Plate height (mm) | Volume (µL) | Package | Closing mat compatibility |
|---|---|---|---|---|---|---|
| 384Corning (No Agilent PN) | 16 | 24 | 14.4 | 80 | | |
| 384Nunc (No Agilent PN) | 16 | 24 | 14.4 | 80 | | |
| 5042-8502 (96-well plate, box of 25 sample plates) | 8 | 12 | 17.3 | 150 | 25 | 5042-1389 (Closing mat for all 96 Agilent plates) |

| Part Number (Description) | Rows | Columns | Plate height (mm) | Volume (µL) | Package | Closing mat compatibility |
|---|---|---|---|---|---|---|
| 5065-4402 (96CappedAgilent ) | 8 | 12 | 47.1 | 300 | 1 | 5042-1389 (Closing mat for all 96 Agilent plates) |
| 96Corning (No Agilent PN) | 8 | 12 | 14.3 | 300 | | |
| 96CorningV (No Agilent PN) | 8 | 12 | 14.3 | 300 | | |
| 96DeepNunc31mm (No Agilent PN) | 8 | 12 | 31,5 | 1000 | | |
| 96DeepRitter41mm (No Agilent PN) | 8 | 12 | 41.2 | 800 | | |
| 96Greiner (No Agilent PN) | 8 | 12 | 14.3 | 300 | | |
| 96GreinerV (No Agilent PN) | 8 | 12 | 14.3 | 250 | | |
| 96Nunc (No Agilent PN) | 8 | 12 | 14.3 | 400 | | |
| 5043-9300 (Well plate 96/2.2 mL, square wells, U shape, PP, 41 mm, 30/pk) | 8 | 12 | 41 | 2200 | 30 | 5043-9319 (Mat 96 wells, square, pierceable, silicone 50/pk) |
| 5043-9302 (Well plate 96/2.0 mL, round wells, U shape, PP, 45 mm, 30/pk) | 8 | 12 | 45.3 | 2000 | 30 | 5043-9317 (Mat 96 wells, round, pierceable, silicone 50/pk), 5043-9318(Mat 96 wells, round, piercable, silicone 100/pk) |
| 5043-9305 (Well plate 96/1.0 mL, round wells, U shape, PP, 32 mm, 50/pk) | 8 | 12 | 32 | 1000 | 50 | 5043-9317 (Mat 96 wells, round, pierceable, silicone 50/pk), 5043-9318 (Mat 96 wells, round, piercable, silicone 100/pk) |
| 5043-9308 (Well plate 96/1.2 mL, round wells, U shape, PP, 27 mm, 25/pk) | 8 | 12 | 27 | 1200 | 25 | 5043-9317 (Mat 96 wells, round, pierceable, silicone 50/pk), 5043-9318(Mat 96 wells, round, piercable, silicone 100/pk) |
| 5043-9309 (Well plate 96/1.2 mL, round wells, U shape, PP, 27 mm, 50/pk) | 8 | 12 | 27 | 1200 | 50 | 5043-9317 (Mat 96 wells, round, pierceable, silicone 50/pk), 5043-9318 (Mat 96 wells, round, piercable, silicone 100/pk) |

| Part Number (Description) | Rows | Columns | Plate height (mm) | Volume (µL) | Package | Closing mat compatibility |
|---|---|---|---|---|---|---|
| 5043-9310 (Well plate 96/0.5 mL, round wells, U shape, PP, 14 mm, 30/pk) | 8 | 12 | 14 | 500 | 30 | 5043-9317 (Mat 96 wells, round, pierceable, silicone 50/pk), 5043-9318 (Mat 96 wells, round, piercable, silicone 100/pk) |
| 5043-9311 (Well plate 96/0.5 mL0.5 mL, round wells, U shape, PP, 14 mm, 120/pk | 8 | 12 | 14 | 500 | 120 | 5043-9317 (Mat 96 wells, round, pierceable, silicone 50/pk), 5043-9318 (Mat 96 wells, round, piercable, silicone 100/pk) |
| 5043-9312 (Well plate 96/0.33 mL, round wells, V shape, PP, 14 mm, 25/pk) | 8 | 12 | 14 | 330 | 25 | 5043-9317 (Mat 96 wells, round, pierceable, silicone 50/pk), 5043-9318 (Mat 96 wells, round, piercable, silicone 100/pk) |
| 5043-9313 (Well plate 96/0.33 mL, round wells, V shape, PP, 14 mm, 50/pk) | 8 | 12 | 14 | 330 | 50 | 5043-9317 (Mat 96 wells, round, pierceable, silicone 50/pk), 5043-9318 (Mat 96 wells, round, piercable, silicone 100/pk) |
| 5043-9314 (Well plate 96/0.33 mL, round wells, V shape, PP, 14 mm, 100/pk) | 8 | 12 | 14 | 330 | 100 | 5043-9317 (Mat 96 wells, round, pierceable, silicone 50/pk), 5043-9318 (Mat 96 wells, round, piercable, silicone 100/pk) |
| 5043-9315 (Well plate 384/0.19 mL, square wells, V shape, PP, 22 mm, 25/pk) | 16 | 24 | 22 | 190 | 25 | 5043-9320 (Mat 384 wells, square, pierceable, silicone 50/pk) |

**Table 11:** Recommended vial plates

| Description (part number) | Rows | Columns | Plate height (mm) | Volume (µL) | Package |
|---|---|---|---|---|---|
| G2255-68700 (Vial plate for 54 x 2 mL vials (6/pk)) | 6 | 9 | 36 | 2000 | 6 |
| 5023-2471 (Vial plate 40 x 2 mL vials) | 5 | 8 | 43 | 2000 | 1 |
| 5022-6539 (Vial plate for 15 x 6 mL vials (1/pk)) only compatible with 3H drawers | 3 | 5 | 42 | 6000 | 1 |
| 5022-6538 (Vial plate for 27 Eppendorf tubes (1/pk)) | 3 | 9 | 40 | 500 – 2000 | 1 |

**NOTE** For good chromatographic results the maximum filling should not exceed 3/4 of the total volume of the vial.

**NOTE** Agilent Technologies recommends to use preslit septa.

**NOTE** Bottom sensing is a feature to detect the depth of vials or plates via the software. If the bottom sensing feature is used, the bottom of the plates and vials must resist the needle. Make sure that the material supports this feature. Inserts with flexible support should not be used.

**NOTE** The default needle height offset value (0 mm) equates to an approximate distance of 2 mm above the bottom of a wellplate or a standard 2 mL vial at the reference bar, whereas it corresponds to an approximate distance of 5 mm above the bottom of a standard 2 mL vial in a vial tray. Using vial inserts or high recovery vials will impact the apparent distance between the needle tip and the bottom of the vessel.

**NOTE** In case of custom-made wellplates or vials, please keep in mind the physical limitations of each drawer.
The maximum total height allowed (including sample container and vial caps, if present) is:
1H: 19 mm
2H: 45 mm
3H: 50 mm

**NOTE** Adhesive foils are not recommended to seal wellplates. Alternatively, plates can be sealed with a 06644-001 (Pierceable aluminium foil) .

## Configure Well Plate Types

If the plate you are using is not found on the Recommended Mats and Vials on page 86 you may configure a custom plate. Measure the exact dimensions of the plate as marked below and enter the values in the plate configuration table of the chromatographic data system.

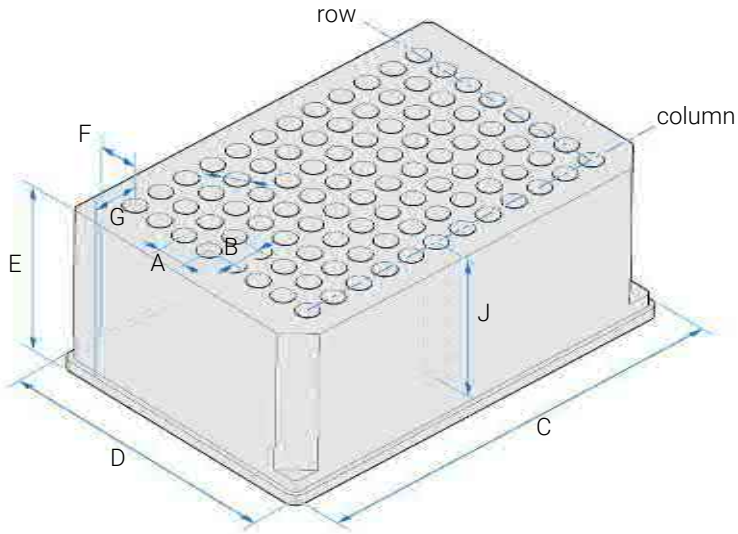


**Figure 17:** Well Plate Dimensions (straight)

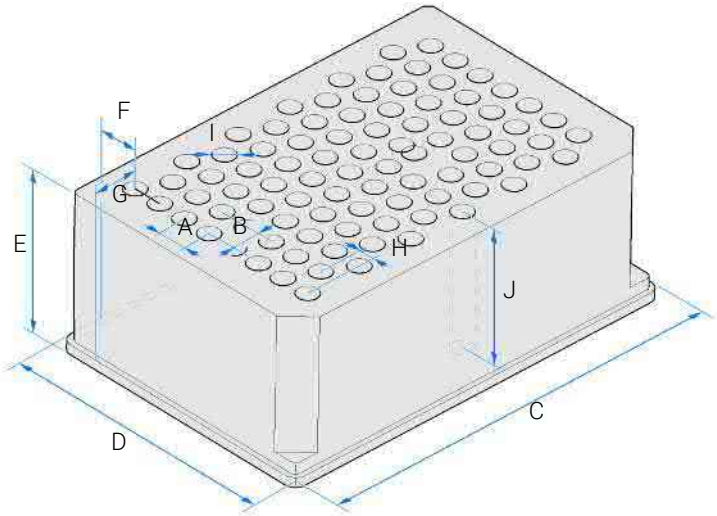


**Figure 18:** Well Plate Dimensions (staggered)

**Table 12:** Well Plate Dimensions

| Location | Description | Definition | Limits |
|---|---|---|---|
| | Rows | Number of rows on the plate | up to 16 |
| | Columns | Number of columns on the plate | up to 24 |
| | Volume | Volume (in µl) of a sample vessel | |
| A | Row distance | Distance (in mm) between the center of two rows | |
| B | Column distance | Distance (in mm) between the center of two columns | |
| C | Plate length | X size (in mm) at the bottom of the plate | 127.75+/- 0.25 mm (SBS Standard) |
| D | Plate width | Y size (in mm) at the bottom of the plate | 85.50+/-0.25 mm (SBS Standard) |
| E | Plate height | Size (in mm) from the bottom to the top of the plate | up to 47 mm |
| F | Row offset | Distance (in mm) from the back edge (bottom) to the center of the first hole (A1) | |
| G | Column offset | Distance (in mm) from the left edge (bottom) to the center of the first hole (A1) | |
| H | Column shift | Offset (in mm) to Y when the rows are not straight but staggered | |
| I | Well diameter | Diameter (in mm) of the well | at least 4 mm |
| J | Well depth | Distance (in mm) from the top of the plate to the bottom of the well | up to 45 mm |

**NOTE**

The distances need to be measured with high precision. It is recommended to use calipers.

## Setting Up the Autosampler With OpenLab ChemStation

The setup of the Multisampler is shown with the Agilent OpenLab CDS ChemStation Edition C.01.06. Depending on the controller (e.g. Local Controller, OpenLab CDS EZChrom Edition, Masshunter) the screens look different.

**NOTE** This section describes the autosampler settings only. For information on Agilent OpenLab CDS ChemStation Edition or other InfinityLab LC Series modules refer to the corresponding documentation.

**Figure 19:** ChemStation Method and Run Control

After successful load of the OpenLab CDS ChemStation Edition, you should see the module as an active item in the graphical user interface (GUI).

**Table 13:** The Autosampler User Interface

| | |
|---|---|
| 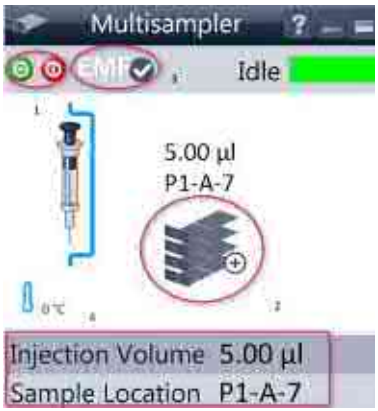 | Within the Multisampler user interface, there are active areas. If you move the mouse cursor across the icons (tray, EMF button), the cursor will change and you may click on the icon to<br>1. Turn on/off the autosampler<br>2. Configure the sample hotel<br>3. Get the status of the **EMF** (Early Maintenance Feature)<br>4. Sample Thermostat Temperatur<br><br>Current instrument information on:<br>• Injection volume<br>• Sample location |

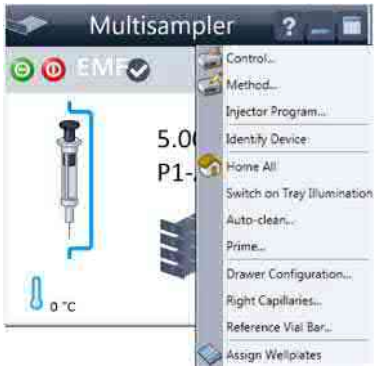


A right-click into the Active Area will open a menu to

- Show the **Control** User Interface (special module settings)
- Show the **Method** User interface (same as via menu **Instrument** > **Set up Instrument Method** > **Setup G7167B** )
- Injector Program
  When you activate a pretreatment/injector program, it replaces the standard injection cycle.
- Identify Device
- Home All
- Switch on Tray Illumination
- Auto Clean
- Prime
- Modify
  - Drawer Configuration

    Changing the load capacity of the Sample Hotel
  - Capillaries

    Changing Sample Loop, Needle Seat, and bypass capillary configuration
  - Reference Vial Rack
- Assign Wellplates
  Wellplate Configuration (same as click on the Tray icon)
  **NOTE:** For customizing a wellplate in the CDS, click on **Define Sample Containers** in the instrument configuration view.

**Module Status** shows Run / Ready / Error state and “Not Ready text” or “Error text”

- **Error** (Red)
- **Not ready** (yellow)
- **Ready** (green)
- **Pre run**, **Post run** (purple)
- **Run** (blue)
- **Idle** (green)
- **Offline** (dark gray)
- **Standby** (light gray)

EMF Status shows Run / Ready / Error state and “Not Ready text” or “Error text”

- Offline (gray)
- Ok
  No Maintenance required (green)
- EMF warning. Maintenance might be required (yellow)
- EMF warning. Maintenance required (red)

**NOTE**

The multisampler configuration is done in the module dashboard context menu, not in the instrument configuration.

## Control Settings

The control settings are available via right click on the active area of the graphical user interface.

**Table 14:** Control settings

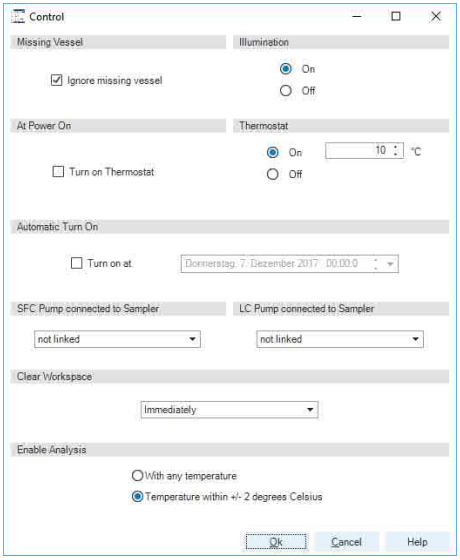


Control settings

The Sampler control parameters are in the following sections:

- Missing Vial
  Mark the **Ignore missing vial** check box to specify that, if a vial is missing, the injector ignores it and continues with a 6-second dummy run. The message "Missing vial <x>" is logged, and the system continues with the next injection.
- Illumination
  Toggles the illumination of the sample area, On or Off.
- At Power On
  The section is available when a thermostat is installed and configured. Mark the **Turn on Thermostat** check box to specify that the thermostat is switched on automatically when the instrument is switched on.
- Thermostat
  The section is available when a thermostat is installed and configured and the Constant temperature mode is selected.
  Select **On** to switch on the thermostat. Specify the required temperature in the adjacent field. The specified temperature must be at least 5 °C below ambient for proper temperature control.
  Select **Off** to switch off the thermostat.
- Automatic Turn On
  You can set a date and time at which the thermostat switches on automatically.
- Pump connected to Sampler
  Use this section to specify the pump that is used with the Sampler. If more than one pump is configured, display the drop-down list and select the appropriate pump from the list.
- Clear Workspace
  **Immediately** Returns the sample container on the workspace to its position in the sample hotel immediately after the injection has been completed. This allows you to quickly retrieve the sample container for further processing.
  **At End of Analysis** Returns the sample container on the workspace to its position in the sample hotel after the current run or sequence/worklist has been completed. This is the default setting.
  **Never** Leaves the sample container on the workspace until a different sample container is required to replace it.
- Enable Analysis
  This feature requires LC & CE Drivers A.02.19 or newer and is only available for the Sample Thermostat. With this function, you can specify if the analyses should start **With any temperature** or only when the **Temperature is within ± 2 °C** range of the setpoint temperature.
  **NOTE:** The Enable Analysis section is disabled when Not controlled is selected in the Temperature section.

**NOTE** For additional help and support, highlight the desired area and press the **F1** key. A help screen will open with additional information and documentation about the topic.

## Method Parameter Settings

These settings are available via **Menu** > **Instrument** > **Set up Instrument Method Multisampler** or via right click on the Active area.

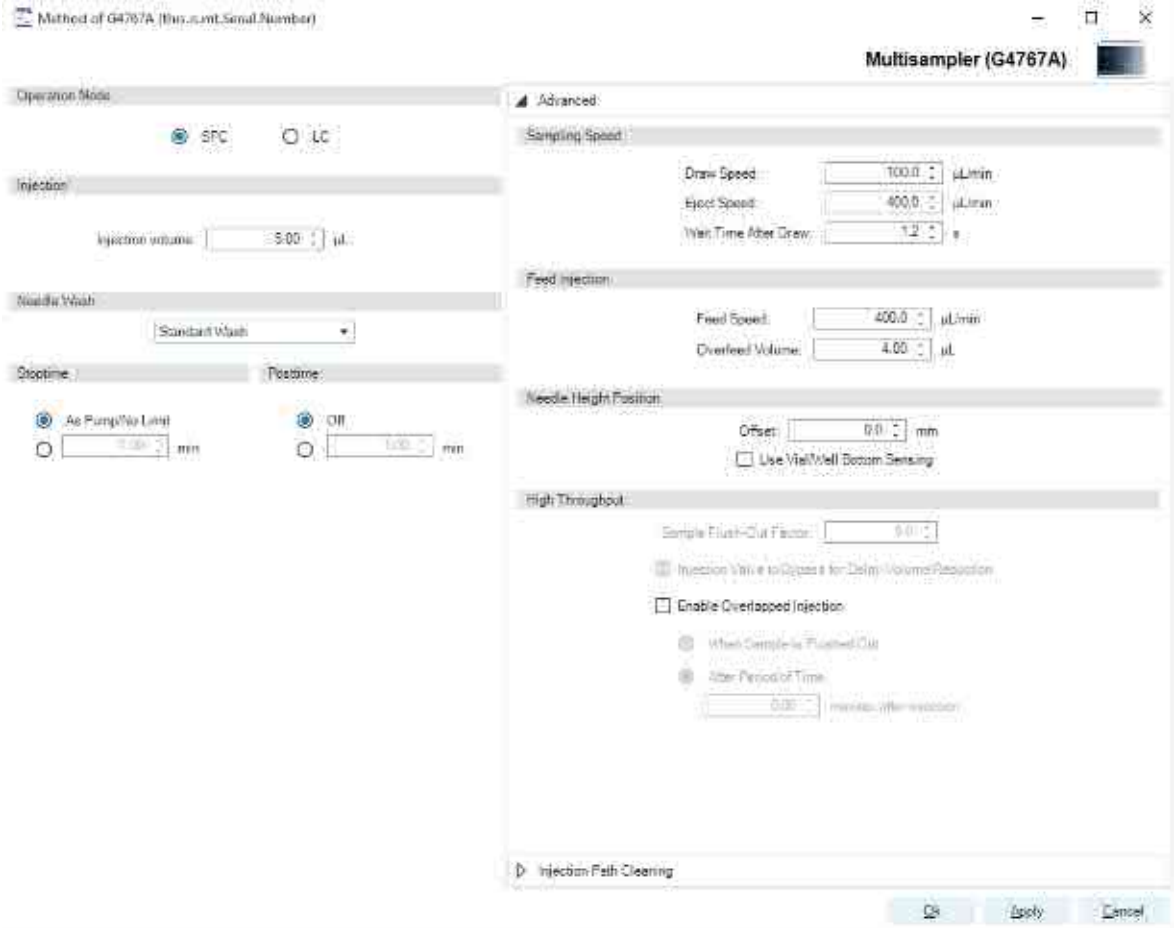


**Figure 20:** SFC Sampler method parameters

**NOTE** Usually default draw offset = 0 equates to 2 mm above the wellplate bottom.

**NOTE** For additional help and support. Highlight the desired cell and press the **F1** key. A help screen will open with additional information and documentation about the topic.

**Operation Mode SFC/LC**
It is possible to select between **SFC** and **LC** operation mode.

**Injection** Mode/ **Needle Wash**
The settable **Injection volume** is depending on what kind of configuration is installed. Default configuration 0.1 – 20 µL. It is possible to select between using the **Standard Wash** or **Standard Wash off**. Using needle wash is one option to obtain minimum carry-over.

**Stoptime/Posttime**
A Multisampler **Stoptime** can be set. For equilibration of the Multisampler a **Posttime** can be set.

**NOTE**

It takes approximatly 30 s to fully exchange one solvent for another in the flushport. To flush and exchange the solvent in the needle seat it takes 18 s. Additionally it is strong recommended to use Auto-Clean function to flush the module regularly with all installed solvents.

## Module Configuration View for Single Needle

The settings are available via menu **Instrument** > **Instrument Configuration** > **Multisampler Configuration** .

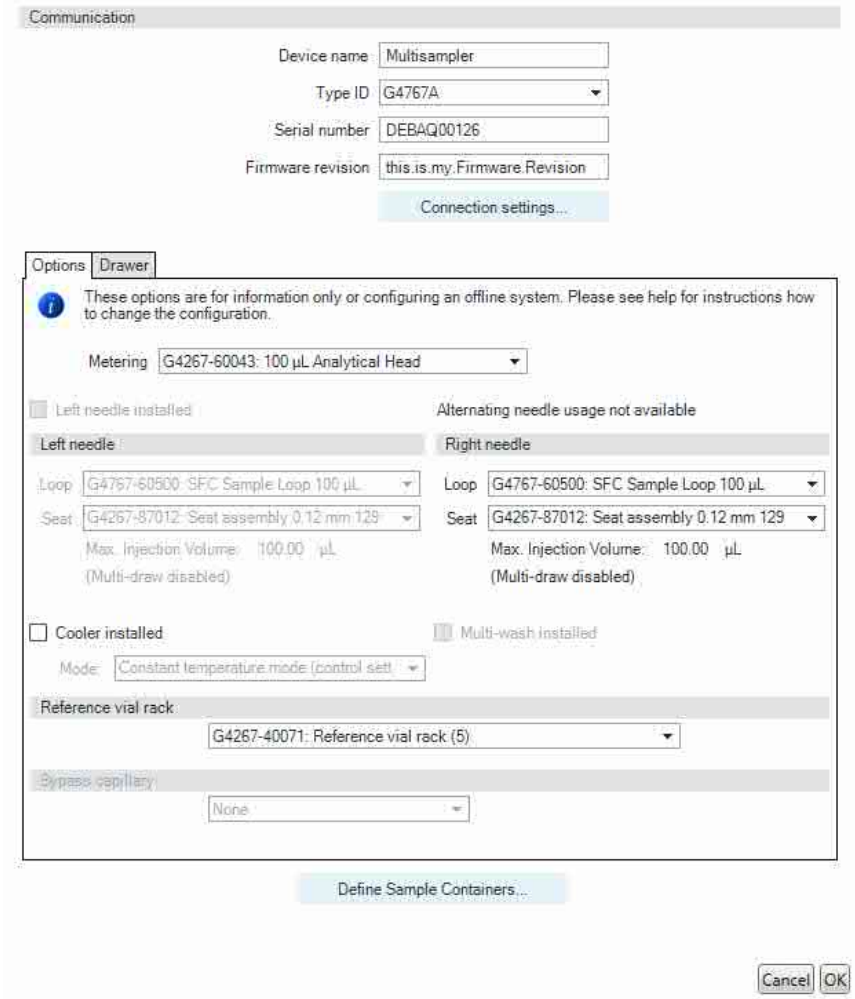


Configuration view (single needle)

- **Device name**: based on the module.
- **Type ID**: based on the module (product number). Some modules may allow changing the type based on hardware/firmware. This results in a change of features and functions.
- **Serial number**: based on the module.
- **Firmware revision**: based on the module.
- **Options**: lists installed options.

**NOTE** Changes in the sampler configuration can only be done in the online view of the CDS system, see Table 13 on page 92.

# Preparing the Optional Sample Thermostat

The following section describes how to operate the Agilent InfinityLab Sample Thermostat using the Multisampler as an example for the hosting sampler. The operation principle is the same for any other sampler type.

## Dashboard

Within the autosampler GUI, there are active areas. If the mouse cursor is moved across the icons the cursor will change, see the following figure.

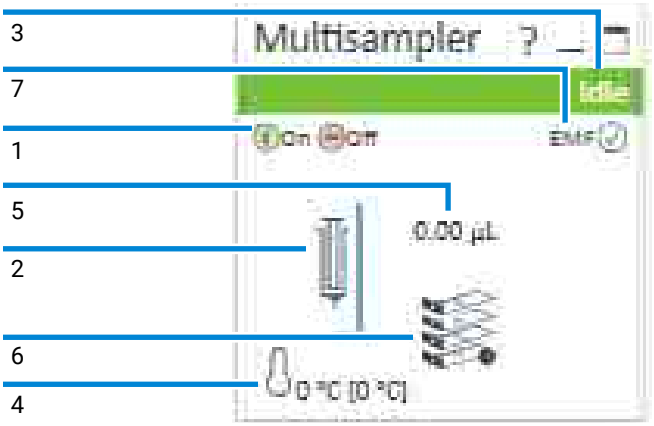


| | |
|---|---|
| 1 | ALS: turn on and off |
| 2 | ALS configuration |
| 3 | ALS Status |
| 4 | Chiller Status (on/off) |
| 5 | Injection Volume |
| 6 | Drawer Configuration |
| 7 | EMF Status |

ALS configuration is displayed when moving with the mouse cursor over the syringe. The information provides ALS related information like

- Part number
- ALS setup

and other details.

## Control Interface

Right-clicking the sampler GUI will prompt the control interface, where control and method parameters can be edited, configuration modified, and special commands executed.

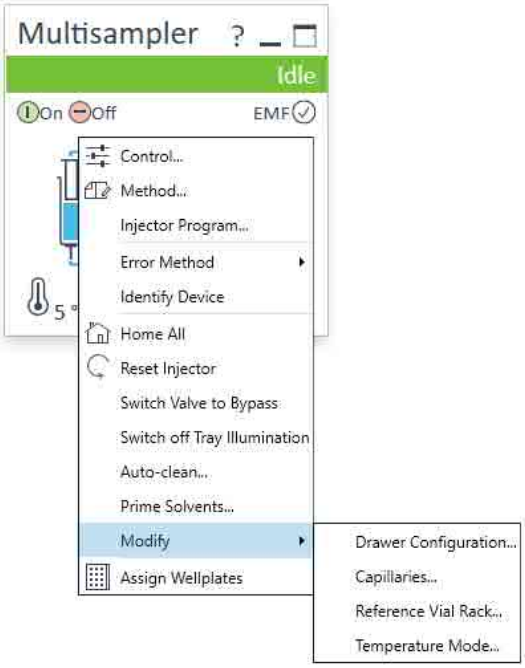

## Control

The **Thermostat** section of the **Control** dialog box is available when you have a cooler or thermostat installed. It allows you to switch the cooler/thermostat on and off manually.

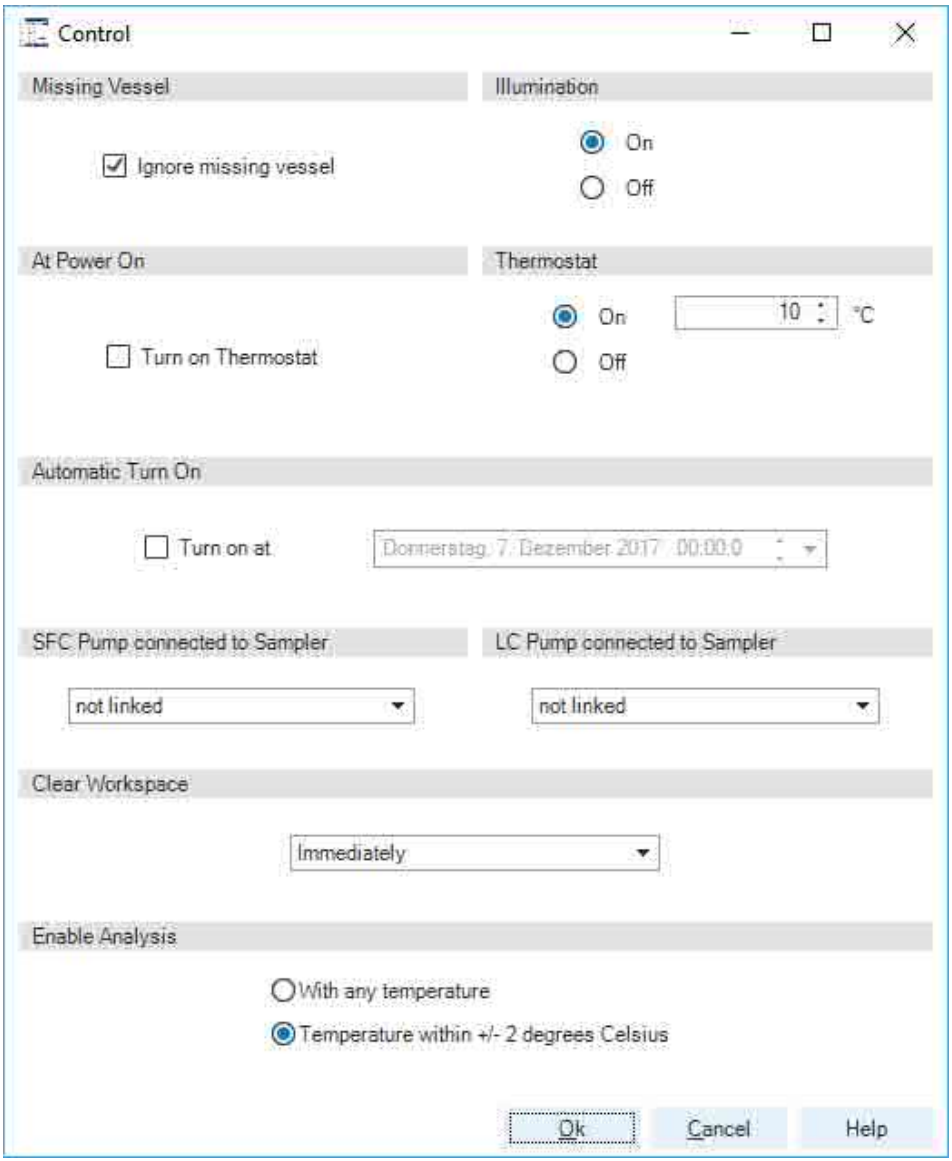


**Figure 21:** Control settings

Select **On** to switch on the cooler/thermostat. Specify the required temperature in the adjacent field. Note that the specified temperature must be at least 5 °C below ambient for proper temperature control.

Select **Off** to switch off the cooler/thermostat.

## Temperature Mode

Selecting **Modify** > **Temperature Mode** in the **Control Interface** will prompt a dialog box, where the temperature control mode can be switched between being a method parameter or a system (control) setting:

- **Constant Temperature Mode**: The temperature control mode is defined as a system (control) setting, meaning that the temperature setting is independent of the method parameters. The temperature stays constant for all methods within a given sequence. This control mode is the default option and recommended for most applications.
- **Variable Temperature Mode**: The temperature control mode is defined as a method parameter, meaning that the temperature setting is part of the method parameters. The temperature can change from method to method within a given sequence. This control mode is not recommended for most analytical workflows but might be used for some special applications, such as degradation studies.

**NOTE**

For modifying the temperature mode, LC & CE drivers A.02.12 or higher are required. If the system is run on an earlier driver version, the temperature mode is defined as a system setting.

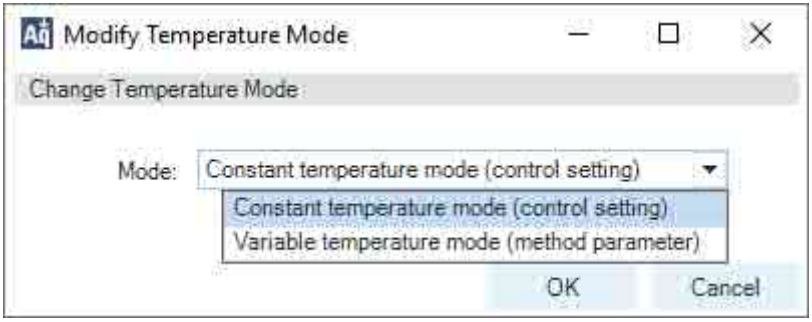


**Figure 22:** Modify Temperature Mode screen

Before using the **Variable Temperature Mode** setting, here are some hints and tips to consider:

- Changing the temperature setting from one method to another will affect all samples inside the sampler.
- Depending on the extent of the temperature change, it could take up to a couple of hours until the sample temperature stabilizes at the new setpoint (for example, from 4 to 40 °C or vice versa).

- It might be beneficial to use the **Temperature within +/- 2 °C** function; otherwise, the next run will start without waiting for the new setpoint being reached.

## Online Signals

In the **Online Signals** tab of the CDS, the actual temperature of the sample space can be configured and plotted together with the other instrument actuals. This enables the user to have a better overview of how the temperature changes over time.

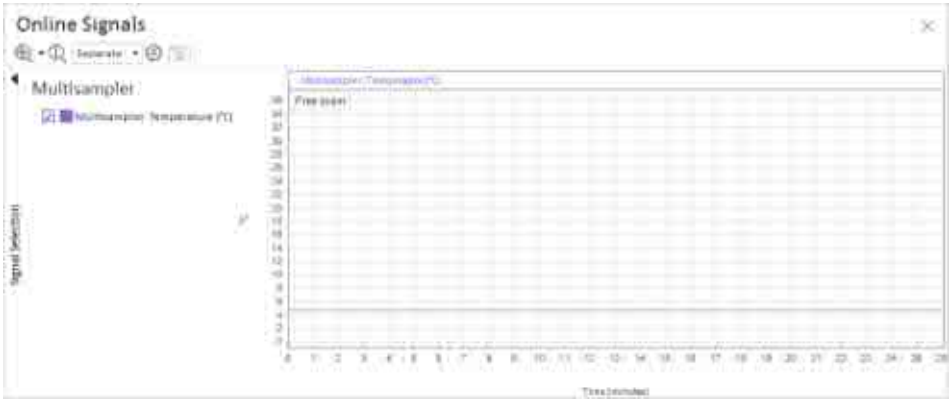


## Reporting Sample Temperature

The actual and setpoint temperature can be included in the analysis report. For this, the **Samples** > **Advanced Run Information** field must be included in the report template.

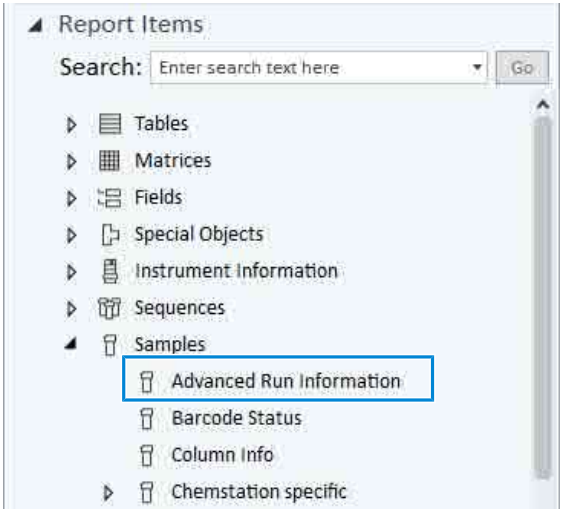


**Figure 23:** Finding the Advanced Run Information setting in OpenLab CDS 2.4.

**Method Events**

| Module | Name | Value |
|---|---|---|
| Sampler | Run start - Temperature | 5 °C |
| Sampler | Run start - Temperature setpoint | 4 °C |
| Sampler | Run stop - Temperature | 5 °C |
| Sampler | Run stop - Temperature setpoint | 4 °C |

**Figure 24:** Reporting actual and setpoint temperature using the **Advanced Run Information** setting.

**NOTE** For OpenLab CDS ChemStation, this option is only available in Intelligent Reporting.

## Operation Information

### Reaching Setpoint Temperature

Depending on the ambient conditions and the sampler configuration (for example, hotel configuration for the Multisampler), reaching the setpoint temperature can take from 30 min up to a couple of hours.

**NOTE** Reaching the 4 °C setpoint from an ambient temperature of 22 °C takes about 45 min for the Vialsampler (G7129A/B/C or G7157A), as well as for the Multisampler (G7167A/B, G5668A, G7137A, or G4767A), and the Online Sample Manager (G3167A) with a single 2H drawer installed.

**NOTE** This relatively slow ramping down of the temperature is necessary to avoid ice formation.

**NOTE** For the best performance of the Sample Cooler/Sample Thermostat, all drawers must be installed in the sampler. For the Multisampler, use dummy drawers if no full hotel configuration is needed.

### Condensate Formation

Operating the thermostat at temperatures below ambient results in condensate formation. This condensed water is collected in the base plate of the thermostat and drained through the drainpipe at the back of the unit. The container for condensate collection should be regularly emptied to ensure the proper functioning of the system.

**NOTE** If the container is overfilled or the condensate tubing is blocked, the condensate sensor is triggered, rendering the HPLC system to enter the error state (see Sample Temperature Control Switched Off Due to Condensate on page 181).

**NOTE** Depending on the ambient conditions in the lab, the amount of condensate can vary from 200 mL to 2 L per day. Waste containers for the condensate should not be filled to the top. The waste container must be emptied regularly.

### Dew Formation

Setting the thermostat from a lower to a higher temperature setpoint, or just simply turning it off, can result in dew formation on the internal surfaces of the sampler. This is normal and should cease after a couple of hours at the most.

### Frequent Door/Drawer Opening

Opening the door(s) and/or the sample drawers frequently can compromise the temperature stability, as fresh warm and humid air will enter each time. In a highly humid environment, this could also lead to the formation of significant amounts of condensate on the internal surfaces of the sampler.

### Ice Formation

The Sample Thermostat was designed to operate without the risk of icing. In an unlikely event of ice formation, turn off the thermostat and wait until it defrosts.

**NOTE** Do not use mechanical devices or other means to accelerate the defrosting process.

### Shutting Down

When the Sample Thermostat needs to be turned off for the night or a longer period, the following best practices are recommended:

- Remove all sample containers and/or vials from the sampler.
- Let the system reach the ambient temperature. Opening the door(s) of the sampler facilitates this process.
- Remove any condensate that might appear on the sample drawers or the internal surfaces of the sampler.
- Make sure that all condensate is removed from the thermostat.

**NOTE** Gently tapping on the sides of the sampler facilitates the condensate removal. Tilting the module towards its right back corner is not recommended as it can damage the internal parts.

# Transporting the Sampler

## Prepare a Sampler Without Thermostat for Transportation

**When**

- The module needs to be transported or relocated.

**WARNING**

**Heavy weight**

**The module is heavy.**

- **Carry the module at least with 2 people.**
- **Avoid back strain or injury by following all precautions for lifting heavy objects.**
- **Ensure that the load is as close to your body as possible.**
- **Ensure that you can cope with the weight of your load.**

**CAUTION**

Unsecured transportation

Mechanical damage

- Secure the sampler handler assembly before transporting the sampler.

1. Remove all sample containers from the sample hotel.
2. Move the robot arm to the park position using Instant Pilot or Lab Advisor, see Arm Position on page 139.
3. Turn off the sampler.
4. Install all parts of the Transport Protection, see Install the Transport Protection Foam on page 110.

## Prepare a Sampler With Thermostat for Transportation

**When**

- The module needs to be transported or relocated.

**WARNING**

**Heavy weight**

**The module is heavy.**

- **Carry the module at least with 2 people.**
- **Avoid back strain or injury by following all precautions for lifting heavy objects.**
- **Ensure that the load is as close to your body as possible.**
- **Ensure that you can cope with the weight of your load.**

**CAUTION**

Condensate inside the module

Damage to the electronics of the module

- After installation of the Sample Thermostat, wait at least 30 min before switching on the module.
- Make sure there is no condensate inside the module.

**CAUTION**

Unsecured transportation

Mechanical damage

- Secure the sampler handler assembly before transporting the sampler.

**NOTE**

Moving the sampler with the Sample Thermostat installed is possible for short distances (for example, from one workbench to another). For longer transportation, remove the thermostat from the sampler and handle the units separately.

1. Remove condensate.
   - **a** Place a suitable container underneath the outlet pipe.
   - **b** Remove the drainage tube.
   - **c** Gently tap the sides of the sampler several times to facilitate the drainage of the condensate from the system.

**NOTE**

Do not tilt the module to avoid damage to the internal parts.

2 Remove all sample containers from the sample hotel.

3 Move the robot arm to the park position using Instant Pilot or Lab Advisor, see Arm Position on page 139.

4 Turn off the sampler.

5 Install all parts of the Transport Protection, see Install the Transport Protection Foam on page 110.

6 Remove the Sample Thermostat from the sampler if needed, see Replace the Sample Thermostat on page 281.

## Install the Transport Protection Foam

**When**

- To secure the transport arm before transporting or shipping the sampler.

**Parts required**

| Qty. | p/n | Description |
|---|---|---|
| 1 | G4267-40033 | Transport Protection |

**Preparations**

- All sample containers are removed from the sample hotel.
- Module is switched off.

**NOTE** The graphics are exemplary. The procedure shown is the same for your module.

1 Open the front door.

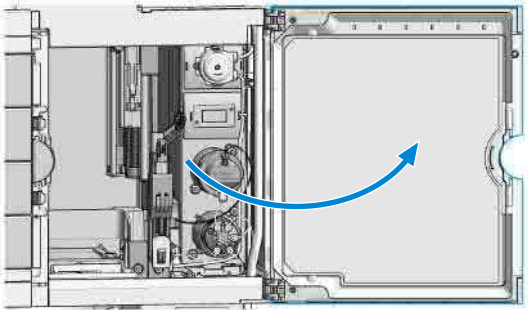

2 Manually move the robot arm to the right back corner of the lobby (park position).

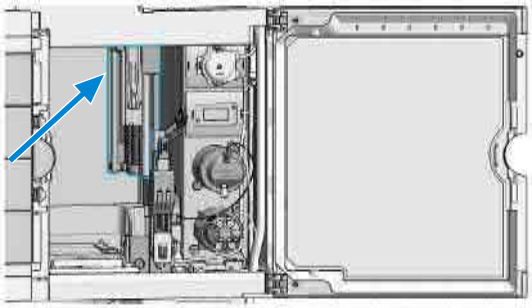

3 Carefully slide the right protection foam piece into the sampler.

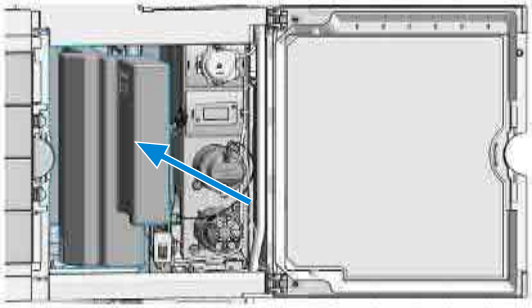

4 Position the foam next to the hydraulic box such that it sits behind the needle port.

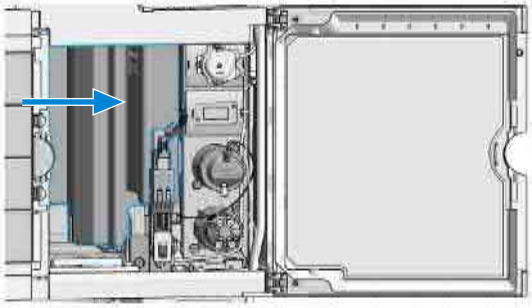

5 Slide the left protection foam piece into the sampler.

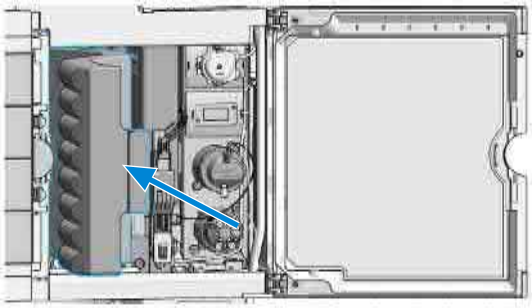

6 Firmly push it into place until it snaps in behind the hotel support frame.

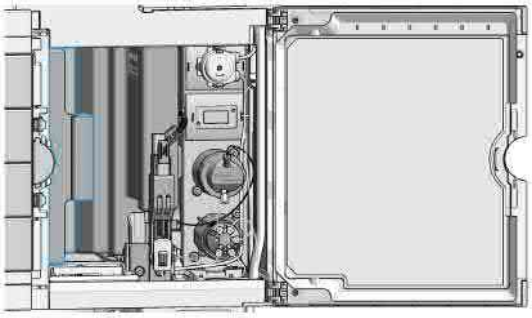

7 Place the protection foam of the hydraulic box in a way that it snaps onto the analytical head.

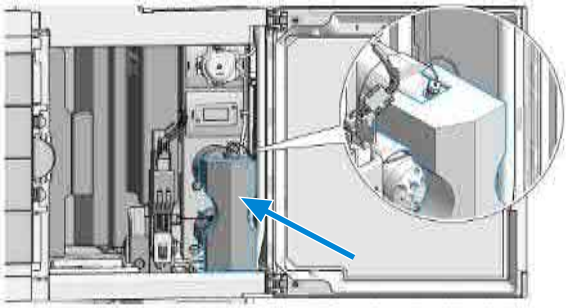

8 Verify that all three protection foams are in the correct position.

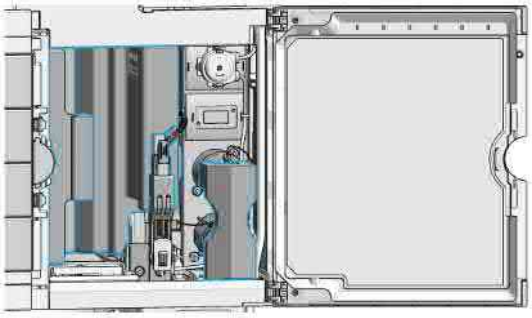

9 Close the front door.

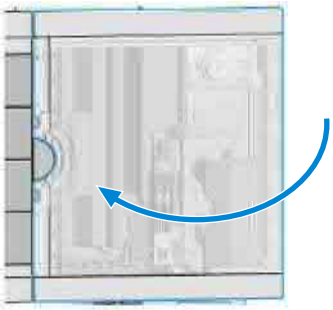

# 5 Optimizing the Performance of the Module

This chapter provides information on how to optimize the module.

**Delay Volume and Extracolumn Volume 116**
Delay Volume 116

**How to Configure the Optimum Delay Volume 117**

**How to Achieve High Throughput 121**

**How to Achieve Higher Resolution 122**

**How to Achieve Higher Sensitivity 125**

**How to Achieve Lowest Carryover (G4767A SFC Multisampler) 126**

**How to Achieve Best Reproducibility in Feed Mode (G4767A SFC Multisampler) 128**

# Delay Volume and Extracolumn Volume

The *delay volume* is defined as the system volume between the point of mixing in the pump and the front of the column.

The *extracolumn volume* is defined as the volume between the injection point and the detection point, excluding the volume in the column.

## Delay Volume

In gradient separations, this volume causes a delay between the mixture changing in the pump and that change reaching the column. The delay depends on the flow rate and the delay volume of the system. In effect, this means that in every HPLC system there is an additional isocratic segment in the gradient profile at the start of every run. Usually the gradient profile is reported in terms of the mixture settings at the pump and the delay volume is not quoted even though this will have an effect on the chromatography. This effect becomes more significant at low flow rates and small column volumes and can have a large impact on the transferability of gradient methods. It is important, therefore, for fast gradient separations to have small delay volumes, especially with narrow bore columns (e.g., 2.1 mm i.d.) as often used with mass spectrometric detection.

# How to Configure the Optimum Delay Volume

**NOTE** Configuring the optimum delay volume works in LC mode only.

For fast gradients over 0.5 min, the delay volume of the system can be easily reduced without changing the physical configuration of the system. The change is achieved by changing the behavior of the multisampler. The delay volume of the autosampler is due to the flow path from the injection valve through the metering device, needle, needle seat, and connecting capillaries back to the injection valve (see Table 15 on page 118). For a 1290/1260 Infinity III Multisampler, the delay volume equates approximately to 78 µL (G7167B) or 265 µL (G7167A). To make an injection, the valve switches from mainpass (main path) to bypass so that the metering device can draw the sample into the needle capillary. The injection is made when the valve switches back to mainpass (main path) and the sample is flushed onto the column. The valve remains in this position during analysis so that the autosampler is continually flushed and hence the gradient has to flow through this delay volume to reach the column. This can be eliminated by switching the injection valve from mainpass (main path) to bypass after the injection has been made and the injected sample has been flushed onto the column. In practice, this can be done a few seconds after injection by selecting the Automatic Delay Volume Reduction (ADVR) function in the autosampler setup menu. The Flush-out Factor (typically five times injection volume) ensures that enough time is allowed to flush the sample out of the injector before switching to bypass. For instance, a 1 µL injection under standard conditions effectively reduces the system delay volume by approximately 50 µL or 240 µL, depending on the installed Multisampler.

**Table 15:** Schematic of injection steps in the Multisampler (Single needle)

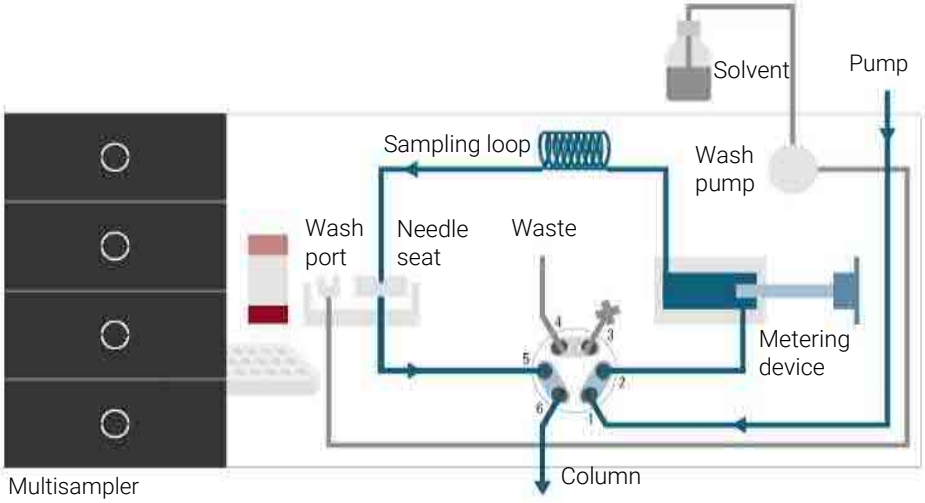


Valve in mainpass (main path), flow through

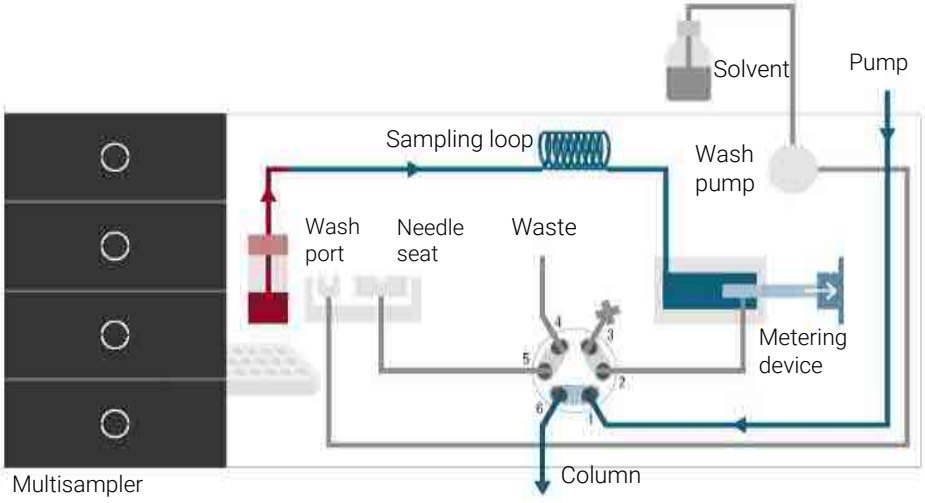


Valve in bypass, drawing sample

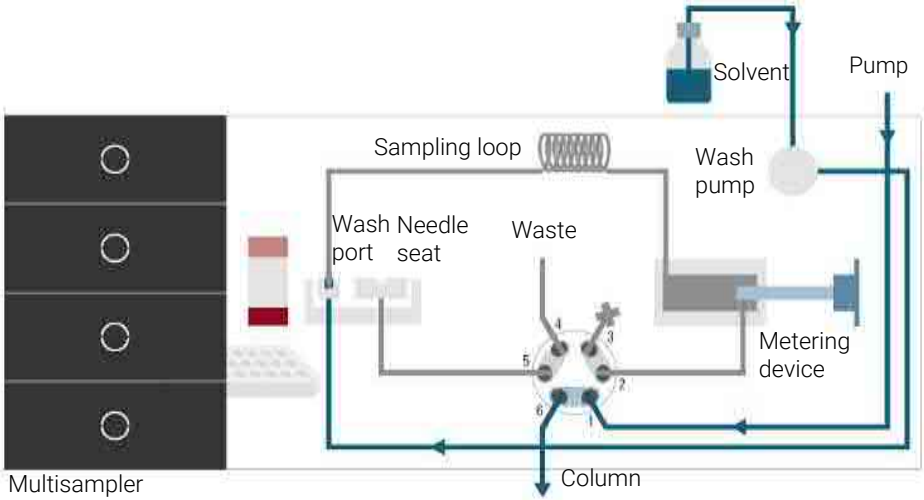


Valve in bypass, washing needle (standard wash)

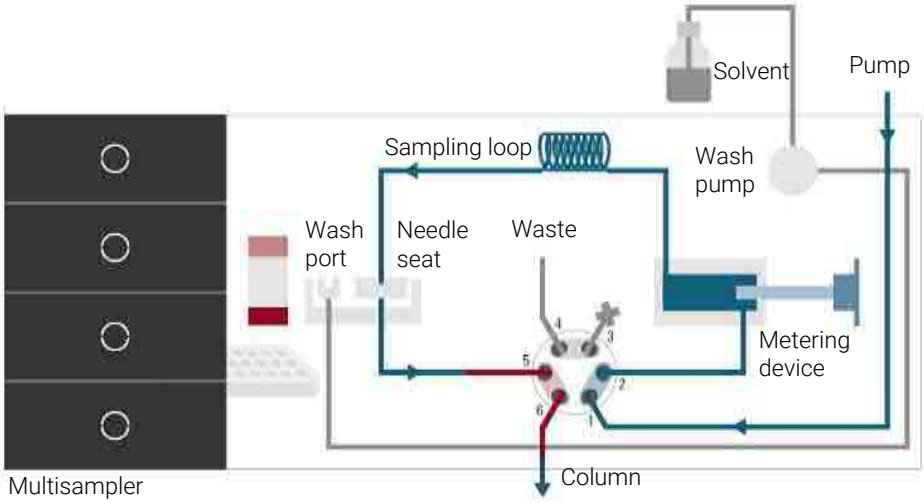


Valve in mainpass (main path), sample injected

When using ADVR, it should be noted that the gradient has already started at the pump at the instant of injection. The question should be asked whether the gradient has already reached the autosampler, in which case a small step in the gradient results. This happens when the delay volume is less than the flush-out volume and is not necessarily a problem but may be a factor to be considered in a method transfer. With a flush-out factor of 5 and an injection volume of 10 µL, the autosampler allows 50 µL to pass through before switching to bypass which, with a delay volume of 50 µL, means that the gradient just reached the injection

valve. Smaller injection volumes have no effect, but for larger injection volumes this introduces a small step in the gradient. The flow rate in use also has an impact on the decision to use ADVR or not. At a0.2 mL/min the delay time saved is 21 seconds, while at 1.0 mL/min it is 4 seconds.

The ADVR function is unlikely to be suitable for applications involving compounds that are known to cause carryover problems. The best way to reduce the delay volume is to install the 40 µL Analytical Head and the 20 µL Loop. To get the best results, it is also recommended to order the Low Dispersion Heat Exchanger and the micro flow cell for UV. This reduces the delay volume by 60 µL or 250 µL.

# How to Achieve High Throughput

The injection can be optimized for speed remembering that drawing the sample too fast can reduce the reproducibility. Marginal gains are to be made here as the sample volumes used tend towards the smaller end of the range in any case. A significant portion of the injection time is the time taken with the needle movements to and from the vial and into the flush port. These manipulations can be performed while the previous separation is running. This is known as *overlapped injection* and it can be easily turned on from the sampler setup screen in the control software. The sampler can switch the flow to bypass after the injection has been made and then after, for example, 3 minutes into a 4 minutes run, start aspirating the next sample and preparing for injection. This can typically save 0.5 to 1 minute per injection.

# How to Achieve Higher Resolution

Increased resolution in a separation will improve the qualitative and quantitative data analysis, allow more peaks to be separated or offer further scope for speeding up the separation. This section explains how resolution can be increased by examining the following points:

- Optimize selectivity
- Smaller particle-size packing
- Longer columns
- Shallower gradients, faster flow

Resolution between two peaks is described by the resolution equation:

$$Rs = \frac{1}{4}\sqrt{N}\frac{(\alpha - 1)}{\alpha}\frac{(k_2 + 1)}{k_2}$$

where

- $R_s$=resolution,
- N=plate count (measure of column efficiency),
- α=selectivity (between two peaks),
- $k_2$=retention factor of second peak (formerly called capacity factor).

The term that has the most significant effect on resolution is the selectivity, α. In practice, varying this term involves changing the type of stationary phase (C18, C8, phenyl, nitrile etc.), the mobile phase, and temperature to maximize the selectivity differences between the solutes to be separated. This is a substantial piece of work that is best done with an automated method development system, which allows assessment of a wide range of conditions on different columns and mobile phases in an ordered scouting protocol. This section considers how to get higher resolution with any chosen stationary and mobile phases. If an automated method development system was used in the decision on phases, it is likely that short columns were used for fast analysis in each step of the scouting.

The resolution equation shows that the next most significant term is the plate count or efficiency, N, which can be optimized in several ways. N is inversely proportional to the particle size and directly proportional to the length of a column. Smaller particle size and a longer column thus result in a higher plate number. The pressure rises with the inverse square of the particle size and

proportionally with the length of the column. This is the reason that the 1290 LC System was designed to go to 1300 bar so that it can run sub-2-micron particles and column length can be increased to 100 mm or 150 mm. There are even examples of 100 mm and 150 mm columns linked to give 250 mm length. Resolution increases with the square root of N so doubling the length of the column will increase resolution by a factor of 1.4 . What is achievable depends on the viscosity of the mobile phase as this relates directly to the pressure. Methanol mixtures will generate more backpressure than acetonitrile mixtures. Acetonitrile is often preferred because peak shapes are better and narrower in addition to the lower viscosity but methanol generally yields better selectivity (certainly for small molecules less than about 500 Da). The viscosity can be reduced by increasing the temperature but it should be remembered that this can change the selectivity of the separation. Experiment will show if this leads to increase or decrease in selectivity. As flow and pressure are increased, it should be remembered that frictional heating inside the column will increase and that can lead to slightly increased dispersion and possibly a small selectivity change both of which could be seen as a reduction in resolution. The latter case might be offset by reducing the temperature of the thermostat by a few degrees and again experiment will reveal the answer.

The van Deemter curve shows that the optimum flow rate through an STM column is higher than for larger particles and is fairly flat as the flow rate increases. Typical, close to optimum, flow rates for STM columns are: 2 ml/min for 4.6 mm i.d.; and 0.4 ml/min for 2.1 mm i.d. columns.

In isocratic separations, increasing the retention factor, k, results in better resolution because the solute is retained longer. In gradient separations the retention is described by $k^*$ in the following equation:

$$k^* = \frac{t_G}{\Delta\%B} \cdot \frac{F}{V_m} \cdot \frac{100}{S}$$

where:

- $k^*$ = mean k value,
- $t_G$ = time length of gradient (or segment of gradient) (min),
- F = flow (mL/min),
- $V_m$ = column delay volume,
- Δ%B = change in fraction of solvent B during the gradient,
- S = constant (ca. 4 – 5 for small molecules).

This shows that k and hence resolution can be increased by having a shallower gradient (2 to 5 %/min change is a guideline), a higher flow rate, and a smaller column volume. This equation also shows how to speed up an existing gradient – if the flow is doubled but the gradient time is halved, $k^*$ remains constant, and the separation looks the same but happens in half the time. Recently published research has shown how a shorter STM column (at temperatures above 40 °C) can generate higher peak capacity than a longer STM column by virtue of running it faster. (See *Petersson et al., J.Sep.Sci, 31, 2346-2357, 2008, Maximizing peak capacity and separation speed in liquid chromatography*)

# How to Achieve Higher Sensitivity

The sensitivity of a separation method is linked to the choice of stationary and mobile phases as good separation with narrow peaks and a stable baseline with minimal noise are desirable. The choice of instrument configuration will have an effect and a major impact is the setup of the detector. This section considers how sensitivity is affected by:

- Pump mixer volume
- Narrower columns
- Detector flow cell
- Detector parameters

In addition, the discussion on detector parameters also mentions the related topics of selectivity and linearity.

## Columns

Sensitivity is specified as a signal-to-noise ratio (S/N) and hence the need to maximize peak height and minimize baseline noise. Any reduction in peak dispersion will help to maintain peak height and so extra-column volume should be minimized by use of short, narrow internal diameter, connection capillaries and correctly installed fittings. Using smaller inner diameter columns should result in higher peak height and is therefore ideal for applications with limited sample amounts. If the same sample amount can be injected on a smaller i.d. column, then the dilution due to column diameter will be less and the sensitivity will increase. For example, decreasing the column i.d. from 4.6 mm to 2.1 mm results in a theoretical gain in peak height of 4.7 times due to the decreased dilution in the column. For a mass spectrometer detector, the lower flow rates of narrow columns can result in higher ionization efficiencies and therefore higher sensitivity.

# How to Achieve Lowest Carryover (G4767A SFC Multisampler)

Carryover is measured when residual peaks from a previous active-containing injection appear in a subsequent blank solvent injection. There will be carry over between active injections which may lead to erroneous results. The level of carryover is reported as the area of the peak in the blank solution expressed as a percentage of the area in the previous active injection. The Multisampler is optimized for lowest carryover by careful design of the flow path and use of materials in which sample adsorption is minimized. A carryover figure of 0.001 % should be achievable even when a triple quadrupole mass spectrometer is the detector. Operating settings of the Multisampler allow the user to set appropriate parameters to minimize carryover in any application involving compounds liable to stick in the system. The following functions of the Multisampler can be used to minimize carryover:

- Internal needle wash
- External needle wash
- Injection valve cleaning

The flow path, including the inside of the needle, is continuously flushed in normal operation, providing good elimination of carryover for most situations. Automated delay volume reduction (ADVR) will reduce the delay volume but will also reduce the flushing of the Standard Multisampler and should not be used with analytes where carryover might be a problem.

The outside of the needle can be washed using a wash vial in a specific location or the needle can be washed using the flush port. If a wash vial in a tray location specified by the user is chosen then this vial should have no septum and should contain a solvent suitable for washing the sample from the needle. The septum is not used to avoid wiping contamination off the needle on the downstream only to re-apply it on the upstroke. The needle can be dipped into the vial multiple times. This will be effective in removing a small degree of carryover but for more effective washing of the outside of the needle use the flushport.

The flush port is located above and behind the needle seat and in the standard hardware configuration a peristaltic pump delivers the wash solvent. It has a volume of 0.68 mL and the peristaltic pump delivers 5 mL/min, which means the flush port volume is completely refilled with fresh solvent in 7 s.

If the flush port is selected, the user can set how long the outside of the needle is to be washed with fresh solvent. This can last two or three seconds in routine situations where carryover is less of a problem and 10 – 20 s for more complete washing.

It is recommended that washing the outside of the needle in the flush port should be standard procedure to avoid contaminating the needle seat. If the needle seat becomes contaminated it will have to be back-flushed. In the SFC Multisampler this must be done by manually changing the flow connections to clean it, or automated by using the Flexible Cube module.

The flush port and its solvent delivery pump and tubing should be regularly flushed to ensure the lowest carryover. For example, before using the system each day, prime the flush pump for three minutes with appropriate solvent.

When other measures have failed to eliminate carryover it might be that analyte is sticking inside the injector valve. With auto clean feature in the CDS system the injector valve can be set to make additional switching movements to clean out the flow path in the valve if problems occur here with carryover. If the problem compounds need a high percentage of organic phase for elution, it is recommended to switch the injection valve at the high percentage of organic phase after the last peak has eluted. It is also recommended to switch the injection valve again after the initial conditions for the mobile phase have stabilized. This ensures that the bypass groove in the rotor seal of the valve contains the gradient start conditions, which is especially important for flow rates below 0.5 mL/min. For samples where the outside of the needle cannot be cleaned sufficiently with water or alcohol from the flush pump use wash vials with an appropriate solvent. With an injector program several wash vials can be used for cleaning.

The optimum carry-over performance of the Multisampler is achieved after a run-in period of new instruments or after the exchange of consumable parts (like needle, needle seat and valve parts). During injections in this period, surfaces of these parts adjust to each other. After this period, we recommend back-flushing the needle seat in order to get the sealing areas between needle and needle seat clean. Regular Preventive Maintenance service is recommended as the carry-over performance of the Autosampler depends on the integrity of these consumable parts.

# How to Achieve Best Reproducibility in Feed Mode (G4767A SFC Multisampler)

The Reproducibility can be optimized by degassing the Feed Solvent.

The Feed Solvent inlet line coming from the Feed Solvent bottle should be connected to the free Degasser Channel in the G4782A SFC Binary Pump and from the Degasser outlet to the Flush Pump inlet.

# 6 Diagnostics and Troubleshooting

This chapter gives an overview of the maintenance, troubleshooting, and diagnostic features available.

**Diagnostic Features 130**
User Interfaces 130
Troubleshooting With HPLC Advisor 130

**Maintenance and Troubleshooting Tools of the Module 131**
Introduction 131
System Pressure Test 131
Auto Referencing 134
Maintenance Positions 136
Injector Steps 139
Sample Cooler Function Test 142
Sampler Leak Test 142

**Agilent Lab Advisor Software 144**

# Diagnostic Features

This section gives an overview of the diagnostic features available.

## User Interfaces

### InfinityLab Assist

InfinityLab Assist provides you with assisted troubleshooting and maintenance at your instrument.

If the system in use supports the InfinityLab Assist, follow the instructions provided. Else, the preferred solution is to use Agilent Lab Advisor Software.

- Depending on the user interface, the available tests and the screens/reports may vary.
- The preferred tool for troubleshooting and diagnostics should be Agilent Lab Advisor Software, see Agilent Lab Advisor Software on page 144.
- The Agilent OpenLab ChemStation C.01.03 and above do not include any maintenance/test functions.
- Screenshots used within these procedures are based on the Agilent Lab Advisor Software.

## Troubleshooting With HPLC Advisor

Baseline, Peak Shape, Pressure, Retention related issues, can be solved using the HPLC Advisor App. For more information, see Troubleshooting Reversed-Phase Chromatographic Techniques With HPLC Advisor.

If using an InfinityLab Assist, navigate to **Health** > **Troubleshooting** to help solve baseline, peak shape, pressure, and retention related issues.

# Maintenance and Troubleshooting Tools of the Module

## Introduction

All tests are described based on the Agilent Lab Advisor Software B.02.06 or above. Other user interfaces may not provide any test or just a few. For details on the use of the interface refer to the interface documentation.

**Table 16:** Interfaces and available test functions

| Interface | Comment | Available Function |
|---|---|---|
| Agilent Lab Advisor | All tests are available<br><br>Adding of pressure to chromatographic signals possible | • System Pressure test<br>• Maintenance<br>• Drawer Detection/Auto Referencing<br>• Sample Cooler Function Test<br>• Sample Thermostat Function Test<br>• Sample Handler Function Test |
| OpenLab CDS 2.x | No tests available<br><br>Adding of pressure to chromatographic signals possible | • Drawer Detection/Auto Referencing<br>• Temperature mainboard<br>• Pressure/Pressure ripple |
| Agilent ChemStation | No tests available<br><br>Adding of pressure to chromatographic signals possible | • Drawer Detection/Auto Referencing<br>• Temperature mainboard<br>• Pressure/Pressure ripple |

For details on the use of the interface refer to the interface documentation.

## System Pressure Test

The test determines the leak rate of the system between pump outlet valves and a blank nut. The blank nut can be positioned at different locations in the system before the flow cell, to determine and verify the leak rate of individual modules and components. The test allows for setting the pressure at which the test is performed. The leak rate of high pressure parts is not always a linear function and therefore it is recommended to perform the test at a pressure that corresponds to the normal operating pressure of the system.

**When**

- In case of a suspected leak
- To verify successful execution of maintenance

**Parts required**

| Qty. | p/n | Description |
|---|---|---|
| 1 | 5067-6127 | Blank nut SL<br>For 1260 and 1290 Infinity II systems. |
| | | **OR** |
| 1 | 5043-0277 | PEEK blank nut for bio-compatible devices<br>For Bio-inert or 1290 Bio systems. |

1 Run the System pressure test with the Agilent Lab Advisor (for further information see Online-Help of user interface).

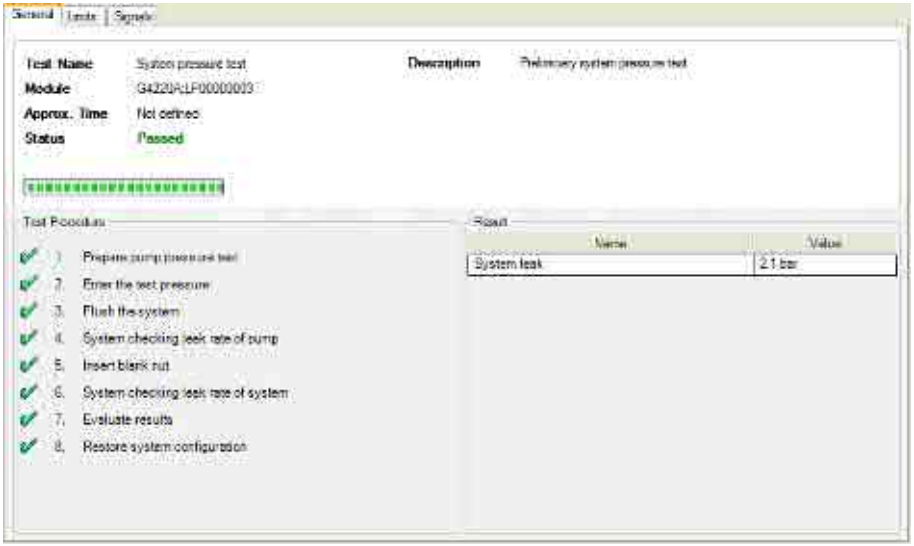


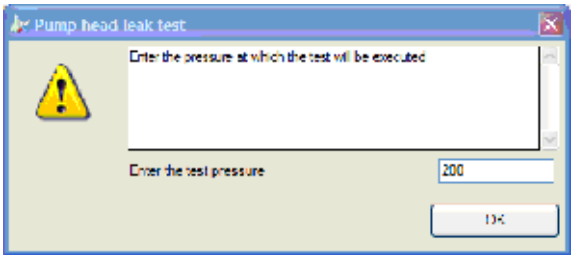


## System Pressure Test Evaluation

### Test failed

**NOTE**

Notice the difference between *error* in the test and a *failed* result! An *error* is caused by an abnormal termination during the operation of the test, whereas a *failed* result indicates that the test result were not within the specified limits.

| Probable cause | | Suggested actions |
|---|---|---|
| 1 | Damaged blank nut (poorly shaped from over tightening). | • Before investigating any other possible sources of failure make sure that the blank nut you are using is in a good condition and properly tightened. |
| 2 | Pump leakage. | • Perform the Pump Head Leak test. |
| 3 | Loose or leaky fittings. | • Tighten the fittings or replace capillaries. |
| 4 | Autosampler leakage. | • Perform the Autosampler Leak test. |
| 5 | Thermostatted Column Compartment valve leakage. | • Replace the TCC valve rotor seal. |

## Auto Referencing

The sampler auto referencing uses predefined positions on the base plate and the sample hotel to calibrate the positioning of the needle parkstation and the sample hotel. The auto referencing is required to compensate deviations in positioning the needle assembly and the sample tray. The auto referencing is required after disassembling the system or when you exchange the sample handler, the sample hotel, the needle parkstation, the needle assembly or one of the mainboards. This function is implemented in the drawer detection and in the needle exchange routine.

**When**

- After disassembling the module or an exchange of the needle assembly.

**Preparations**

- Workspace of the sampler is empty
- All drawers are closed properly
- All drawers have two sample trays installed, but no sample containers
- All drawers have been properly configured
- Needle assembly is installed in the needle parkstation

1 Open the Agilent chromatography data system of the instrument.

A right-click into the Active Area of the sampler will open a menu to modify

- drawer configuration
- capillaries
- Reference Vial Bar

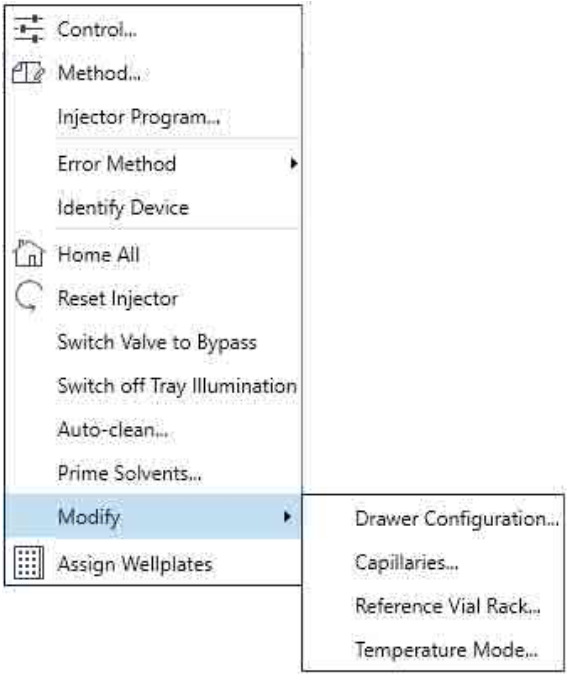


2 Use drawer configuration and follow the software instructions.

Auto referencing is done.

3 Click the **Back** button to leave the **Service & Diagnosis** menu.

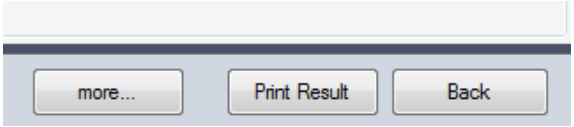


**NOTE** For auto referencing, you can alternatively use the Local Controller.

## Maintenance Positions

Some maintenance procedures require the needle assembly, the sample loop flex, the metering device and the needle seat to be moved to specific positions to enable easy access to components. The maintenance functions move these assemblies into the appropriate maintenance position. In the Agilent Lab Advisor Software the maintenance positions can be selected in the **Service & Diagnostics** view.

**When**

- Performing maintenance on the module.

1 Run the Maintenance Positions in the **Service & Diagnostics** View in the Agilent Lab Advisor (for further information see Online-Help of user interface).

### Change Needle Assembly

The Sample handler is positioning the needle assembly so that there is easy access for changing needle assembly or needle seat. The position is far to the left of the needle park station, and the motors are de-energized. So, the Z-drive of the robot can be moved during maintenance of the module.

**NOTE** For safety reason, you have to lock the needle assembly before you detach the needle from the robot. See Exchange the Needle Assembly.

**NOTE** During normal operation, the needle assembly has to be unlocked.

**Figure 25:** Change Needle Asssembly

## Change Sample Loop Capillary

The **Change Loop** command positions the Z-drive of the robotarm far to the left of the needle parkstation to enable easy exchange of the sample loop cartridge.

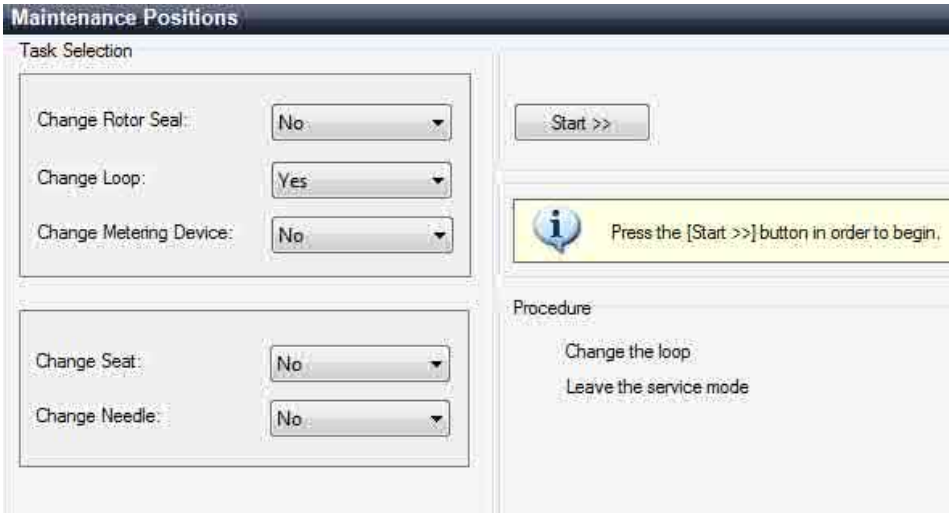


**Figure 26:** Change Sample Loop Capillary

## Arm Position

The home position of the sampler ensures a better access to the workspace. When transporting the module it is highly recommended to use the **Instrument Control** > **Park Position** command, in order to place the Sample Handler in a position for safe transport.

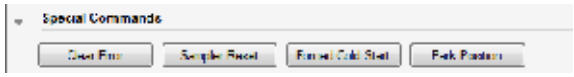


**Figure 27:** Park Position Button

**NOTE**

If the transport assembly is not parked and not protected by the transport foam, the module could be damaged due to excessive shock of the shipping container during transport.

## Change Metering Device

When removing the metering device is necessary (by exchanging the metering seal for instance), the metering drive needs to be moved to a position at the far back, in order to prevent seal and/or piston damage.

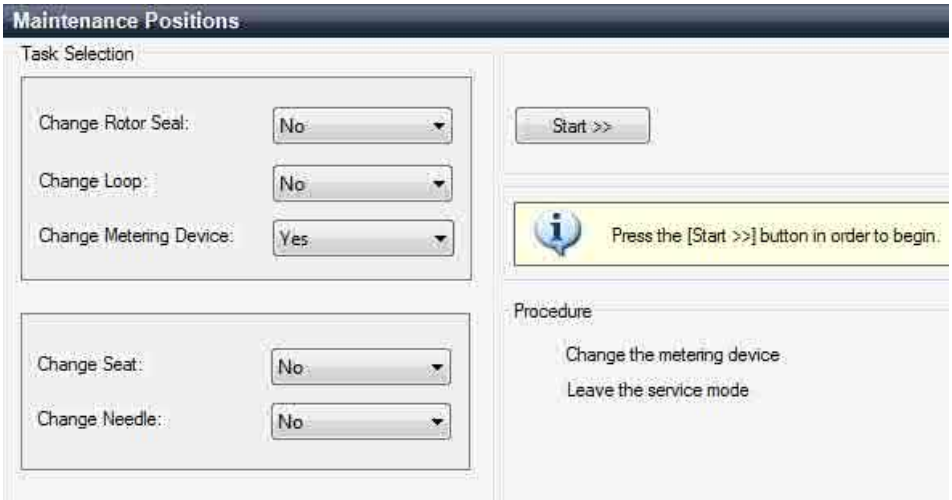


**Figure 28:** Change Metering Device

## Injector Steps

Each movement of the sampling sequence can be done under manual control. This is useful during troubleshooting, where close observation of each of the sampling steps is required to confirm a specific failure mode or verify successful completion of a repair. Each injector step command actually consists of a series of individual commands that move the multisampler components to predefined positions, enabling the specific step to be done.

1 Run the **Injector Steps** in the **Service & Diagnostics** View in the Agilent Lab Advisor (for further information see Online-Help of user interface).

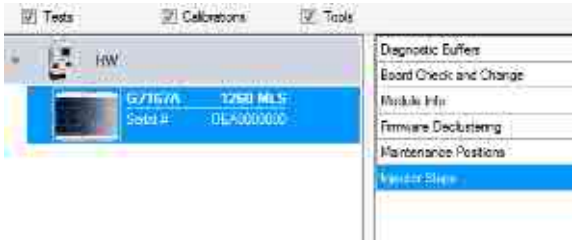


2 Select the individual step command like needle selection and needle position (for further information see Online-Help of user interface).

**NOTE** Follow a logical order to use the injector steps function.

## Sample Cooler Function Test

The **Sample Cooler Function Test** is a diagnostic test to verify the correct functioning of the Sample Thermostat. The test takes up to 15 min to complete and returns a pass/fail type result. If the test failed or was aborted by the system, the final report will include some information on the possible root causes.

Before the test starts, the compressor is turned off to allow the system to reach the initial conditions. The test starts with acquiring data from the evaporator temperature sensor. If the reading is stable for at least 10 s ($\Delta T < 0.5$ °C), the compressor turns on and the temperature inside the thermostat starts to drop.

For the test to succeed, the system must pass three temperature checkpoints in a timely manner. These checkpoints are the following:

- Checkpoint 1: The temperature drops by 1/3 of the difference between the starting temperature and 5 °C.
- Checkpoint 2: The temperature drops below 5 °C.
- Checkpoint 3: The temperature stabilizes at a value below 5 °C and stays stable for at least 60 s ($\Delta T < 1.0$ °C).

For a Sample Thermostat, the heater resistance of the heating elements will also be tested and checked if the measured value is within the acceptance range (5 – 9 Ohm).

**NOTE** Lab Advisor B.02.11 or higher is needed for testing the heater resistance of the G7167-60101 Sample Thermostat.

**NOTE** Lab Advisor 2.19 or higher is needed to execute the Sample Cooler Function Test for the G7167-60201 Sample Thermostat.

## Sampler Leak Test

The **Sampler Leak Test** determines the specific leak rates of injection valve, metering device, needle/seat, and system. The test requires that a blank nut gets installed at port 6 (outlet) of the injection valve. The test allows for setting the pressure at which it should be performed (maximum pressure allowed: 1000 bar), and it is recommended to use a pressure that corresponds to the normal operation of the system.

The test proceeds as follows:

1. A pump head leak test is carried out on the selected channel.
2. A **Pressure Test** is carried out in the bypass position.
3. A **Pressure Test** is carried out in the main pass position.
4. A **Pressure Test** is carried out in the main pass position with the needle at the blocked seat position.

The values obtained are then used to calculate the injection valve, metering device, and needle/seat leak rates.

At the end of the test, the results are evaluated automatically.

**When**

- In case of a suspected leak
- To verify successful execution of maintenance

**Parts required**

| Qty. | p/n | Description |
|---|---|---|
| 1 | 5067-6127 | Blank nut SL |
| 1 | 5043-0277 | PEEK blank nut for bio-compatible devices |
| 1 | 8710-0510 | Open-end wrench 1/4-5/16 inch |

**Preparations**

- Place a bottle of solvent in the channel that shall be tested. The type of solvent is not important.

**1** Run the **Sampler Leak Test** with the Agilent LabAdvisor and follow the provided instructions.

**NOTE**

The **Sampler Leak Test** is only available for Standard or Multiwash Multisamplers and the Online Sample Manager. For Dual-Needle Multisamplers, perform the **System Pressure Test** instead.

# Agilent Lab Advisor Software

The Agilent Lab Advisor Software (basic license, shipped with an Agilent LC pump) is a standalone product that can be used with or without a chromatographic data system. Agilent Lab Advisor helps to manage the lab for high-quality chromatographic results by providing a detailed system overview of all connected analytical instruments with instrument status, Early Maintenance Feedback counters (EMF), instrument configuration information, and diagnostic tests. With the push of a button, a detailed diagnostic report can be generated. Upon request, the user can send this report to Agilent for a significantly improved troubleshooting and repair process.

The Agilent Lab Advisor software is available in two versions:

- Lab Advisor Basic
- Lab Advisor Advanced

Lab Advisor Basic is included with every Agilent 1200 Infinity Series and Agilent InfinityLab LC Series instrument.

The Lab Advisor Advanced features can be unlocked by purchasing a license key, and include real-time monitoring of instrument actuals, all various instrument signals, and state machines. In addition, all diagnostic test results, calibration results, and acquired signal data can be uploaded to a shared network folder. The Review Client included in Lab Advisor Advanced makes it possible to load and examine the uploaded data no matter on which instrument it was generated. This makes Data Sharing an ideal tool for internal support groups and users who want to track the instrument history of their analytical systems.

The optional Agilent Maintenance Wizard Add-on provides an easy-to-use, step-by-step multimedia guide for performing preventive maintenance on Agilent 1200 Infinity LC Series instrument.

The tests and diagnostic features that are provided by the Agilent Lab Advisor software may differ from the descriptions in this manual. For details, refer to the Agilent Lab Advisor software help files.

# 7 Error Information

This chapter describes the meaning of error messages, and provides information on probable causes and suggested actions how to recover from error conditions.

**What Are Error Messages 147**

**General Error Messages 148**
Timeout 148
Shutdown 148
Remote Timeout 149
Lost CAN Partner 150
Leak 151
Leak Sensor Open 152
Leak Sensor Short 153
Compensation Sensor Open 154
Compensation Sensor Short 155
Fan Failed 156
ERI Messages 157

**Sampler Error Messages 159**
Draw Command Aborted 159
Sample Container Vessel Missing 159
Initialization Failed 160
Injection Valve Initialization Failed 161
Sampler Alignment Procedure Command Failed 162
Sampler Transport Initialization Failed 163
Front Door Error 164
Alignment Procedure: Needle Command Failed 165
Needle Hit the Vessel Bottom 166
Robot Drive Current Too High 167
Robot Drive Hardware Overcurrent 168
Cleaning Procedure Failed 169
Metering Device Initialization Failed 170

Flush Pump Device Initialization Failed 171
Peripheral Valve Initialization Failed 172
Move Needle to Parkstation Failed 173
Taking Needle from Parkstation Failed 174
Taking Sample Tray From Hotel Position Failed 175
Transport Motor Index Missing 176
Transport Motor Tag Cannot Be Read 177
Peristaltic Pump Movement Failed 178
Seat Back Flushing Failed 179

**Sample Thermostat Error Messages 181**
Sample Temperature Control Voltage Too Low, Check Fuses and Wires 181
Sample Temperature Control Switched Off Due to Condensate 181
Sample Temperature Control Switched Off Due to Overpressure 182
Sample Temperature Control Sensor Electronics Calibration Failed 183
Sample Temperature Control Switched Off Due to Supply Voltage Drop 184
Cooler Condensate Sensor Defect 185
Cooler PCB Is in Error Mode 186
Cooler Condenser Fan Failed 187
Thermostat Communication Error 188
Heater Defect 189
Heater in Operating Error 190
Heater Has Power Supply Failure 191
Thermostat Sensor Defect 192
Compressor Has Error 193
Sample Thermostat Type Unknown, Update Firmware 194
Thermostat Fan Defect 195

# What Are Error Messages

Error messages are displayed in the user interface when an electronic, mechanical, or hydraulic (flow path) failure occurs that requires attention before the analysis can be continued (for example, repair, or exchange of consumables is necessary). In the event of such a failure, the red status indicator at the front of the module is switched on, and an entry is written into the module logbook.

If an error occurs outside a method run, other modules will not be informed about this error. If it occurs within a method run, all connected modules will get a notification, all LEDs get red and the run will be stopped. Depending on the module type, this stop is implemented differently. For example, for a pump, the flow will be stopped for safety reasons. For a detector, the lamp will stay on in order to avoid equilibration time. Depending on the error type, the next run can only be started if the error has been resolved, for example liquid from a leak has been dried. Errors for presumably single time events can be recovered by switching on the system in the user interface.

Special handling is done in case of a leak. As a leak is a potential safety issue and may have occurred at a different module from where it has been observed, a leak always causes a shutdown of all modules, even outside a method run.

In all cases, error propagation is done via the CAN bus or via an APG/ERI remote cable (see documentation for the APG/ERI interface).

If using the InfinityLab Assist, instrument errors will generate a notification. To view the probable causes and recommended actions for this error, click on **Help** button displayed on the notification.

# General Error Messages

General error messages are generic to all Agilent series HPLC modules and may show up on other modules as well.

## Timeout

### Error ID: 62

The timeout threshold was exceeded.

| Probable cause | | Suggested actions |
|---|---|---|
| 1 | The analysis was completed successfully, and the timeout function switched off the module as requested. | • Check the logbook for the occurrence and source of a not-ready condition. Restart the analysis where required. |
| 2 | A not-ready condition was present during a sequence or multiple-injection run for a period longer than the timeout threshold. | • Check the logbook for the occurrence and source of a not-ready condition. Restart the analysis where required. |

# Shutdown

## Error ID: 63

An external instrument has generated a shutdown signal on the remote line.

The module continually monitors the remote input connectors for status signals. A LOW signal input on pin 4 of the remote connector generates the error message.

| Probable cause | | Suggested actions |
|---|---|---|
| 1 | Leak detected in another module with a CAN connection to the system. | • Fix the leak in the external instrument before restarting the module. |
| 2 | Leak detected in an external instrument with a remote connection to the system. | • Fix the leak in the external instrument before restarting the module. |
| 3 | Shut-down in an external instrument with a remote connection to the system. | • Check external instruments for a shut-down condition. |
| 4 | The degasser failed to generate sufficient vacuum for solvent degassing. | • Check the vacuum degasser for an error condition. Refer to the Service Manual for the degasser or the pump that has the degasser built-in.<br>• Check the external vacuum degasser module (if installed) for an error condition. Refer to the *Service Manual* for the degasser or the pump that has the degasser built-in. |

# Remote Timeout

## Error ID: 70

A not-ready condition is still present on the remote input. When an analysis is started, the system expects all not-ready conditions (for example, a not-ready condition during detector balance) to switch to run conditions within one minute of starting the analysis. If a not-ready condition is still present on the remote line after one minute the error message is generated.

| Probable cause | | Suggested actions |
|---|---|---|
| 1 | Not-ready condition in one of the instruments connected to the remote line. | • Ensure the instrument showing the not-ready condition is installed correctly, and is set up correctly for analysis. |
| 2 | Defective remote cable. | • Exchange the remote cable. |
| 3 | Defective components in the instrument showing the not-ready condition. | • Check the instrument for defects (refer to the instrument's documentation). |

# Lost CAN Partner

## Error ID: 71

During an analysis, the internal synchronization or communication between one or more of the modules in the system has failed.

The system processors continually monitor the system configuration. If one or more of the modules is no longer recognized as being connected to the system, the error message is generated.

| Probable cause | | Suggested actions |
|---|---|---|
| 1 | CAN cable disconnected. | • Ensure all the CAN cables are connected correctly.<br>• Ensure all CAN cables are installed correctly. |
| 2 | Defective CAN cable. | • Exchange the CAN cable. |
| 3 | Defective mainboard in another module. | • Switch off the system. Restart the system, and determine which module or modules are not recognized by the system. |

# Leak

## Error ID: 64

A leak was detected in the module.

The signals from the two temperature sensors (leak sensor and board-mounted temperature-compensation sensor) are used by the leak algorithm to determine whether a leak is present. When a leak occurs, the leak sensor is cooled by the solvent. This changes the resistance of the leak sensor which is sensed by the leak sensor circuit on the mainboard.

| Probable cause | | Suggested actions |
|---|---|---|
| 1 | Loose fittings. | • Ensure all fittings are tight. |
| 2 | Broken capillary. | • Exchange defective capillaries. |
| 3 | Leaking rotor seal or needle seat. | • Exchange the rotor seal or seat capillary. |
| 4 | Defective metering seal. | • Exchange the metering seal.<br>• *Make sure the leak sensor is thoroughly dry before restarting the autosampler.* |
| 5 | Leaking peristaltic pump. | • Exchange the peristaltic pump. |

# Leak Sensor Open

## Error ID: 83

The leak sensor in the module has failed (open circuit).

The current through the leak sensor is dependent on temperature. A leak is detected when solvent cools the leak sensor, causing the leak sensor current to change within defined limits. If the current falls outside the lower limit, the error message is generated.

| Probable cause | | Suggested actions |
|---|---|---|
| 1 | Leak sensor not connected to the on/off switch board. | • Please contact your Agilent service representative. |
| 2 | Defective leak sensor. | • Please contact your Agilent service representative. |
| 3 | Leak sensor incorrectly routed, being pinched by a metal component. | • Please contact your Agilent service representative. |
| 4 | On/Off switch assembly defective. | • Please contact your Agilent service representative. |

# Leak Sensor Short

## Error ID: 82

The leak sensor in the module has failed (short circuit).

The current through the leak sensor is dependent on temperature. A leak is detected when solvent cools the leak sensor, causing the leak sensor current to change within defined limits. If the current increases above the upper limit, the error message is generated.

| Probable cause | | Suggested actions |
|---|---|---|
| 1 | Defective leak sensor. | • Please contact your Agilent service representative. |
| 2 | Leak sensor incorrectly routed, being pinched by a metal component. | • Please contact your Agilent service representative. |
| 3 | On/Off switch assembly defective. | • Please contact your Agilent service representative. |
| 4 | Cable or contact problem. | • Please contact your Agilent service representative. |

# Compensation Sensor Open

## Error ID: 81

The ambient-compensation sensor (NTC) on the power switch board in the module has failed (open circuit).

The resistance across the temperature compensation sensor (NTC) on the power switch board is dependent on ambient temperature. The change in resistance is used by the leak circuit to compensate for ambient temperature changes. If the resistance across the sensor increases above the upper limit, the error message is generated.

| Probable cause | | Suggested actions |
|---|---|---|
| 1 | Loose connection between the on/off switch board and the mainboard. | • Please contact your Agilent service representative. |
| 2 | Defective on/off switch assembly. | • Please contact your Agilent service representative. |

# Compensation Sensor Short

## Error ID: 80

The ambient-compensation sensor (NTC) on the power switch board in the module has failed (open circuit).

The resistance across the temperature compensation sensor (NTC) on the power switch board is dependent on ambient temperature. The change in resistance is used by the leak circuit to compensate for ambient temperature changes. If the resistance across the sensor increases above the upper limit, the error message is generated.

| Probable cause | | Suggested actions |
|---|---|---|
| 1 | Defective on/off switch assembly. | • Please contact your Agilent service representative. |
| 2 | Loose connection between the on/off switch board and the mainboard. | • Please contact your Agilent service representative. |

# Fan Failed

## Error ID: 68

The fan in the autosampler module or in the Sample Cooler/Sample Thermostat has failed.

- Error ID: 68,0 → Sampler fan defect
- Error ID: 68,1 → Condenser fan defect
- Error ID: 68,2 → Evaporator fan defect

The hall sensor on the fan shaft is used by the mainboard to monitor the fan speed. If the fan speed falls below a certain limit for a certain length of time, the error message is generated.

This limit is given by 2 revolutions/second for longer than 5 seconds.

Depending on the module, assemblies (e.g. the lamp in the detector) are turned off to assure that the module does not overheat inside.

| Probable cause | | Suggested actions |
|---|---|---|
| 1 | Fan cable disconnected. | • Please contact your Agilent service representative. |
| 2 | Defective sampler fan. | • Please contact your Agilent service representative. |
| 3 | Defective evaporator fan. | • Please contact your Agilent service representative. |
| 4 | Defective condenser fan. | • Please contact your Agilent service representative. |
| 5 | Blown fuses. | • Please contact your Agilent service representative. |
| 6 | Defective mainboard. | • Please contact your Agilent service representative. |
| 7 | Improperly positioned cables or wires obstructing fan blades. | • Please contact your Agilent service representative. |

# ERI Messages

## Error ID: 11120, 11121

The ERI (Enhanced Remote Interface) provides two error events related to over current situations on the +5 V and +24 V lines.

| Probable cause | | Suggested actions |
|---|---|---|
| 1 | The load on the ERI is too high. | • Reduce the load. |

# Sampler Error Messages

## Draw Command Aborted

### Error ID: 25478

The robot (sample handler) failed to move correctly during injection sequence.

| Probable cause | | Suggested actions |
|---|---|---|
| 1 | Missing vessel. | • Check if the sample vial is installed in the correct position, or edit the method or sequence accordingly. |
| 2 | Needle command failed. | • Check the status of the needle assembly. Perform an autoreferencing. |

# Sample Container Vessel Missing

## Error ID: 25471

No vial was found in the position defined in the method or sequence. When the needle carrier moves to a vial and the needle lowers into the vial, the position of the needle is monitored by an encoder behind the vial pusher. If no vial is present, the encoder detects an error and the message “missing vial” is generated.

| Probable cause | | Suggested actions |
|---|---|---|
| 1 | No vial in the position defined in the method. | • Install the sample vial in the correct position.<br>• Edit the method or sequence accordingly. |
| 2 | Defective needle assembly. | • Exchange the needle assembly. |
| 3 | Sample container missing or not correctly installed. | • Install the sample container correctly on the tray. |

# Initialization Failed

## Error ID: 25120

The autosampler failed to complete initialization correctly. The autosampler initialization procedure moves the robot to its reference positions in a predefined routine. During initialization, the processor monitors the position sensors and motor encoders to check for correct movement. During initialization the system also checks the status of the sample hotel and the hydraulic box. If one or more of the movements or the status information of the subparts is not read out successfully, the error message is generated.

| Probable cause | | Suggested actions |
|---|---|---|
| 1 | Front door not installed correctly. | • Check if the front door is installed correctly.<br>• Check if the magnet is in place in the front door. |
| 2 | Sample handler not aligned correctly. | • Do an autoreferencing.<br>• Check if the sample handler can move freely.<br>• Do an autoreferencing afterwards (needle assembly must be installed in the needle parkstation during this procedure).<br>• If this will not help: Please contact your Agilent service representative. |
| 3 | Mechanical obstruction of the sample handler. | • Ensure unobstructed movement. |
| 4 | Defective sample handler motors. | • Please contact your Agilent service representative. |
| 5 | Loose connection between hydraulic box and adapter board. | • Please contact your Agilent service representative. |
| 6 | Defective sample hotel electronic. | • Please contact your Agilent service representative. |
| 7 | Defective specific mainboard or communication board. | • Please contact your Agilent service representative. |

# Injection Valve Initialization Failed

## Error ID: 25123

The autosampler failed to complete initialization correctly. The autosampler initialization procedure can recognize and move the injection valve to its reference positions in a predefined routine. During initialization, the processor monitors the position sensor, tag sensors, and actuator motor to check for correct movement. If one or more of the movements or the status information of the subparts is not read out successfully, the error message is generated.

| Probable cause | | Suggested actions |
|---|---|---|
| 1 | Injection valve not installed correctly. | • Check if the injection valve is installed correctly. |
| 2 | TAG and TAG reader not aligned correctly. | • Check if the TAG or the TAG Reader are aligned correctly. |
| 3 | Electrical connection or components are defective. | • Please contact your Agilent service representative. |

# Sampler Alignment Procedure Command Failed

## Error ID: 25034

The autosampler failed to complete the alignment correctly.

| Probable cause | | Suggested actions |
|---|---|---|
| 1 | Mechanical obstruction of the sample handler. | • Ensure unobstructed movement. |
| 2 | Defective sample handler motors. | • Please contact your Agilent service representative. |

# Sampler Transport Initialization Failed

## Error ID: 25121

The autosampler failed to complete initialization correctly. The autosampler initialization procedure moves the robot to its reference positions in a predefined routine. During initialization, the processor monitors the position sensors and motor encoders to check for correct movement. During initialization, the processor monitors the position sensor, tag sensors, and actuator motor to check for correct movement. If one or more of the movements or the status information of the subparts is not read out successfully, the error message is generated.

| Probable cause | | Suggested actions |
|---|---|---|
| 1 | Sample handler not aligned correctly. | • Do an autoreferencing.<br>• Check if the sample handler can move freely.<br>• Do an autoreferencing afterwards (needle assembly must be installed in the needle parkstation during this procedure).<br>• If this will not help: Please contact your Agilent service representative. |
| 2 | Mechanical obstruction of the sample handler. | • Ensure unobstructed movement. |
| 3 | Defective sample handler motors. | • Please contact your Agilent service representative. |

# Front Door Error

## Error ID: 25049, 25051

During initialization, the autosampler recognizes the position of the front door. If the front door is open, this error message is displayed.

| Probable cause | | Suggested actions |
|---|---|---|
| 1 | Front door is not closed properly. | • Check if the front door is closed or if the magnet is missing. |

# Alignment Procedure: Needle Command Failed

## Error ID: 25095

During the parking or movements of the needle assembly, the status information of the subparts is not read out successfully and the error message is generated.

| Probable cause | | Suggested actions |
|---|---|---|
| 1 | The sample loop capillary was squeezed in the needle parkstation. | • Check if the sample loop is installed correctly.<br>• Do an autoreferencing afterwards (needle assembly must be installed in the needle parkstation during this procedure). |
| 2 | The needle assembly was not installed correctly in the needle parkstation. | • Check if the needle assembly is installed correctly.<br>• Install the needle assembly on the sample handler.<br>• Do a reset of the sample handler.<br>• Do an autoreferencing afterwards (needle assembly must be installed in the needle parkstation during this procedure).<br>• If this will not help: Please contact your Agilent service representative. |
| 3 | Needle parkstation is loose. | • Carefully tighten the needle parkstation. |

# Needle Hit the Vessel Bottom

## Error ID: 25226

The autosampler failed to complete injection sequence correctly. The autosampler can move and draw sample from the draw position and generates the error message.

| Probable cause | | Suggested actions |
|---|---|---|
| 1 | Sample container is not installed correctly in the pallet. | • Check if the sample container is installed correctly. |
| 2 | Sample container definition in the CDS is not correct. | • Check if the correct sample container is selected in the CDS.<br>• Verify if the dimension of the sample container match the database of your CDS. |
| 3 | Sample handler not aligned correctly. | • Do an autoreferencing.<br>• Check if the sample handler can move freely.<br>• Do an autoreferencing afterwards (needle assembly must be installed in the needle parkstation during this procedure).<br>• If this will not help: Please contact your Agilent service representative. |

# Robot Drive Current Too High

## Error ID: 25409

The autosampler failed to complete initialization correctly. The autosampler initialization procedure can not move the motors inside of the sample handler to their reference positions in a predefined routine. During initialization, the processor monitors the position sensor and encoders to check for correct movement. If one or more of the movements or the status information of the subparts is not read out successfully, the error message is generated.

| Probable cause | | Suggested actions |
|---|---|---|
| 1 | Sample handler is blocked. | • Check if the sample handler can move freely.<br>• Switch off the instrument.<br>• Do an autoreferencing afterwards (needle assembly must be installed in the needle parkstation during this procedure). |
| 2 | Defective sample handler motors. | • Please contact your Agilent service representative. |

# Robot Drive Hardware Overcurrent

## Error ID: 25411

The autosampler failed to complete initialization correctly. The autosampler electronic has detected a increasing of the internal limits and has generated the error message.

| Probable cause | | Suggested actions |
|---|---|---|
| 1 | Bad electronic connections. | • Please contact your Agilent service representative. |
| 2 | Defective mainboard/ communication board. | • Please contact your Agilent service representative. |

# Cleaning Procedure Failed

## Error ID: 25400

Cleaning procedure failed. Parameter shows what kind of cleaning procedure has failed: 1 = Wash, 2 = Prime, 3 = Autoclean, 4 = Clooged seat.

| Probable cause | | Suggested actions |
|---|---|---|
| 1 | Solvent lines not installed correctly (valve block or flushpump). | • Check status of the solvent lines. Use isopropanol for verification. |
| 2 | Clogged needle seat. | • Replace the needle seat. |

# Metering Device Initialization Failed

## Error ID: 25122

| Probable cause | | Suggested actions |
|---|---|---|
| 1 | Hydraulic box not in place. | • Please contact your Agilent service representative. |
| 2 | Metering device not properly installed. | • Check the correct positioning of RFID tag and tag reader. |

# Flush Pump Device Initialization Failed

## Error ID: 25124

| Probable cause | | Suggested actions |
|---|---|---|
| 1 | Hydraulic box not in place. | • Please contact your Agilent service representative. |
| 2 | Flush pump not properly installed. | • Check the correct positioning of RFID tag and tag reader. |

# Peripheral Valve Initialization Failed

## Error ID: 25125

| Probable cause | | Suggested actions |
|---|---|---|
| 1 | Hydraulic box not in place. | • Please contact your Agilent service representative. |
| 2 | Valve not properly installed. | • Check the correct positioning of RFID tag and tag reader. |

# Move Needle to Parkstation Failed

## Error ID: 25106

| Probable cause | | Suggested actions |
|---|---|---|
| 1 | Autoreferencing values missing or outdated. | • Manually install the needle into the parkstation, clear current autoreferencing values (use **Clear data** on Lab Advisor), power cycle the module and perform autoreferencing. |

# Taking Needle from Parkstation Failed

## Error ID: 25105

| Probable cause | | Suggested actions |
|---|---|---|
| 1 | Parkstation is loose. | • Carefully tighten the parkstation. Avoid overtightening, as this could damage the baseplate of the module. |
| 2 | Needle assembly is defective. | • Replace the needle assembly. |
| 3 | Autoreferencing needed. | • Manually install the needle into the parkstation, clear current autoreferencing values (use **Clear data** on Lab Advisor), power cycle the module and perform autoreferencing. |

# Taking Sample Tray From Hotel Position Failed

## Error ID: 25104

| Probable cause | | Suggested actions |
|---|---|---|
| 1 | Mechanical obstruction of the sample handler by reference vial holder. | • Please contact your Agilent service representative. |

# Transport Motor Index Missing

## Error ID: 25235

The index of a transport motor cannot be found. The motor ID is given in the event parameter: 0=A, 1=B, 2=Z1, 3=Z2.

| Probable cause | | Suggested actions |
|---|---|---|
| 1 | Defective fuse. | • Please contact your Agilent service representative. |
| 2 | Defective mainboard. | • Please contact your Agilent service representative. |

# Transport Motor Tag Cannot Be Read

## Error ID: 25236

The tag data of a transport motor cannot be read. The motor ID is given in the event parameter: 0=A, 1=B, 2=Z1, 3=Z2.

| Probable cause | | Suggested actions |
|---|---|---|
| 1 | One of the sample handler cables is not properly connected. | • Please contact your Agilent service representative. |
| 2 | One of the sample handler cables is damaged (corroded or chipped off). | • Please contact your Agilent service representative. |
| 3 | Defective mainboard. | • Please contact your Agilent service representative. |

# Peristaltic Pump Movement Failed

## Error ID: 25463

| Probable cause | | Suggested actions |
|---|---|---|
| 1 | Pump tubing blocked. | • Verify that the solvent tubing is not blocked. |
| 2 | Pump motor is defective. | • Replace the pump motor<br>• Replace the pump motor. |
| 3 | Pump is defective. | • Replace the peristaltic pump. |

# Seat Back Flushing Failed

## Error ID: 25119

| Probable cause | | Suggested actions |
|---|---|---|
| 1 | Clogged needle seat. | • Replace the needle seat. |

# Sample Thermostat Error Messages

## Sample Temperature Control Voltage Too Low, Check Fuses and Wires

### Error ID: 30713

The compressor voltage is below the lower threshold value.

| Probable cause | | Suggested actions |
|---|---|---|
| 1 | Potential hardware error. | • Please contact your Agilent service representative. |

# Sample Temperature Control Switched Off Due to Condensate

## Error ID: 30715

The cooler/thermostat was switched off due to a condensate event.

| Probable cause | | Suggested actions |
|---|---|---|
| 1 | Overfilled container. | • Empty the condensate container. Verify that the open end of the tubing doesn't immerse in the liquid. |
| 2 | Drainage issues. | • Verify the correct plumbing of the condensate drainage system.<br>• Make sure that no kinks or mechanical blocks are present in the drainage system.<br>• Avoid the formation of the siphoning effect.<br>• Make sure that the hosting sampler is level. |

# Sample Temperature Control Switched Off Due to Overpressure

## Error ID: 30716

The pressure in the refrigerant circuit exceeded the maximum allowed level. To prevent any damage to the system, the compressor was turned off.

| Probable cause | | Suggested actions |
|---|---|---|
| 1 | Overheated condenser. | • Turn off the cooler/thermostat and wait for 15 min to allow the system to cool down. Verify if there is enough space around the sampler for adequate ventilation and the cooler/thermostat is not exposed to direct sunlight. |
| 2 | Potential hardware error. | • Please contact your Agilent service representative. |

# Sample Temperature Control Sensor Electronics Calibration Failed

## Error ID: 30717

The system is in an error state because the calibration of the analog temperature sensor has failed.

| Probable cause | | Suggested actions |
|---|---|---|
| 1 | Sampler incompatibility. | • If the hosting sampler is a Vialsampler, verify its compatibility with the Sample Cooler installed. Units with the serial number DEBAT02000 or below are equipped with an analog temperature sensor that is not compatible with the Vialsampler. |
| 2 | Potential hardware error. | • Please contact your Agilent service representative. |

# Sample Temperature Control Switched Off Due to Supply Voltage Drop

## Error ID: 30718

The compressor is turned off due to an unexpected drop in the supply voltage.

| Probable cause | | Suggested actions |
|---|---|---|
| 1 | Potential hardware error. | • Please contact your Agilent service representative. |

# Cooler Condensate Sensor Defect

## Error ID: 30719

The condensate sensor of the cooler/thermostat is not working properly.

| Probable cause | | Suggested actions |
|---|---|---|
| 1 | Potential hardware error. | • Please contact your Agilent service representative. |

# Cooler PCB Is in Error Mode

## Error ID: 30725

The system is in an error state because the compressor control board has encountered an unexpected error.

| Probable cause | | Suggested actions |
|---|---|---|
| 1 | Potential hardware error. | • Please contact your Agilent service representative. |

# Cooler Condenser Fan Failed

## Error ID: 30726

The condenser fan of the cooler is not working properly.

| Probable cause | | Suggested actions |
|---|---|---|
| 1 | Potential hardware error. | • Please contact your Agilent service representative. |

# Thermostat Communication Error

## Error ID: 30738

The system is in an error state because the communication between the sampler and the thermostat has failed.

| Probable cause | | Suggested actions |
|---|---|---|
| 1 | Potential hardware error. | • Please contact your Agilent service representative. |

# Heater Defect

## Error ID: 30739

One of the heating elements is malfunctioning or broken.

| Probable cause | | Suggested actions |
|---|---|---|
| 1 | Potential hardware error. | • Please contact your Agilent service representative. |

# Heater in Operating Error

## Error ID: 30744

The system is in an error state because the thermostat heater has encountered an unexpected error.

| Probable cause | | Suggested actions |
|---|---|---|
| 1 | Potential hardware error. | • Please contact your Agilent service representative. |

# Heater Has Power Supply Failure

## Error ID: 30745

The voltage measured at the electric amplifier is below the expected level.

| Probable cause | | Suggested actions |
|---|---|---|
| 1 | Potential hardware error. | • Please contact your Agilent service representative. |

# Thermostat Sensor Defect

## Error ID: 30751

One of the digital temperature sensors of the cooler/thermostat is not working properly.

- Error ID: 30751,0 → Thermostat sensor defect
- Error ID: 30751,1 → Thermostat sensor defect - evaporator temperature sensor defect
- Error ID: 30751,2 → Thermostat sensor defect - condenser temperature sensor defect
- Error ID: 30751,3 → Thermostat sensor defect - external temperature sensor defect
- Error ID: 30751,4 → Thermostat sensor defect - evaporator superheat sensor defect

| Probable cause | | Suggested actions |
|---|---|---|
| 1 | Potential hardware error. | • Please contact your Agilent service representative. |

# Compressor Has Error

## Error ID: 30756

The system is in an error state because the control board of the compressor has encountered an unexpected error.

| Probable cause | | Suggested actions |
|---|---|---|
| 1 | Potential hardware error. | • Please contact your Agilent service representative. |

# Sample Thermostat Type Unknown, Update Firmware

## Error ID: 30768

The system is in an error state because the type of the thermostat is unsupported by the current firmware revision.

| Probable cause | | Suggested actions |
|---|---|---|
| 1 | Potential hardware error. | • Please contact your Agilent service representative. |

# Thermostat Fan Defect

## Error ID: 30771

One of the cooling fans of the cooler/thermostat is not working properly.

This error event indicates that either the condenser fan or the evaporator fan is not working properly.

- Error ID: 30771,0 → Thermostat fan defect
- Error ID: 30771,1 → Thermostat fan defect – evaporator fan defect
- Error ID: 30771,2 → Thermostat fan defect – condenser fan defect

| Probable cause | | Suggested actions |
|---|---|---|
| 1 | Potential hardware error. | • Please contact your Agilent service representative. |

# 8 Maintenance

This chapter provides general information on maintenance of the module.

**Introduction to Maintenance 199**

**Safety Information Related to Maintenance 201**

**Overview of Maintenance 203**

**Cleaning the Module 204**

**Removal and Installation of the Front Door 205**

**Remove the Needle Assembly 209**

**Install the Needle Assembly 214**

**Exchange the Needle Seat 219**

**Replace the Rotor Seal 223**

**Replace the Injection Valve/Replace the Idex Valve 230**

**Remove the Metering Seal 235**

**Install the Metering Seal 241**

**Replace the Peristaltic Pump Cartridge 249**

**Replace the Flush Head Seal 252**

**Remove the Sample Loop-Flex 259**

**Installing the Sample Loop-Flex 265**

**Replace the Dummy Drawer 271**
Optional Configurations 271
Installing and Replacing of Drawers (Upgrade Drawer Kit) 271
Configuration of the Hotel Drawers 276

**Replace the Module Firmware 280**

Replace the Sample Thermostat 281

# Introduction to Maintenance

Figure 29 on page 199 shows the main user accessible assemblies of the SFC Multisampler. These parts can be accessed from the front (simple repairs) and don't require to remove the sampler from the system stack.

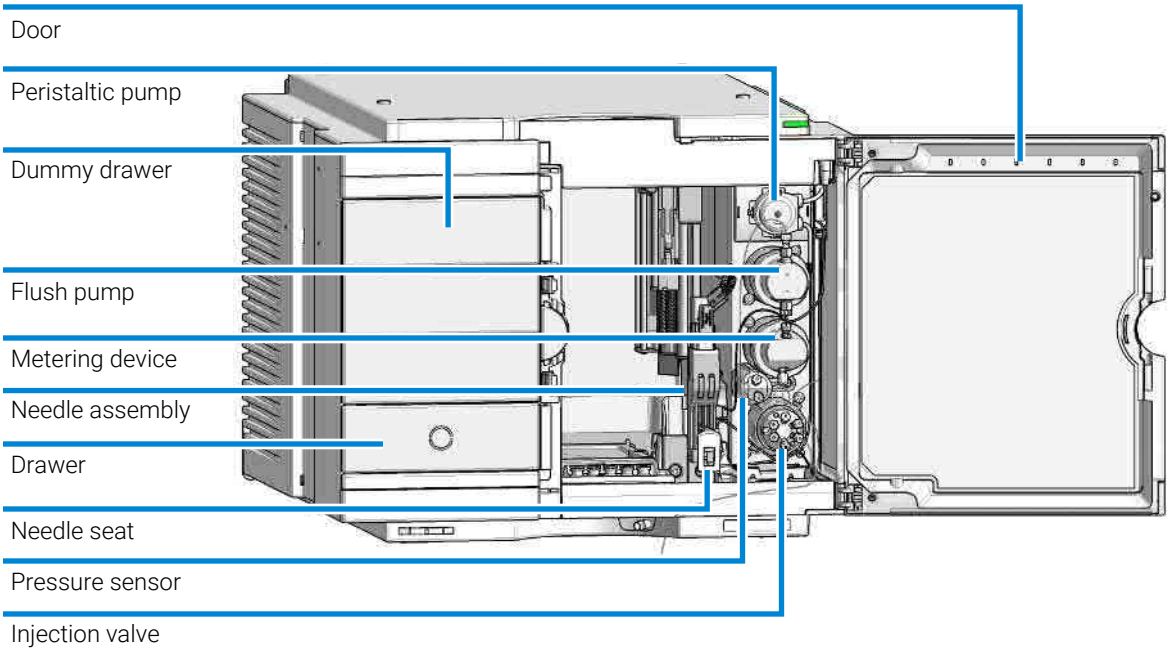


**Figure 29:** Main user accessible assemblies G4767A SFC Multisampler

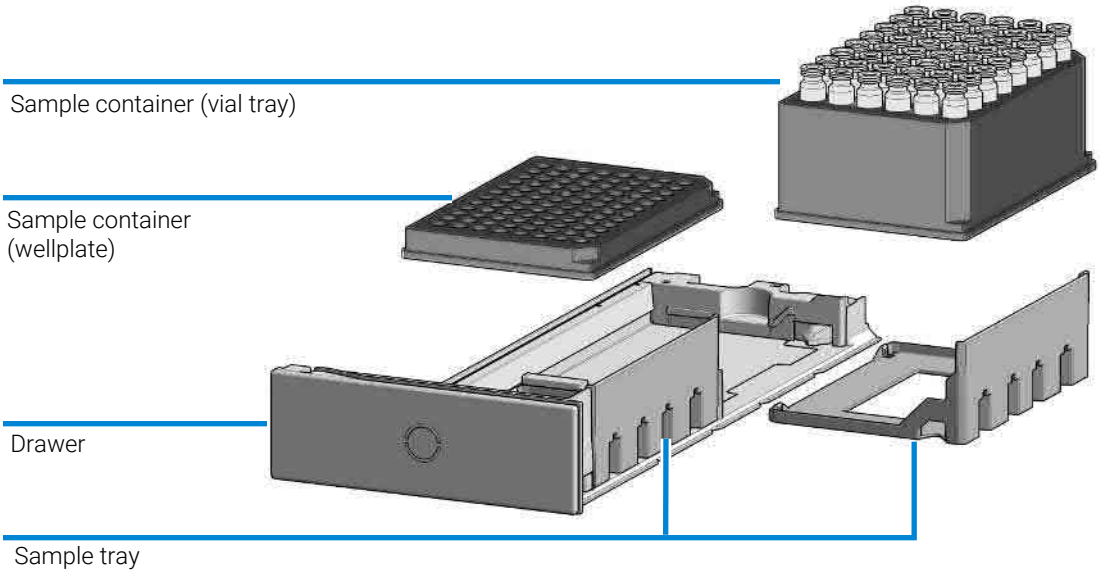


**Figure 30:** Overview of drawer, sample tray and sample container

# Safety Information Related to Maintenance

**WARNING** Fire and damage to the module

Wrong fuses

- Make sure that only fuses with the required rated current and of the specified type (super-fast, fast, time delay etc) are used for replacement.
- The use of repaired fuses and the short-circuiting of fuse-holders must be avoided.

**WARNING** Heavy weight

The module is heavy.

- Carry the module at least with 2 people.
- Avoid back strain or injury by following all precautions for lifting heavy objects.
- Ensure that the load is as close to your body as possible.
- Ensure that you can cope with the weight of your load.

**WARNING** Personal injury or damage to the product

Agilent is not responsible for any damages caused, in whole or in part, by improper use of the products, unauthorized alterations, adjustments or modifications to the products, failure to comply with procedures in Agilent product user guides, or use of the products in violation of applicable laws, rules or regulations.

- Use your Agilent products only in the manner described in the Agilent product user guides.

**WARNING** Electrical shock

Repair work at the module can lead to personal injuries, e.g. shock hazard, when the cover is opened.

- Do not remove the cover of the module.
- Only certified persons are authorized to carry out repairs inside the module.

**WARNING**

**Sharp metal edges**

**Sharp-edged parts of the equipment may cause injuries.**

- **To prevent personal injury, be careful when getting in contact with sharp metal areas.**

**WARNING**

**Toxic, flammable and hazardous solvents, samples and reagents**

**The handling of solvents, samples and reagents can hold health and safety risks.**

- **When working with these substances observe appropriate safety procedures (for example by wearing goggles, safety gloves and protective clothing) as described in the material handling and safety data sheet supplied by the vendor, and follow good laboratory practice.**
- **The volume of substances should be reduced to the minimum required for the analysis.**
- **Do not operate the instrument in an explosive atmosphere.**

**CAUTION**

Safety standards for external equipment

- If you connect external equipment to the instrument, make sure that you only use accessory units tested and approved according to the safety standards appropriate for the type of external equipment.

# Overview of Maintenance

It is necessary to perform periodic inspection of this instrument to ensure its safe use. It is possible to have these periodic inspections performed by Agilent service representatives on a contractual basis. For information regarding the maintenance inspection contract, contact your Agilent representative.

The following pages describe the maintenance (simple repairs) of the module that can be carried out without opening the main cover.

**Table 17:** Overview of maintenance (G4767A)

| Procedure | Typical interval (minimum) |
|---|---|
| Change needle/needle seat | 60000 needle into seat movements |
| Change peristaltic pump cartridge | 3000 h on time |
| Change rotor seal | As needed |
| Change metering seal | 30000 injections |

# Cleaning the Module

To keep the module case clean, use a soft cloth slightly dampened with water, or a solution of water and mild detergent. Avoid using organic solvents for cleaning purposes. They can cause damage to plastic parts.

**WARNING**

**Liquid dripping into the electronic compartment of your module can cause shock hazard and damage the module**

- **Do not use an excessively damp cloth during cleaning.**
- **Drain all solvent lines before opening any connections in the flow path.**

**NOTE**

A solution of 70 % isopropanol and 30 % water might be used if the surface of the module needs to be disinfected.

# Removal and Installation of the Front Door

**When**

- The instrument doors or the hinges are broken.

**Tools required**

| Qty. | p/n | Description |
|---|---|---|
| 1 | | Flathead screwdriver |

**Parts required** (Infinity III)

| Qty. | p/n | Description |
|---|---|---|
| | 5360-0024 | Door Multisampler |

**Parts required** (Infinity II)

| Qty. | p/n | Description |
|---|---|---|
| 1 | 5067-5415 | Door Assy |
| | | **OR** |
| 1 | G7167-68718 | Light Protection Kit |

**Preparations**

- Finish any pending acquisition job and return any plate on the workspace back to the hotel.

**NOTE**

For detailed information on position of the magnets, refer to Magnets on page 344

**CAUTION**

Magnetic fields

Magnets produce a far-reaching, strong magnetic field.

You can damage for example televisions, laptops, computer harddisks, credit cards, magnetic cards may be damaged as well.

— Keep magnets at least 25 mm away from devices and objects that could be damaged by strong magnetic fields.

**WARNING**

**Heart pacemakers**

**Magnets could affect the functioning of pacemakers and implanted heart defibrillators.**

**A pacemaker could switch into test mode and cause illness.**

**A heart defibrillator may stop working.**

— **Bearers of heart pacemakers or implanted defibrillators must stay off at least 55 mm from the magnets.**

1 Open the front door.

2 Press the release buttons and pull the front door out.

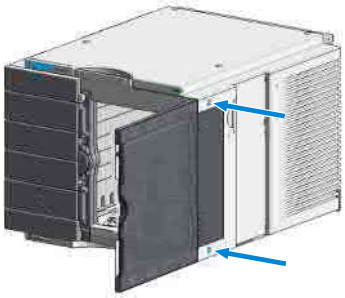

3 For the Installation of the front door. Insert the hinges into their guides and move the door in until the release buttons click into their final position.

# Remove the Needle Assembly

**When**

- The needle is visibly damaged.
- Leaks or blockages are observed.
- The limit for the needle interaction EMF counter is exceeded.
- The needle needs to be replaced as part of the yearly maintenance.

**Tools required**

| Qty. | p/n | Description |
|---|---|---|
| 1 | 8710-0510 | Open-end wrench 1/4-5/16 inch |

**Parts required**

| Qty. | p/n | Description |
|---|---|---|
| 1 | G4267-87201 | Needle Assembly |
| | | **OR** |
| 1 | G4267-87210 | Needle Assembly (slotted) for high injection volumes |

**Preparations**

- Finish any pending acquisition job.
- Stop the flow at the pump and remove the solvent lines from the eluent bottles to avoid spilling solvent.
- Close the shutoff valves at the pump if available.

**WARNING**

**Risk of injury by uncovered needle**

**An uncovered needle is a risk of harm to the operator.**

- **Do not open the safety lock of the needle assembly**
- **Be careful working at the z-robot.**
- **Wear safety goggles, when removing the needle assembly.**

**WARNING**

**Toxic, flammable and hazardous solvents, samples and reagents**

**The handling of solvents, samples and reagents can hold health and safety risks.**

- **When working with these substances observe appropriate safety procedures (for example by wearing goggles, safety gloves and protective clothing) as described in the material handling and safety data sheet supplied by the vendor, and follow good laboratory practice.**

**NOTE** It is recommended to always exchange the needle assembly and the needle seat at the same time to prevent premature leakage.

1 In the Agilent Lab Advisor software select **Service & Diagnostics** > **Maintenance Positions** > **Change Needle, Loop and Seat** , click **Start** and wait until the needle assembly is in maintenance position.

**OR:** In the Local Controller start the maintenance mode and select **Change Needle, Loop and Seat** function.

2 Open the front door.

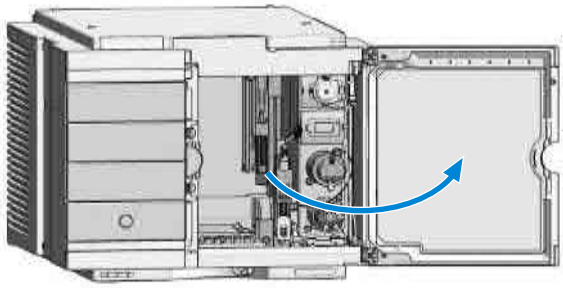

3 Lock the needle in the safety position.

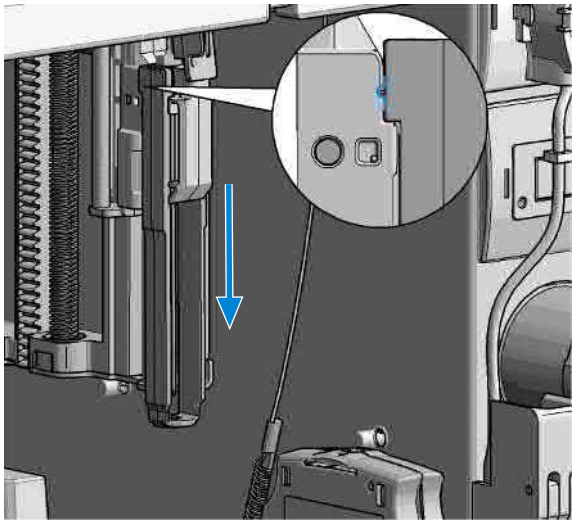

**NOTE** During normal operation of the Multisampler the needle assembly has to be unlocked.

**WARNING**

**Sharp needle**

**Uncovered needles may cause injuries**

— **Make sure the needle is in the safety lock position.**

**4** Remove the needle assembly by slightly pulling the needle cartridge.

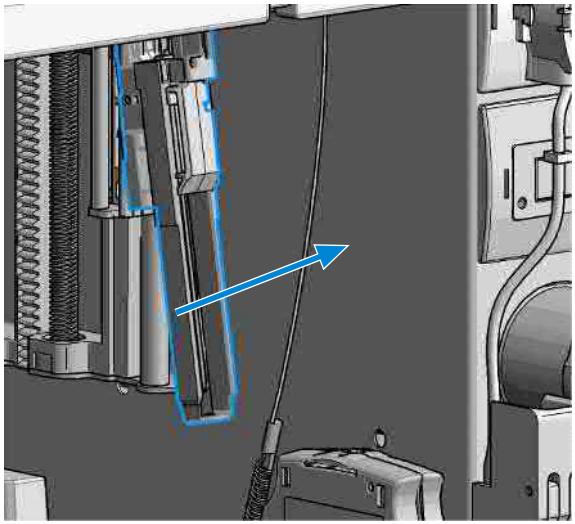

**5** Z-Robot (Z-arm coupler) without the needle assembly.

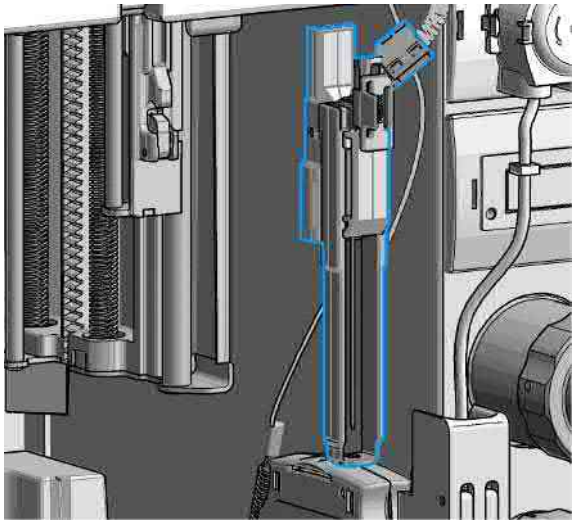

**CAUTION** Damage of the loop

The loop shape may be damaged if the loop is stretched or bent too far.

- Avoid to change the loop shape.
- Do not pull or bend the loop too far.

6 The needle assembly is still connected to the loop capillary.

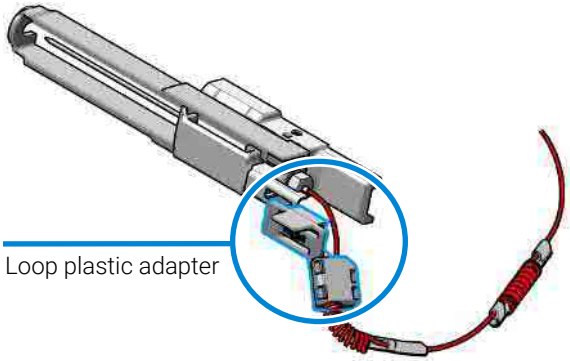


7 Remove the loop plastic adapter.

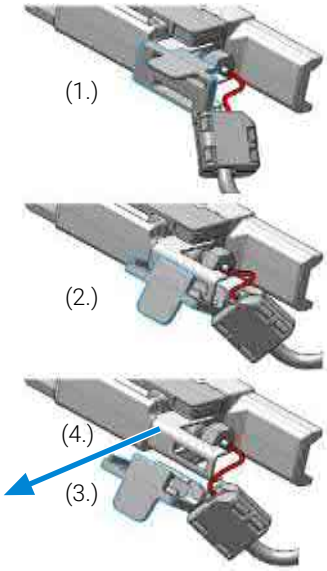


**NOTE** Do not open the rear plastic clamp.

**NOTE** If the plastic adapter is damaged the sample loop has to be replaced.

8 Use a 1/4 inch wrench to loosen the fitting of the loop capillary.

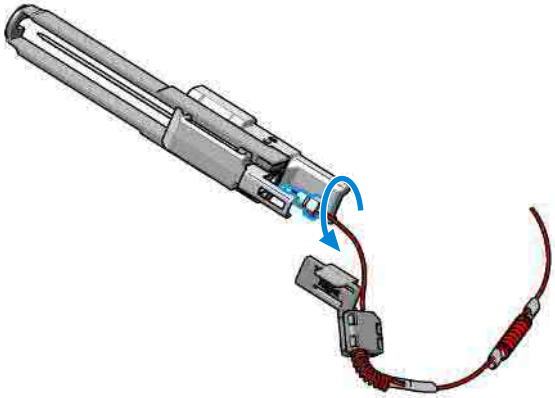

9 Remove the needle assembly.

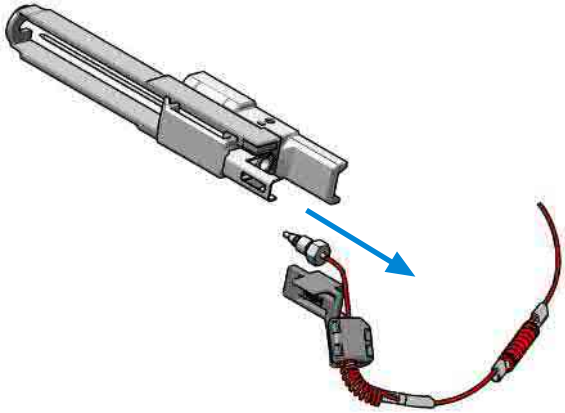

# Install the Needle Assembly

**When**

- The needle is visibly damaged.
- Leaks or blockages are observed.
- The limit for the needle interaction EMF counter is exceeded.
- The needle needs to be replaced as part of the yearly maintenance.

**Tools required**

| Qty. | p/n | Description |
|---|---|---|
| 1 | 8710-0510 | Open-end wrench 1/4-5/16 inch |

**Parts required**

| Qty. | p/n | Description |
|---|---|---|
| 1 | G4267-87201 | Needle Assembly |
| | | **OR** |
| 1 | G4267-87210 | Needle Assembly (slotted) for high injection volumes |

**Preparations**

- Finish any pending acquisition job.
- Stop the flow at the pump and remove the solvent lines from the eluent bottles to avoid spilling solvent.
- Close the shutoff valves at the pump if available.

**WARNING**

**Risk of injury by uncovered needle**

**An uncovered needle is a risk of harm to the operator.**

- **Do not open the safety lock of the needle assembly**
- **Be careful working at the z-robot.**
- **Wear safety goggles, when removing the needle assembly.**

**NOTE**

It is recommended to always exchange the needle assembly and the needle seat at the same time to prevent premature leakage.

1 Install the loop capillary on top of the needle cartridge (1.) and tighten the fitting hand tight (2.).

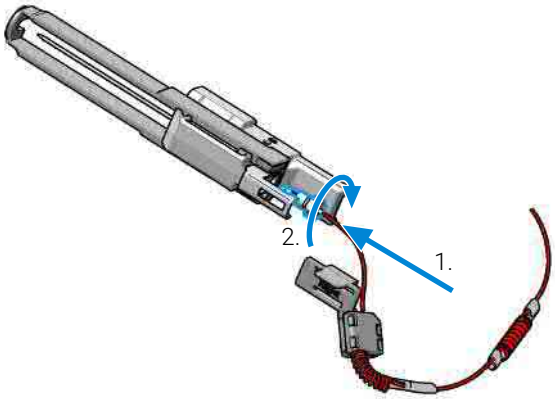


**NOTE** If the sample loop is changed, we recommend changing the needle as well.

**CAUTION** Blockages inside of the needle assembly union

— Do not overtighten the fitting. A quarter turn should be sufficient.

2 Use a 1/4 inch wrench to tighten the fitting of the loop capillary.

**3** Install loop plastic adapter.

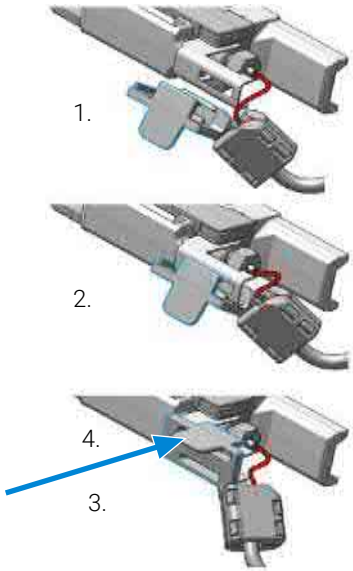


**NOTE** Verify the sample loop info on the plastic adapter. A left or a right sample loop must be installed in the correct slot of the needle parkstation. For single needle, the default position is on the right.

**NOTE** If the plastic adapter is damaged the sample loop has to be replaced.

4 Pinch and reinsert the needle assembly and the connected loop capillary into the z-arm coupler.

NOTE

Check the tension of the loop capillary. This must be forced and guided to the hydraulic box to prevent it from being caught by the Z-drive.

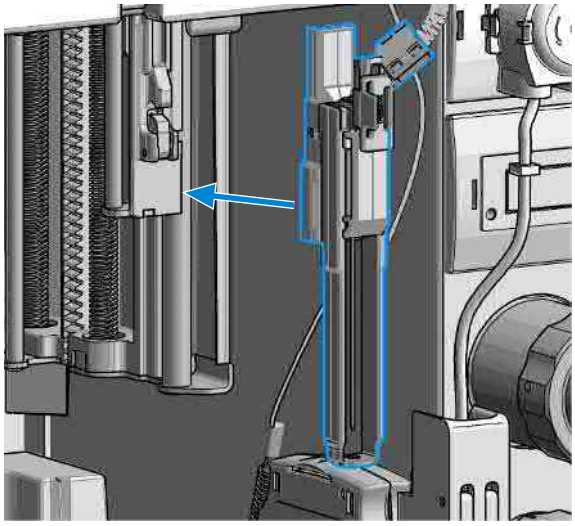

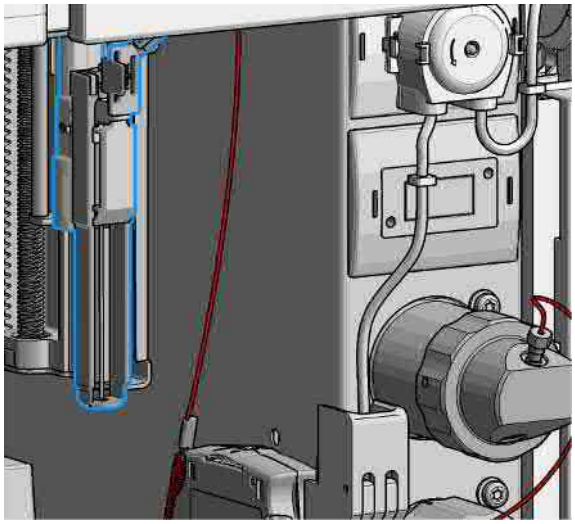

5 Close the front door.

6 In the Local Controller close **Change needle /seat**.

**OR**

In the Agilent Lab Advisor software **Change needle/loop** , click **Back** and wait until the needle assembly is in the needle park station.

7 Perform a **Pressure Test**.

# Exchange the Needle Seat

**When**

- When seat is visibly damaged, blocked or leaks.

**Tools required**

| Qty. | p/n | Description |
|---|---|---|
| 1 | 8710-0510 | Open-end wrench 1/4-5/16 inch |

**Parts required**

| Qty. | p/n | Description |
|---|---|---|
| 1 | G4267-87012 | High Pressure Needle Seat, 0.12 mm (PEEK) |
| | | **OR** |
| 1 | G4267-87020 | High Pressure Seat Assembly 0.075 mm (PEEK) |

**Preparations**

- Finish any pending acquisition job.
- Stop the flow at the pump and remove the solvent lines from the eluent bottles to avoid spilling solvent.
- Close the shutoff valves at the pump if available.

**WARNING**

**Risk of injury by uncovered needle**

**An uncovered needle is a risk of harm to the operator.**

- **Do not open the safety lock of the needle assembly**
- **Be careful working at the z-robot.**
- **Wear safety goggles, when removing the needle assembly.**

**NOTE**

Refer to the Agilent 1290 Infinity II Ultra Low Dispersion Kit Technical Note (p/n 01200-90105) for further details.

1 In the Local Controller start the maintenance mode and select Change needle/seat function.

**OR**

In the Agilent Lab Advisor software select Service & Diagnostics in the system screen Maintenance Positions > Change Needle , click Start and wait until the needle assembly is in maintenance position.

2 Open the front door.

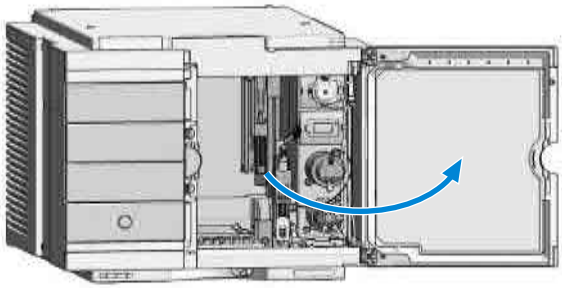

3 Disconnect the seat capillary from the Injection valve.

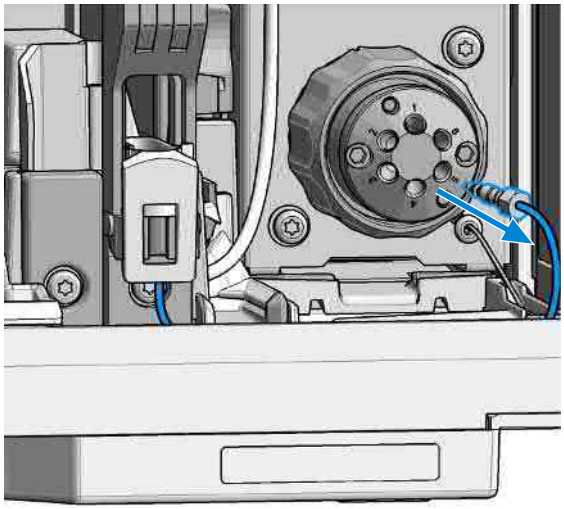

4 Slightly pull (1.) the front clip which holds the needle seat in position. Then carefully lift up (2.) the complete leak tube needle assembly from the holder.

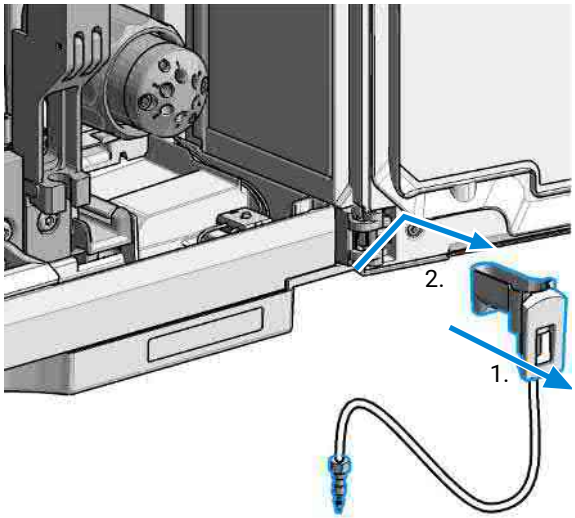


5 Insert the new Needle seat (1.). Press it firmly in position (2.).

NOTE

Verify that the needle seat clip is locked in the needle park station.

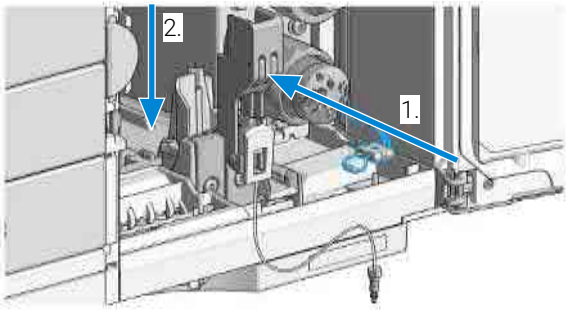

6 Reconnect the seat capillary to the injection valve.

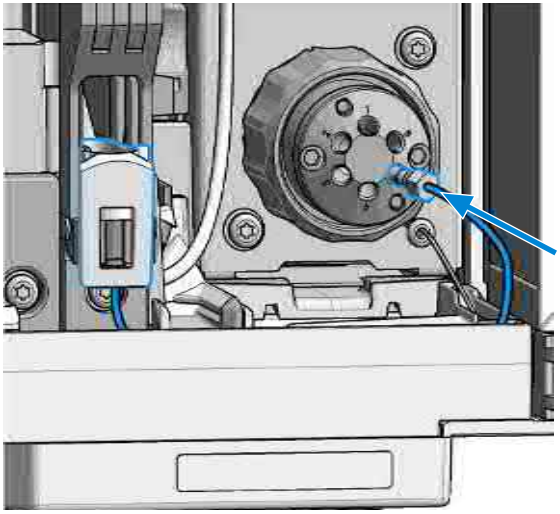

7 Close the front door.

8 In the Local Controller close **Change needle /seat**.

**OR**

In the Agilent Lab Advisor software **Change needle** click **End** and wait until the needle assembly is in the needle park position.

9 Perform a **Pressure Test**.

**NOTE** Always flush the sampler with fresh solvent and perform a pressure test before using the **Auto Clean** or **Prime** function after exchanging a needle seat.

# Replace the Rotor Seal

**When**

- Injection volume reproducibility problems are observed.
- Leaks or blockages are observed.
- The limit for the rotor seal EMF counter is exceeded.
- The rotor seal needs to be replaced as part of the yearly maintenance.

**Tools required**

| Qty. | p/n | Description |
|---|---|---|
| 1 | 8710-0510 | Open-end wrench 1/4-5/16 inch |
| 1 | 8710-2394 | Hex key 9/64 inch 15 cm long T-handle |
| 1 | | Cleaning tissue and appropriate solvent like isopropanol or methanol |

**Parts required**

| Qty. | p/n | Description |
|---|---|---|
| 1 | 5068-0279 | Rotor Seal, 3-position/6-port FI Valve<br>**OR** |
| 1 | 5068-0280 | Stator<br>replacement only necessary in case of wear |

**CAUTION**

Reduced life time of the injection valve

Component cleanliness is crucial for the life time of the injection valve.

— Replace the rotor seal in a clean environment.

**NOTE**

Please bear in mind that depending on which valve you have installed the images may slightly differ from the actual item.

**1** Open the front door.

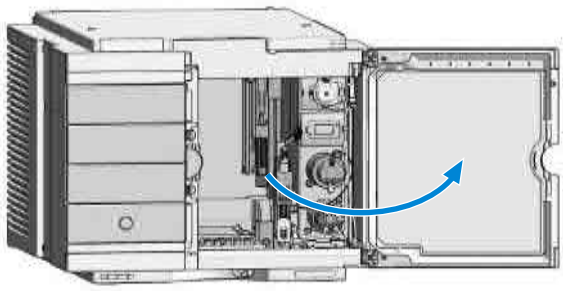

2 Remove all capillaries from the injection valve with a 1/4 inch wrench.

NOTE

Remember the correct plumbing.
Check the drawing on the side cover of the hydraulic box for correct plumbing.

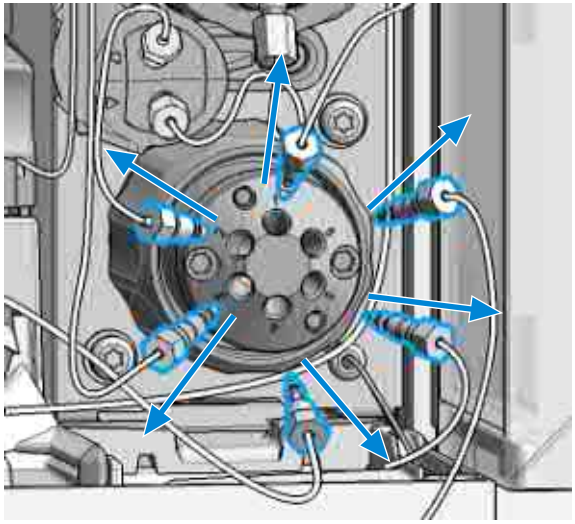

3 Use a 9/64 inch hex driver to unscrew the two socket screws which hold the stator head in place.

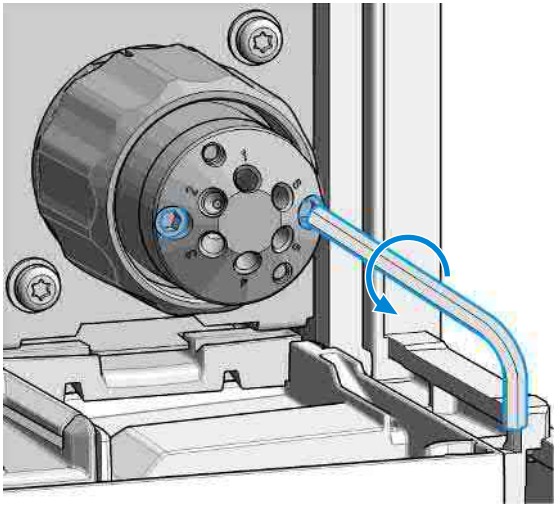

**CAUTION**

Damage to the stator head

The polished sealing surface of the stator head contains six ports that access handling can easily damage.

— Avoid touching the polished surface of the stator head.

— Never place the polished surface on a hard surface.

**4** Carefully remove the stator head. To ensure that the sealing surface of the stator head is not damaged, place it on its outer face.

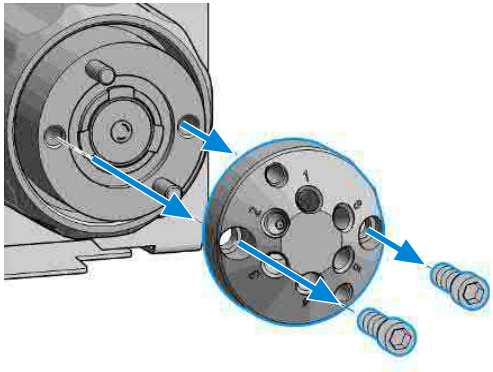

5 Remove the rotor seal.

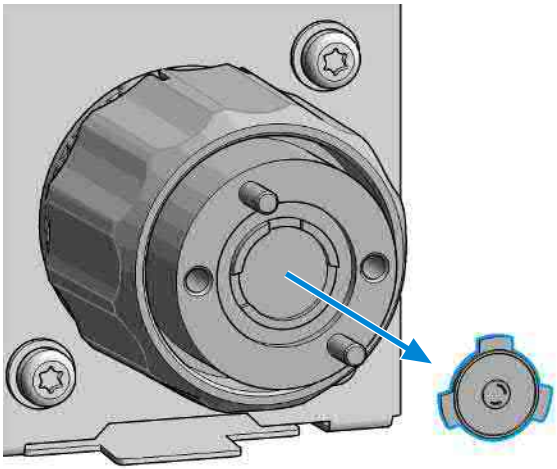

**NOTE**

Remove the rotor seal with a small tool, gently pry the rotor seal away from the drive.
Examine the rotor sealing surface for scratches and nicks.
If scratches are visible the rotor seal must be replaced.
If no scratches are visible clean all the parts with an appropriate solvent, taking care that no surfaces get scratched.

**CAUTION** Damage to the rotor seal and cross-port leaks

- Before you replace the rotor seal, clean the stator.
- Inspect the stator head and swab it with the appropriate solvent. If more stringent cleaning is required, use a sonicator. Inspect the remaining valve components for contamination. Clean them as necessary.
- If the stator head is scratched, replace it.

6 Install new rotor seal.

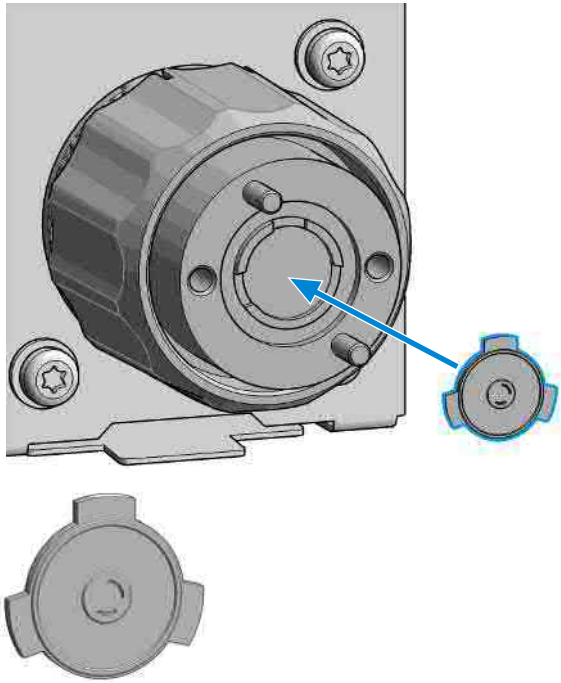

**NOTE** Make sure that the rotor sealing surface with its engraved flow passages is facing out. The pattern is asymmetrical to prevent improper placement.

**NOTE** The Bio-inert injection valve additionally has a stator face installed.

7 Reinstall the stator head. The index pins on the drive and the stator head must engage in the corresponding holes. Insert the two socket head screws.

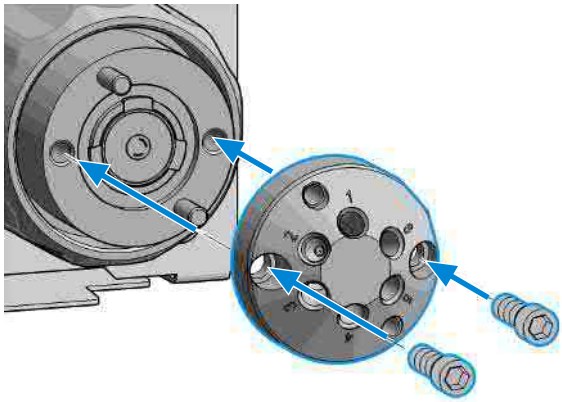

8 Using a 9/64 in. L-Hex wrench, tighten each screw gently until you feel resistance (approximately fingertight). Tighten each screw by 1/8 turn, and then tighten each screw again, until the stator is secured to the driver.

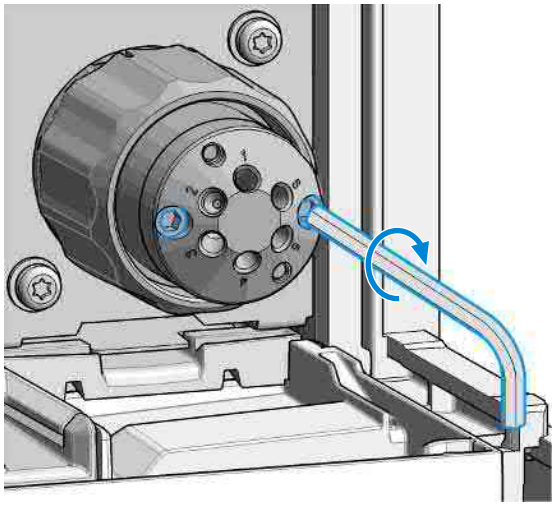

**NOTE** Do not over-tighten the screws. The screws hold the assembly together and do not affect the sealing force. The sealing force is automatically set as the screws close the stator head against the valve body.

9 Reconnect all capillaries to the proper injection valve ports with a 1/4 inch wrench.

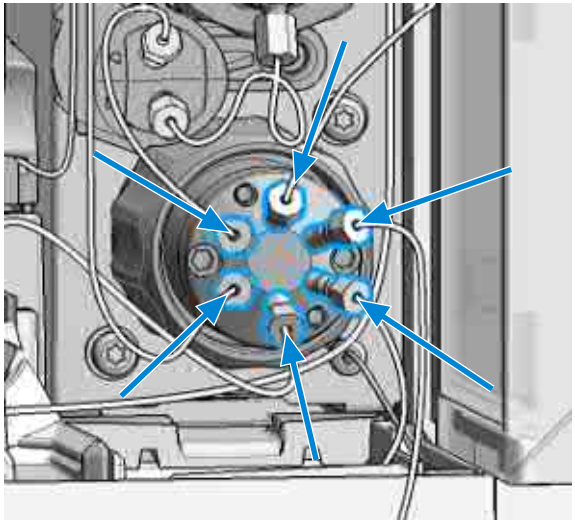

10 Install the waste line.

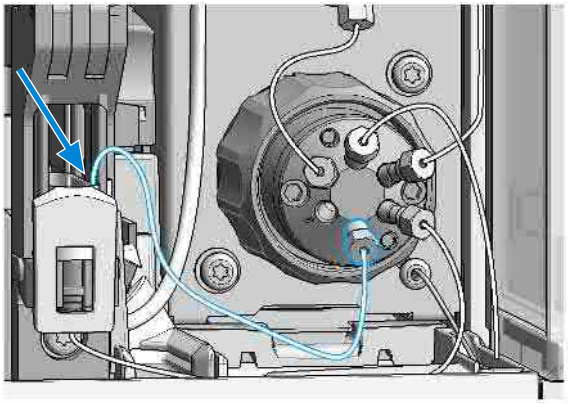

11 Close the front door.

12 Perform a **Pressure Test**.

# Replace the Injection Valve/Replace the Idex Valve

**When**

- Add new injection valve or replace defective injection valve.

**Tools required**

| Qty. | p/n | Description |
|---|---|---|
| 1 | 8710-0510 | Open-end wrench 1/4-5/16 inch |

**Parts required**

| Qty. | p/n | Description |
|---|---|---|
| 1 | 5067-6680 | 3-position/6-port FI valve 800 bar |

**Preparations**

- Switch off the power of the Multisampler

**NOTE**

Please bear in mind that depending on which valve you have installed the images may slightly differ from the actual item.

**1** Remove all capillaries from the injection valve with a 1/4 inch wrench.

**NOTE**

Remember the correct plumbing.
Check the drawing on the side cover of the hydraulic box for correct plumbing.

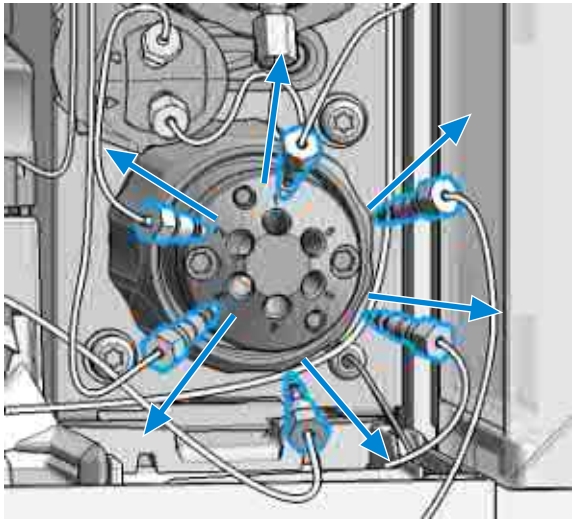

2 Turn the spanner nut counter clockwise until the injection valve head detaches from the hydraulic box (Do not use wrenches on the spanner nut).

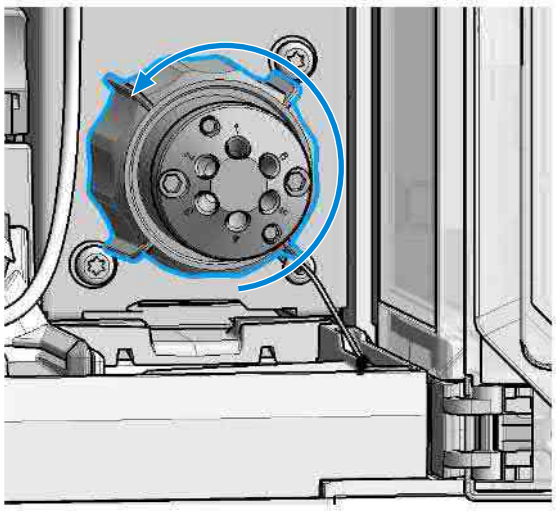

3 Remove the spanner nut from the injection valve head.

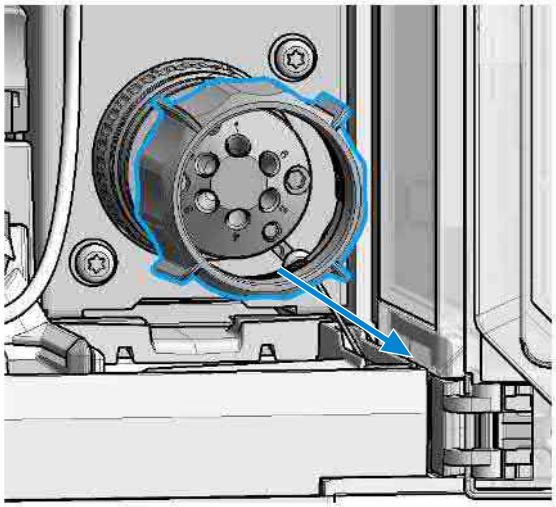

4 Take the replacement injection valve head and insert it into the open actuator slot of the hydraulic box. Rotate until the unions at the base of the replacement injection valve head and the valve actuator engage.

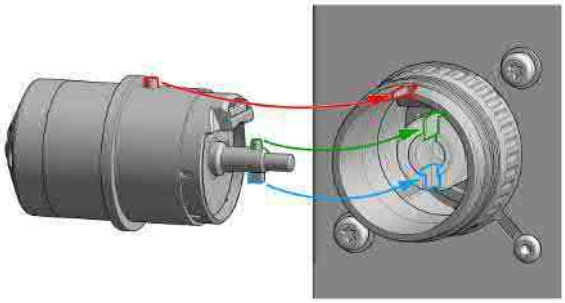

**OR**

If the outside pin does not fit into the outside groove, you have to turn the valve head until you feel that the two pins snap into the grooves. Now you should feel additional resistance from the valve drive while continue turning the valve head until the pin fits into the groove.

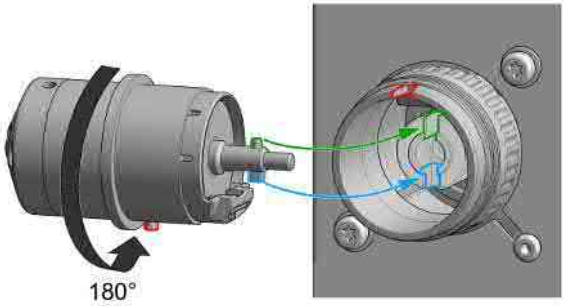


**NOTE**

Check the orientation of the rear side.
Verify the correct position of the Valve TAG.

5 Continue to rotate until the clocking pin in the injection valve head align with the notch in the housing and press the replacement injection valve head into the actuator.

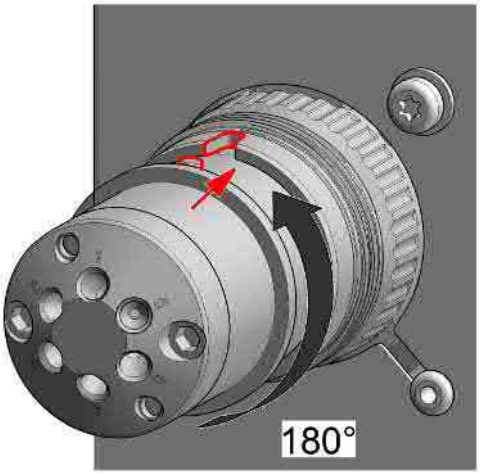


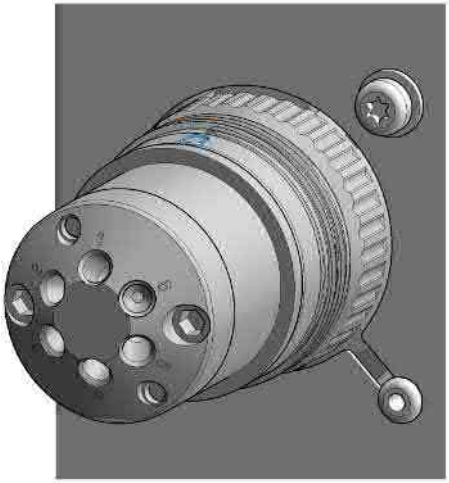

6 Replace the spanner nut (1.) and tighten clockwise (2.) (Hand tighten only, do not use wrenches on the spanner nut).

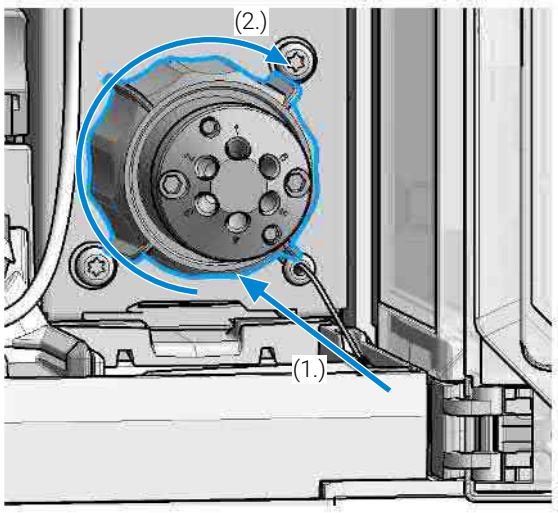


7 Reconnect all capillaries to the proper injection valve ports with a 1/4 inch wrench.

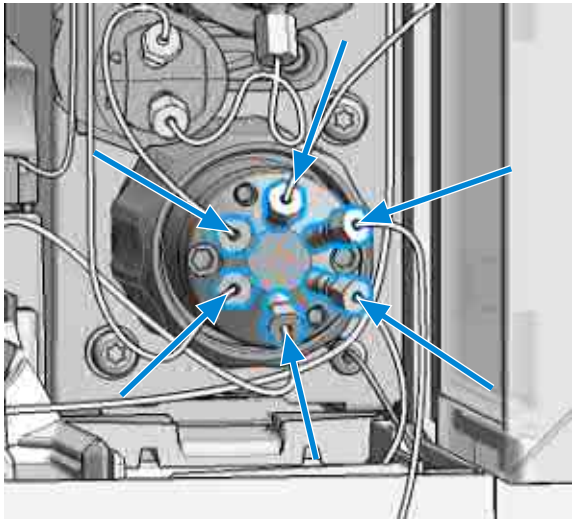

# Remove the Metering Seal

**When**

- When poor injection volume reproducibility or when metering device / analytical head is leaking.

**Tools required**

| Qty. | p/n | Description |
|---|---|---|
| 1 | 8710-0510 | Open-end wrench 1/4-5/16 inch |
| 1 | 8710-2392 | 4 mm Hex key |
| 1 | 01018-23702 | Insert tool, **OR** |
| 1 | G4226-43800 | Seal insert tool |

**1** In the Local Controller start the maintenance mode and select Service Position.

**OR**

In the Agilent Lab Advisor software select Service & Diagnostics in the system screen (Tools) > Maintenance Positions > Change Metering Device , click start and wait until the metering device is in maintenance position.

**2** Open the front door.

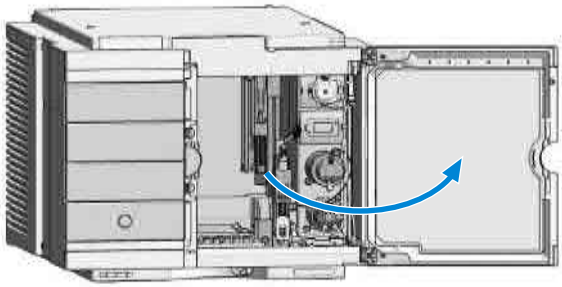

3 Disconnect all capillaries from the metering device.

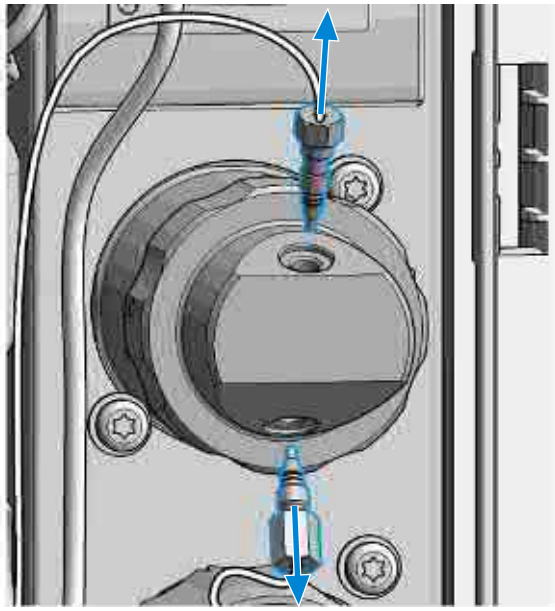

4 To release the bayonet lock, push (1.) and rotate (2.) the analytical head a quarter left. Then you can pull and detach the analytical head assembly from the actuator (3.).

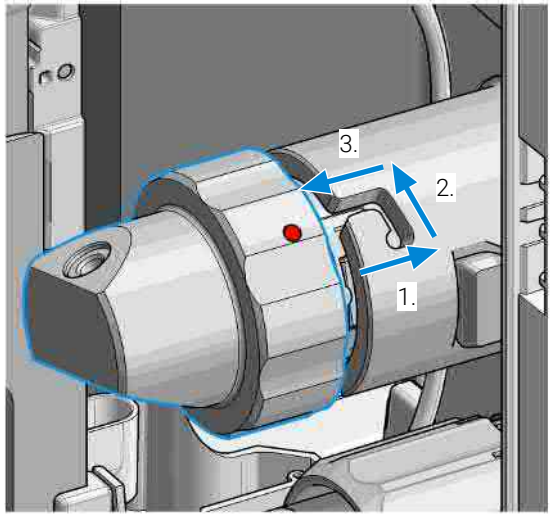

5 Remove the metering device.

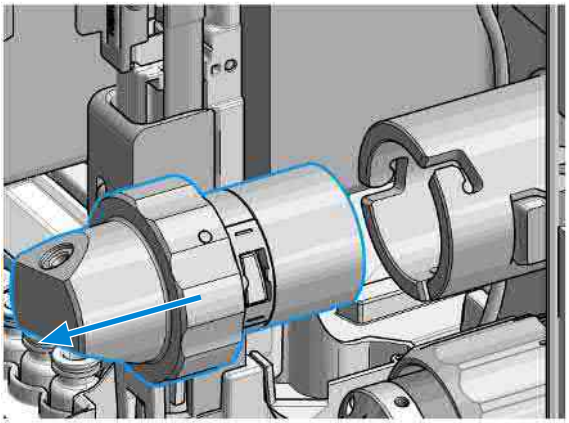

6 Take the metering device. Push against the rear side of the metering device and rotate a quarter left to release the bayonet lock.

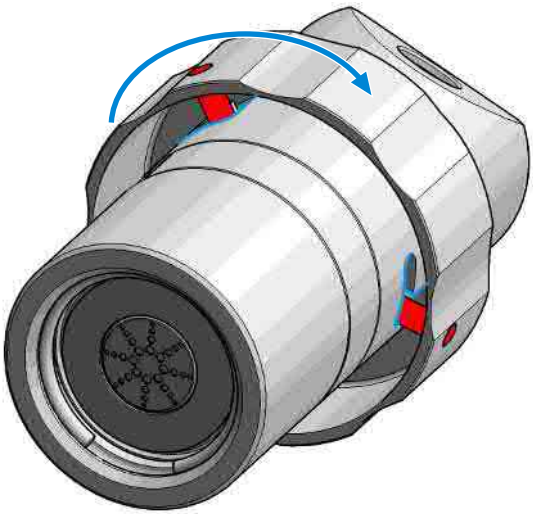

7 Now you can separate the analytical head and head body.

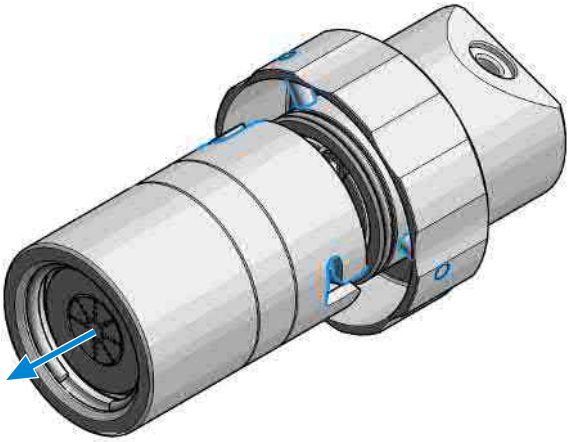

8 Remove the piston out of the head body.

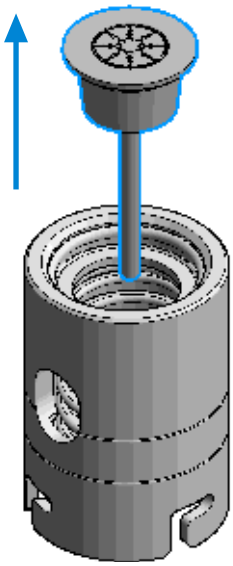

9 Inspect the piston for cleanliness and scratches.

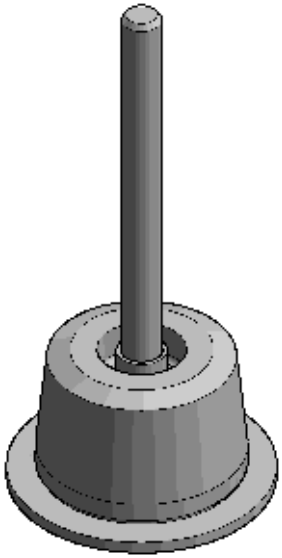

- If dirty:
  Clean the piston with an appropriate solvent.
- If scratched:
  Replace the piston by a new one.

**10** Take the analytical head and remove the three screws on the rear side, which holds the support ring in place. Check the support ring for any damages.

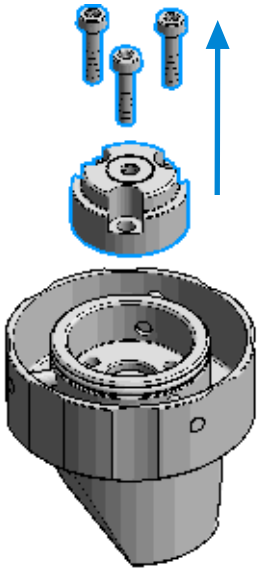

**11** Carefully remove the metering seal using the steel side of the insert tool. Clean the chamber with an appropriate solvent and ensure that all particulate matter is removed.

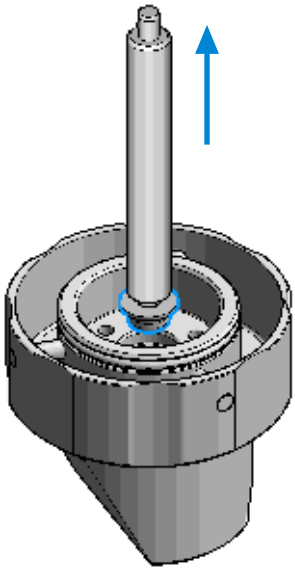

# Install the Metering Seal

**When**

- After removing the metering seal.

**Tools required**

| Qty. | p/n | Description |
|---|---|---|
| 1 | 8710-0510 | Open-end wrench 1/4-5/16 inch |
| 1 | 5023-2524 | Hex Key Set<br>(part of the G7120-62708 InfinityLab LC Series Tool Kit) |
| 1 | 01018-23702 | Insert tool<br>(for 100 µL seals) |
| 1 | G4226-43800 | Seal insert tool, **OR**<br>(for 40 µL seals) |
| 1 | | Cleaning tissue and appropriate solvent like isopropanol or methanol |

**Parts required**

| Qty. | p/n | Description |
|---|---|---|
| 1 | 0905-1719 | Metering Seal, 100 µL |
| 1 | 5067-5678 | Piston, 100 µL, Zirconium oxide<br>Replacement only necessary in case of wear (Optional) |

**Preparations**

- Removing the metering seal, see Remove the Metering Seal on page 235.

1 Install the new metering seal using the plastic side of the insert tool. Press it firmly into position. Avoid any offset angle as it might deform the seal.

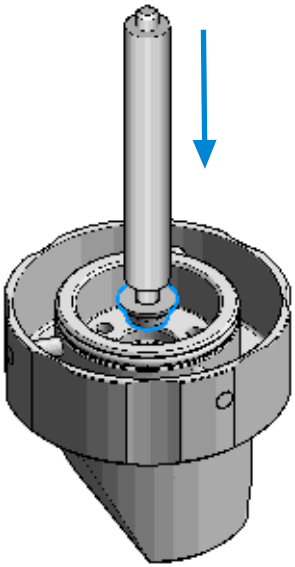

2 Reassemble the support ring.

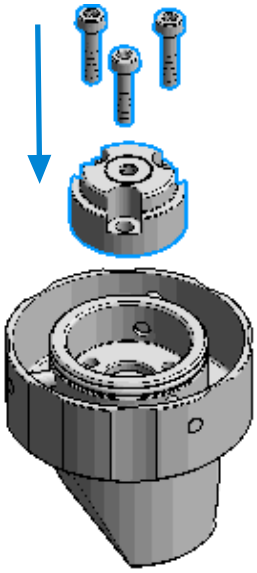

3 Make sure to comply to the following order of actions:

1. Tighten the three screws fingertight, then
2. Tighten the screws a little at a time to keep the support ring surface *parallel* (important!) to the surface of the analytical head.

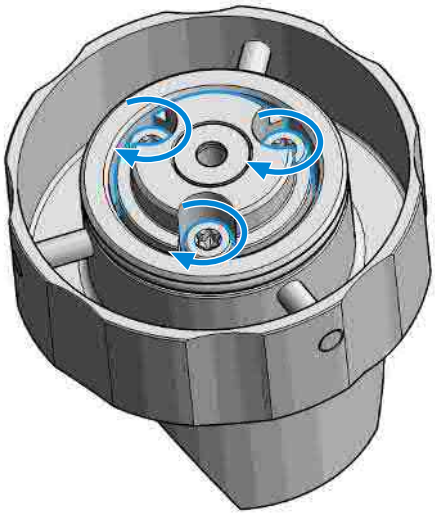

4 Use the twist and lock bayonet mechanism to reassemble the analytical head assembly. Push the two parts together to couple the head body with the analytical head. Once the pin reaches the bottom of the slot, one or both parts

are rotated so that the pin slides along the horizontal arm of the L until it reaches the *serif*. The spring then pushes the male connector up into the *serif* to keep the pin locked into place.

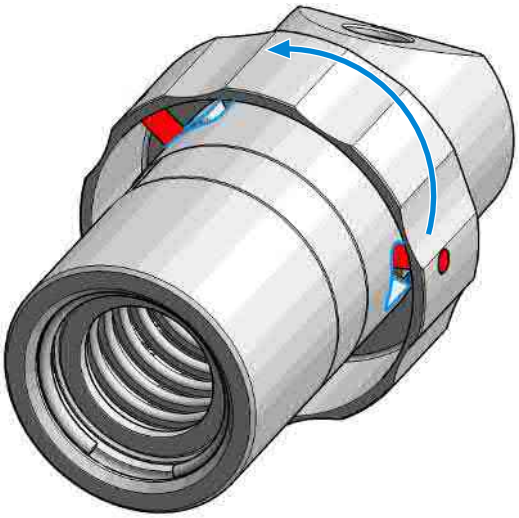

5 Press the piston carefully into the housing of the head body and the seal.

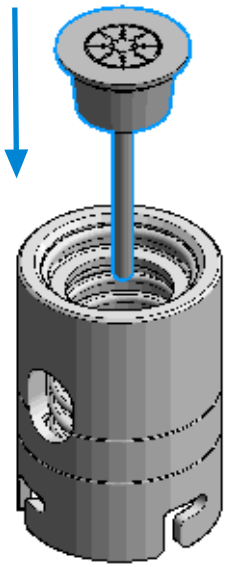

6 Reinstall the complete analytical head with the actuator housing

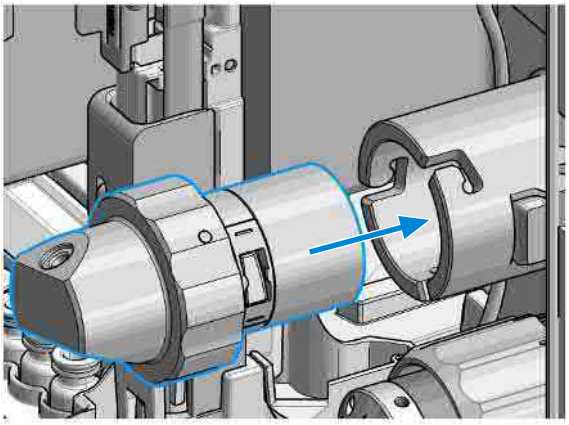

NOTE For proper installation, check the correct position of the tag.

7 Fix the analytical head by pushing (1.) and rotating (2.) via twist and lock bayonet mechanism.

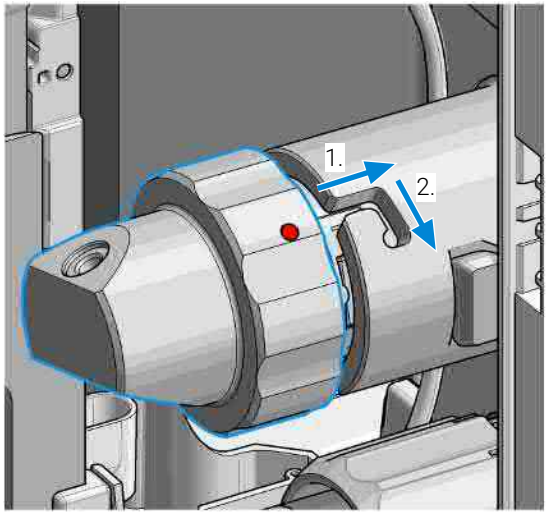


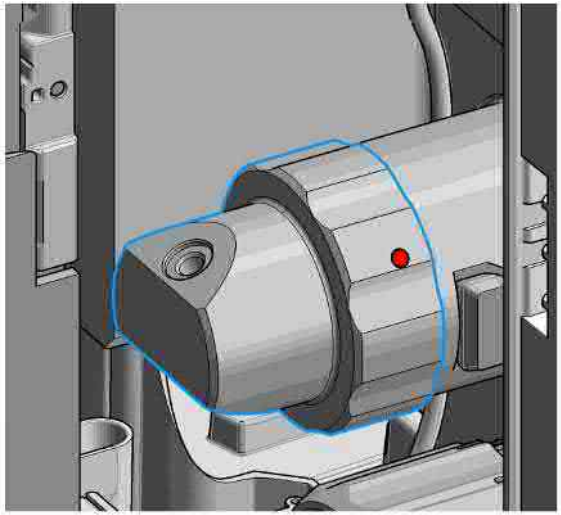

8 Reconnect the capillaries.

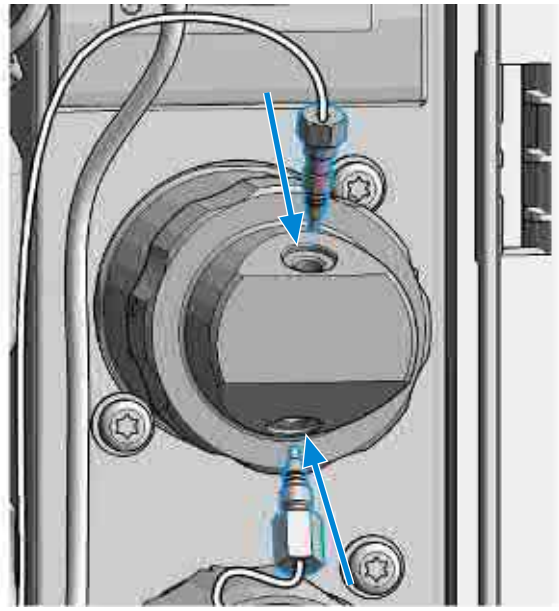

9 Close the front door.

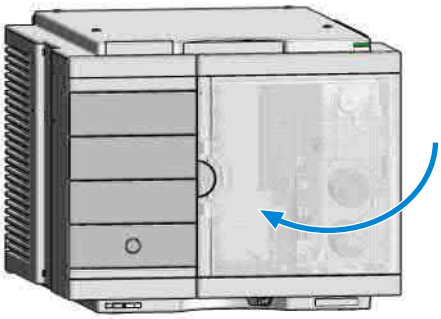

10 In the Local Controller exit the maintenance mode and select **Change metering device** function.

**OR**

In Agilent Lab Advisor software system screen exit
Service & Diagnostics (Tools) > Maintenance Positions > Change Metering Device
click End and wait until the metering device is in Home position.

11 Perform a Pressure Test.

# Replace the Peristaltic Pump Cartridge

**When**

- The tubing is blocked or damaged.
- The peristaltic cartridge needs to be replaced as part of the yearly maintenance.

**Parts required**

| Qty. | p/n | Description |
|---|---|---|
| 1 | 5065-4445 | Peristaltic pump cartridge, **OR** (default) |
| 1 | 5042-8507 | Seal wash pump cartridge, **OR** |
| 1 | 5065-9952 | Peristaltic pump with Chemsure tubing |

**Preparations**

- Finish any pending acquisition job.
- Remove the solvent line from the wash bottle to avoid spilling solvent.

**WARNING**

**When opening capillary or tube fittings solvents may leak out.**

**The handling of toxic and hazardous solvents and reagents can hold health risks.**

— **Please observe appropriate safety procedures (for example, goggles, safety gloves and protective clothing) as described in the material handling and safety data sheet supplied by the solvent vendor, especially when toxic or hazardous solvents are used.**

**NOTE**

The peristaltic pump cartridge is a replaceable unit. The tubing inside the pump is not replaceable.

**1** Open the front door.

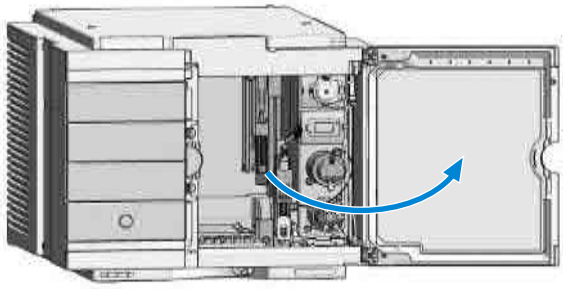

2 Press the two clips on the front of the peristaltic pump cartridge.

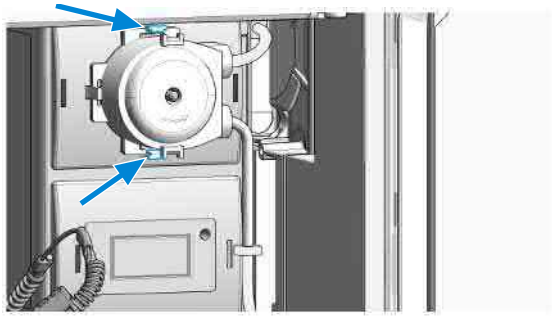

3 Pull the cartridge forward off the motor shaft.

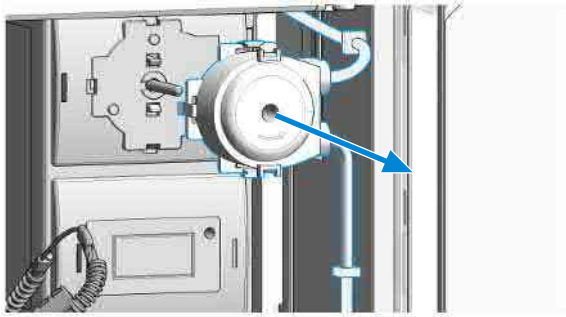

4 Disconnect the tubing coupler leading to the wash port and the tubing coupler coming from the solvent bottle.

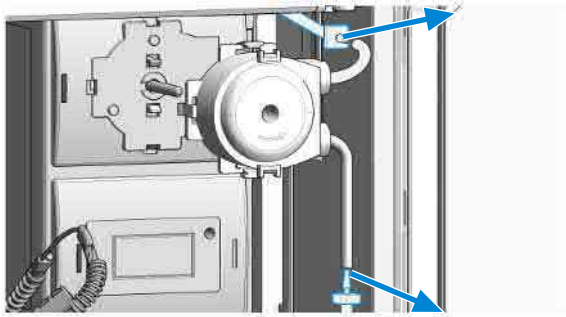

5 Push the new cartridge onto the motor shaft until the clips click into place.

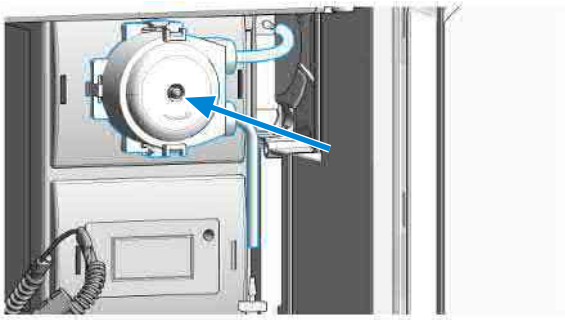

6 Connect the wash port tubing to the upper tubing of the new cartridge (use sand paper to get a good grip on the tubing).

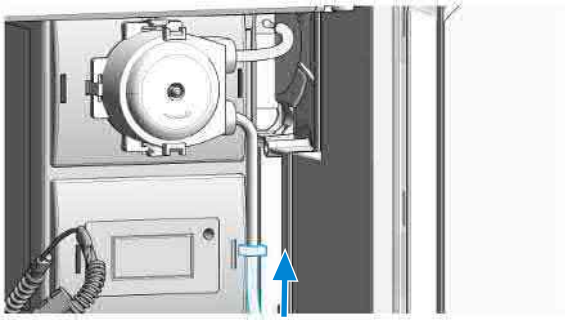

7 Connect the inlet filter of the solvent bottle again. Use the syringe to draw enough solvent for completely filling of the peristaltic pump tubing before continuing to prime the peristaltic pump.

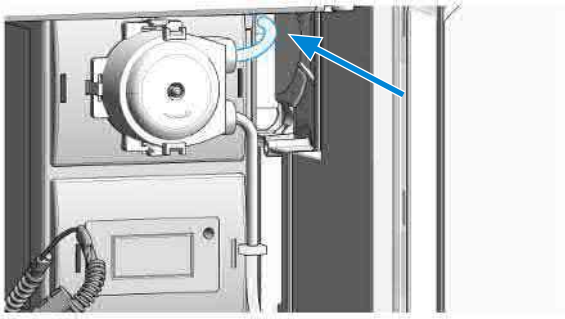

8 Close the front door.

# Replace the Flush Head Seal

**When**

- Flush head is leaking

**Tools required**

| Qty. | p/n | Description |
|---|---|---|
| 1 | 8710-0510 | Open-end wrench 1/4-5/16 inch |
| 1 | 8710-2392 | 4 mm Hex key |

**Parts required**

| Qty. | p/n | Description |
|---|---|---|
| 1 | 5067-5918 | Flush Head Seal 500 µL |

**Preparations**

- Cleaning tissue
- Appropriate solvent like isopropanol or methanol

1 In the Local Controller start the maintenance mode and select Service Position.

**OR**

In the Agilent Lab Advisor software select Service & Diagnostics in the system screen (Tools) > Maintenance Positions > Change Metering Device , click start and wait until the metering device is in maintenance position.

2 Open the front door.

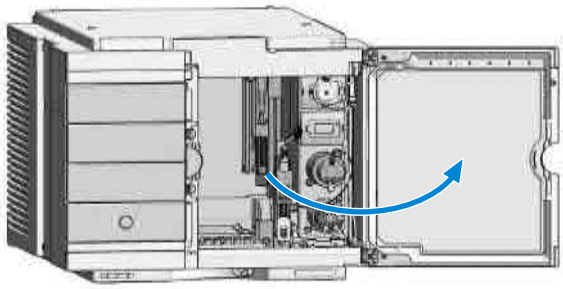

3 Remove capillaries and valves from the flush head.

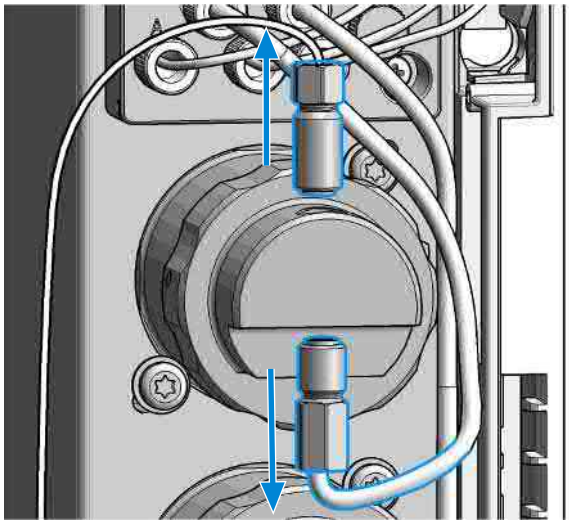

4 Press and turn the Flush Head a quarter left (bayonet fitting) and detach the metering device from the actuator.

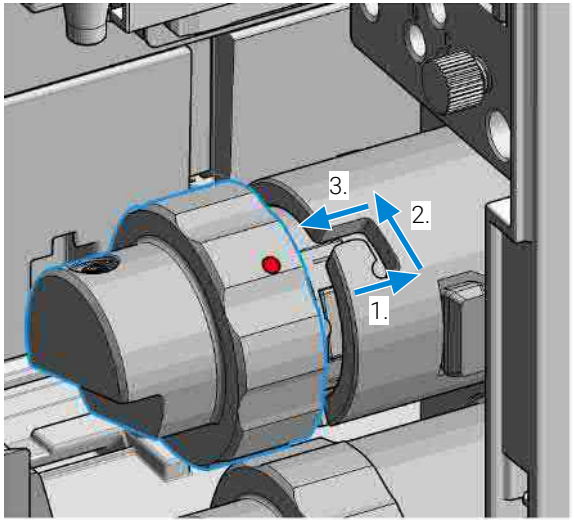

5 Pull the flush head away from the hydraulic box

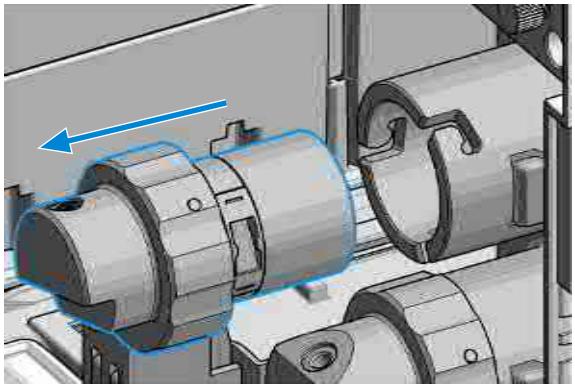

6 Press against the rear side of flush head and turn a quarter left (bayonet fitting) and separate the flush head, head body and the piston.

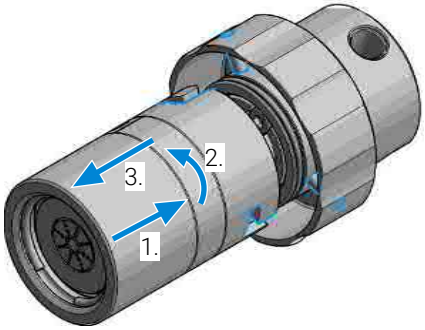


**NOTE** Be careful not to break the piston.

7 Remove the piston from the head body.

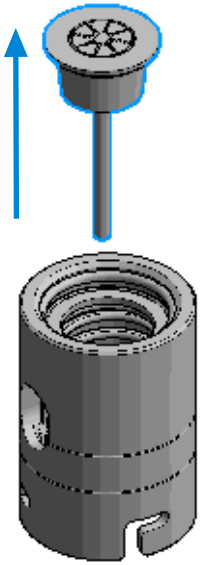

8 Carefully remove the seal from the tip of the piston.

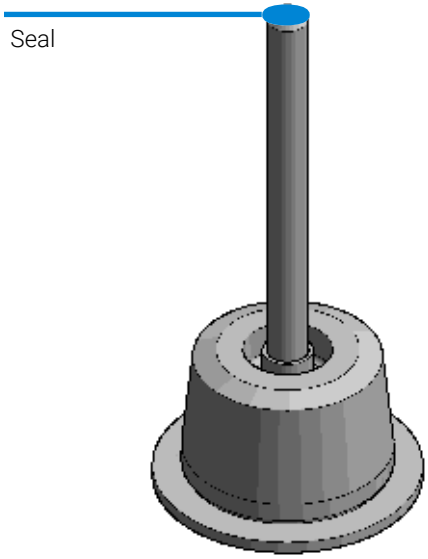

**9** Reassemble the flush head and the head body (without piston).

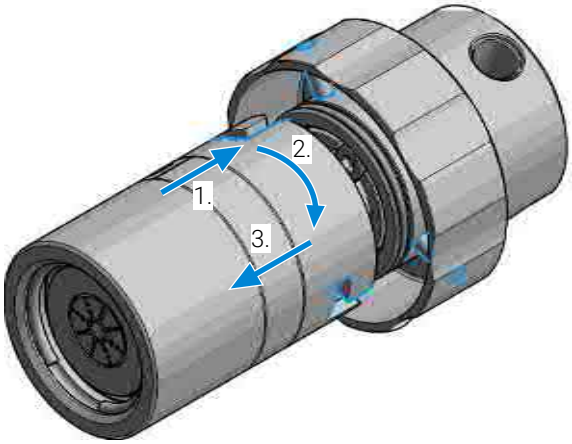


**10** Carefully insert the piston with the new metering seal into the flush head assembly.

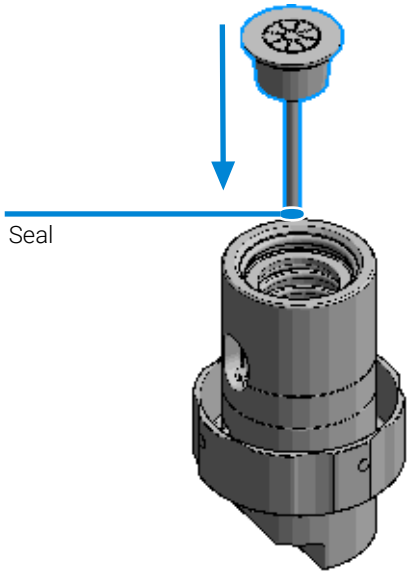

**11** Reinstall the flush head to the actuator housing.

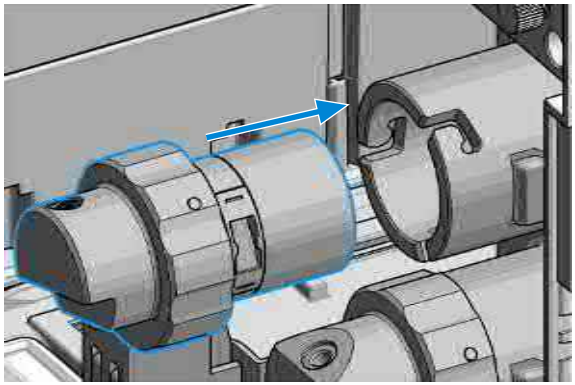

**NOTE** For proper installation, check the correct position of the tag.

**12** Fix the flush head.

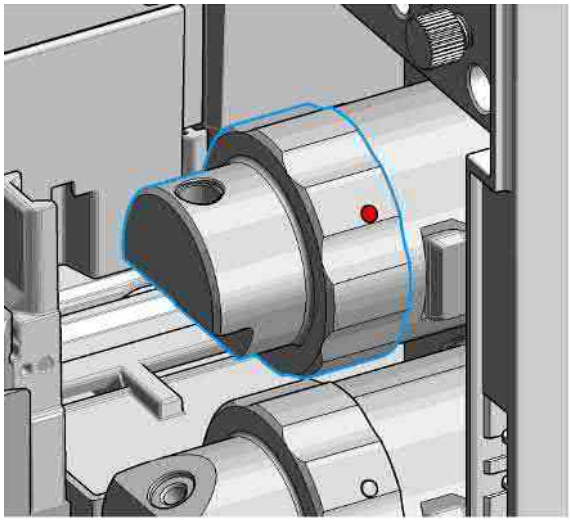

**13** Connect the capillaries.

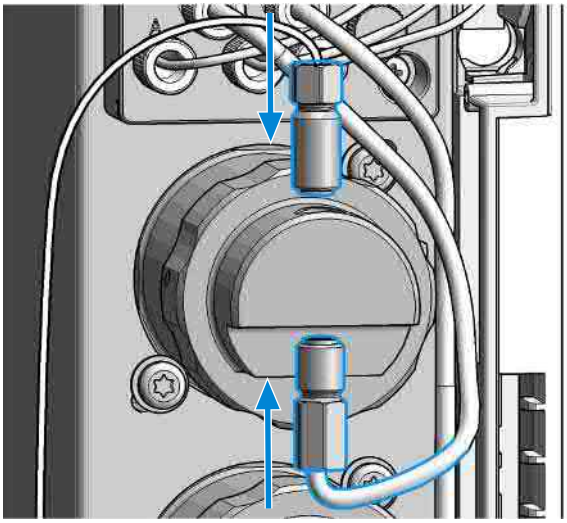

**14** Close the front door.

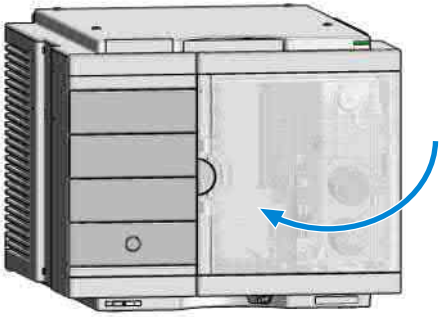

# Remove the Sample Loop-Flex

**When**

- If the sample loop flex is defective, blocked, or damaged.

**Tools required**

| Qty. | p/n | Description |
|---|---|---|
| 1 | 8710-0510 | Open-end wrench 1/4-5/16 inch |

**Preparations**

- Finish any pending acquisition job.
- Return any plate on the workspace back to the hotel.

**WARNING**

**Risk of injury by uncovered needle**

**An uncovered needle is a risk of harm to the operator.**

- **Do not open the safety lock of the needle assembly**
- **Be careful working at the z-robot.**
- **Wear safety goggles, when removing the needle assembly.**

1 In the Agilent Lab Advisor software select Service & Diagnostics > Maintenance Positions > Change Needle, Loop and Seat , click Start and wait until the needle assembly is in maintenance position.

**OR:** In the Local Controller start the maintenance mode and select Change Needle, Loop and Seat function.

2 Open the front door.

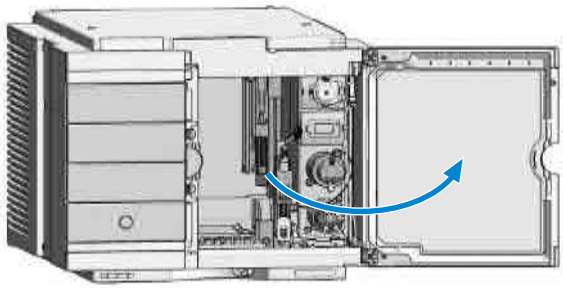

3 The needle assembly is still connected to the loop capillary. Use a 1/4 inch wrench to loosen the fitting of the loop capillary connected to the analytical head.

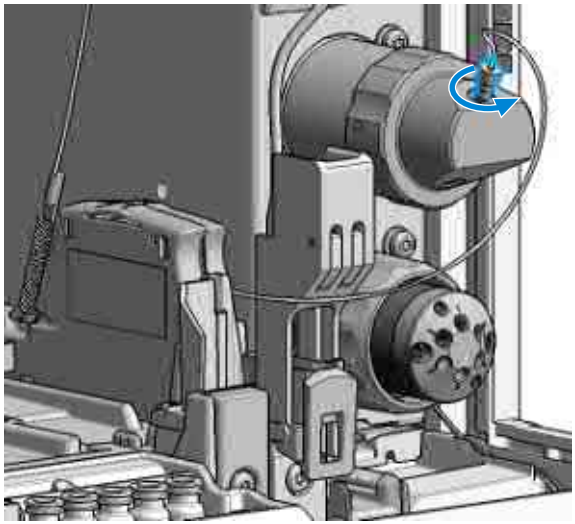

4 Lock the needle in the safety position.

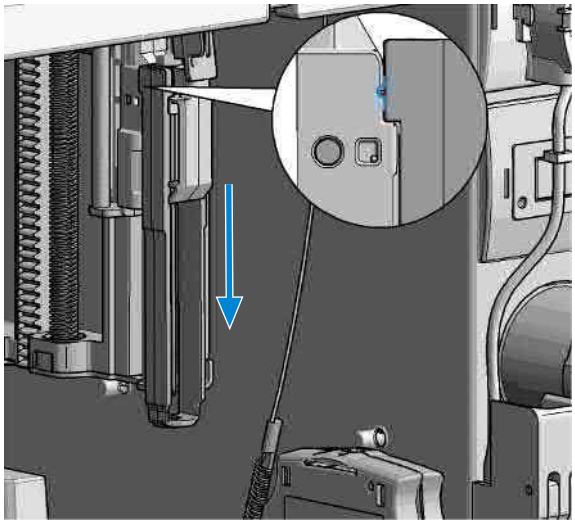

**NOTE** During normal operation of the Multisampler the needle assembly has to be unlocked.

**CAUTION**

Damage of the loop

The loop shape may be damaged if the loop is stretched or bent too far.

- Avoid to change the loop shape.
- Do not pull or bend the loop too far.

**WARNING**

**Sharp needle**

**Uncovered needles may cause injuries**

- **Make sure the needle is in the safety lock position.**

5 Remove the needle assembly by slightly pulling the needle cartridge.

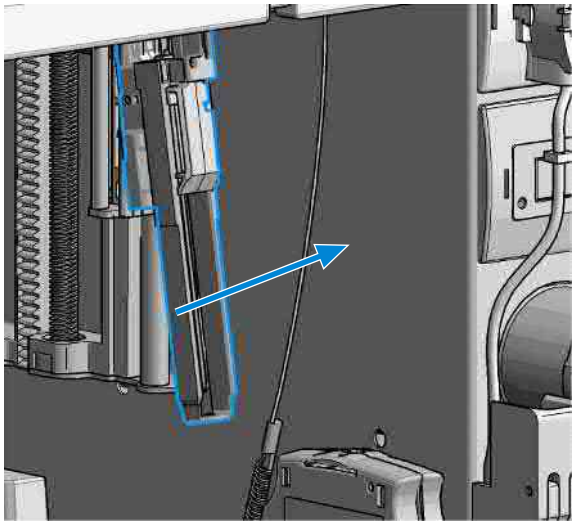

6 Remove the cartridge out of its proper position. By gently tilting and pulling it out of the work space of the multisampler.

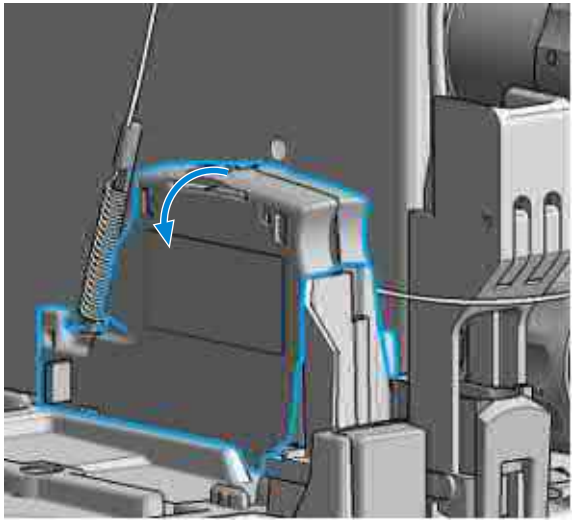

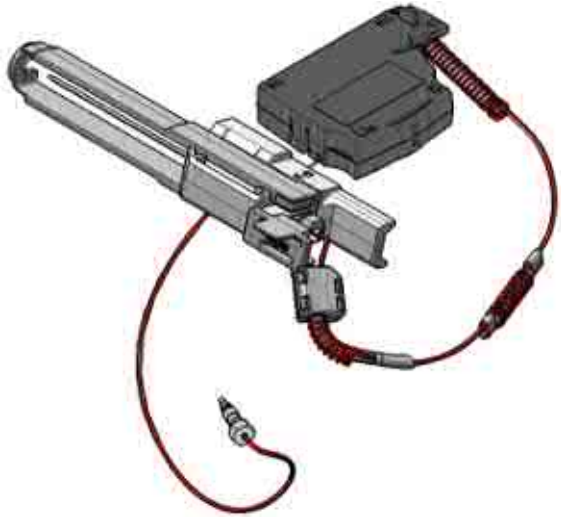

7 Remove the loop plastic adapter.

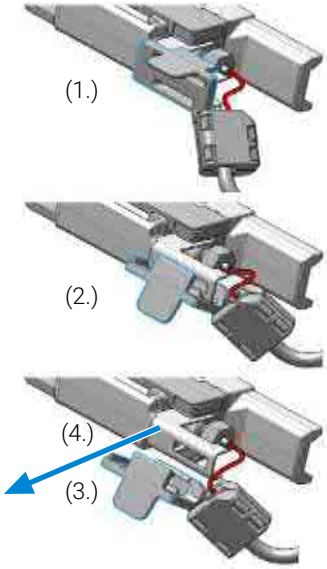


**NOTE** Do not open the rear plastic clamp.

**NOTE** If the plastic adapter is damaged the sample loop has to be replaced.

8 Use a 1/4 inch wrench to loosen the fitting of the loop capillary.

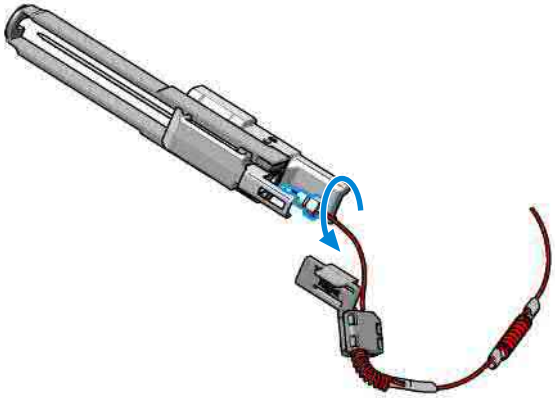

9 Remove the needle assembly.

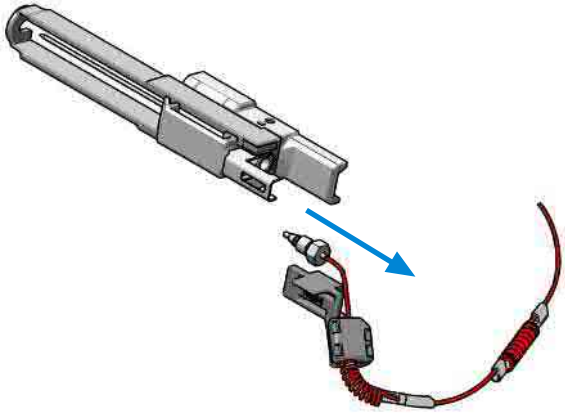

# Installing the Sample Loop-Flex

**When**

- If the sample loop flex is defective, blocked, or damaged.

**Tools required**

| Qty. | p/n | Description |
|---|---|---|
| 1 | 8710-0510 | Open-end wrench 1/4-5/16 inch |

**Parts required**

| Qty. | p/n | Description |
|---|---|---|
| 1 | G4767-60500 | Calibrated Sample Loop, 100 µL, right (blue coded) |

**Preparations**

- Finish any pending acquisition job.
- Return any plate on the workspace back to the hotel.

**WARNING**

**Risk of injury by uncovered needle**

**An uncovered needle is a risk of harm to the operator.**

- **Do not open the safety lock of the needle assembly**
- **Be careful working at the z-robot.**
- **Wear safety goggles, when removing the needle assembly.**

**CAUTION**

Mismatching sample loop configuration

Damage to the system

- Make sure, that the sample loop configuration matches to the hardware installed.

**NOTE**

If you have changed the sample loop, verify that the correct sample loop is configured in the CDS (see Setting Up the Autosampler With OpenLab ChemStation on page 91).

1 Install the loop capillary on top of the needle cartridge (1.) and tighten the fitting hand tight (2.).

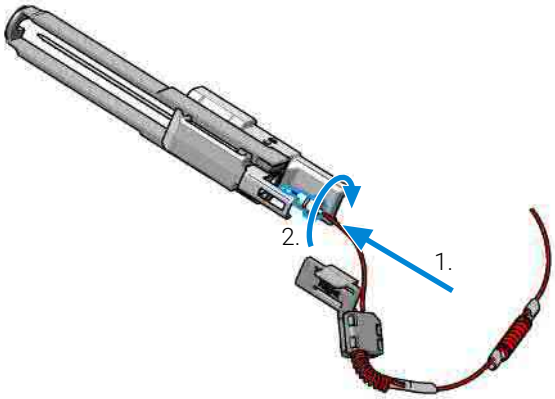


**NOTE** If the sample loop is changed, we recommend changing the needle as well.

**CAUTION** Blockages inside of the needle assembly union

— Do not overtighten the fitting. A quarter turn should be sufficient.

2 Use a 1/4 inch wrench to tighten the fitting of the loop capillary.

**3** Install loop plastic adapter.

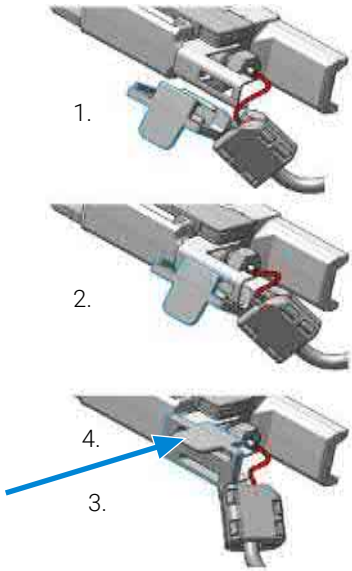


**NOTE** Verify the sample loop info on the plastic adapter. A left or a right sample loop must be installed in the correct slot of the needle parkstation. For single needle, the default position is on the right.

**NOTE** If the plastic adapter is damaged the sample loop has to be replaced.

4 Click the sample loop cartridge in the designated location and keep the right orientation.

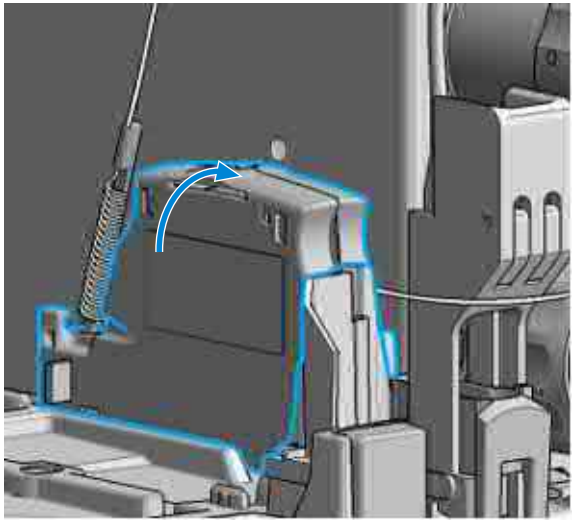

5 Install the shorter capillary of the sample loop cartridge to the analytical head.

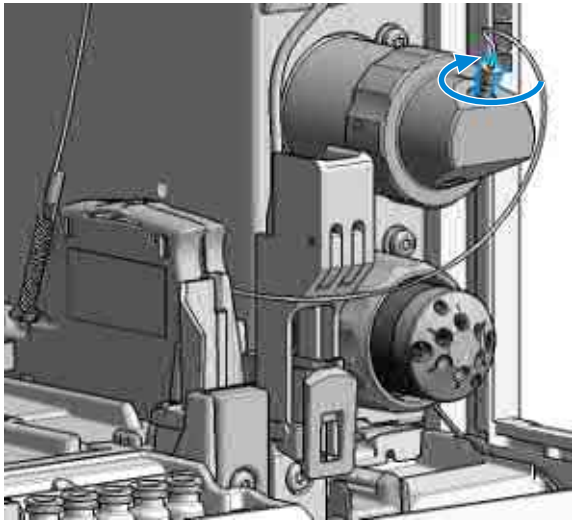

6 Pinch and reinsert the needle assembly and the connected sample loop capillary into the z- arm coupler.

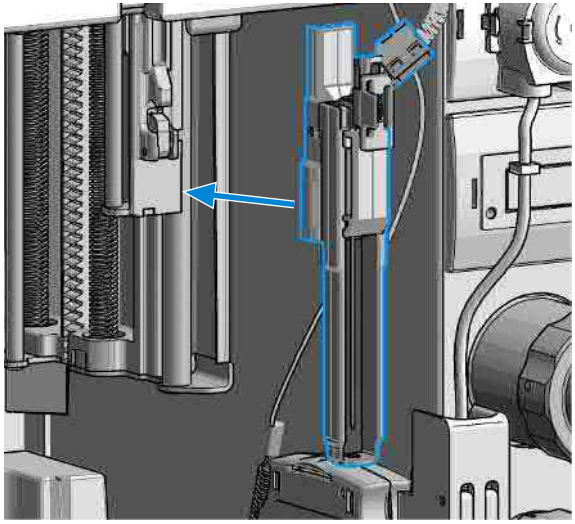

NOTE

Check the tension of the loop capillary. This must be forced and guided to the hydraulic box to prevent it from being caught by the Z-drive.

7 Close the front door.

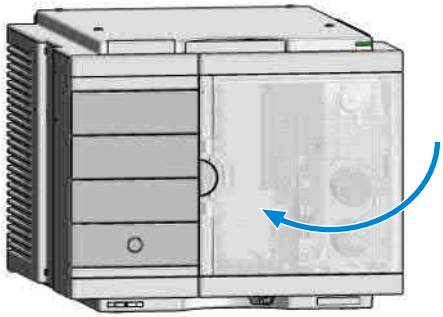

8 In the Local Controller close **Change needle /seat**.

**OR**

In Agilent Lab Advisor software **Change needle/loop**. Click **NEXT** and wait until the needle is in the needle park station.

Click **Back** to leave the Maintenance window.

**NOTE** If you need an autoreferencing step included, you must choose the change needle procedure.

**NOTE** If you have changed the sample loop, verify that the correct sample loop is configured in the CDS (see Setting Up the Autosampler With OpenLab ChemStation on page 91).

# Replace the Dummy Drawer

## Optional Configurations

**Table 18:** Overview on optional configurations (examples for uniform types)

| | | 1H | 2H | 3H | Dummy-Drawer |
|---|---|---|---|---|---|
| 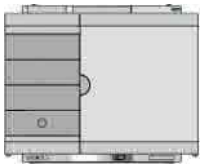 | **Delivery Status** | - | G7167-60020<br>1x | - | G4267-60024<br>3x |
| | **Up to 8 single height drawers**<br>16 positions Shallow wellplates and MTP<br>Max Sample capacity 1536 / 6144 samples (96 Shallow Wellplates / 384 MTP) | G7167-60021<br>8x | - | - | - |
| | **Up to 4 Dual Height drawers**<br>8 positions Vials (2 mL), deep well plates, MTP, Eppendorf<br>Max Sample capacity 432 / 3072 samples (2 mL Vials/ 384 MTP) | - | G7167-60020<br>4x | - | - |
| | **Up to 2 Drawers Triple Height**<br>4 positions (2H or 2*1H option left over) Vials (6 ml), deep well plates, MTP, Eppendorf<br>Max Sample capacity 60 / 216/ 1536 samples (6 mL Vials/ 2 mL Vials/ 384 MTP) | - | G7167-60020<br>1x | G7167-60022<br>2x | - |

**NOTE**

Mixed configurations are possible (for example 1x3H- with 1x2H- and 3x1H-drawer).
All positions in the Sample Hotel must be filled either with dummies or drawers.
The drawers must be installed from bottom to top.

## Installing and Replacing of Drawers (Upgrade Drawer Kit)

**Tools required**

| Qty. | p/n | Description |
|---|---|---|
| 1 | | Screwdriver |

**Parts required**

| Qty. | p/n | Description |
|---|---|---|
| 1 | G7167-60020 | Drawer 2H |
| 1 | G7167-60021 | Drawer 1H |
| 1 | G7167-60022 | Drawer 3H |

**NOTE** Before you start the new drawer installation you have to remove the lower drawer (2H drawer = default configuration) from the Sample Hotel.

**NOTE** For best cooling performance the 2H drawer must be installed in the lowest position.

**NOTE** More detailed video information is available on the Agilent Information Center.

1 Open the drawer.

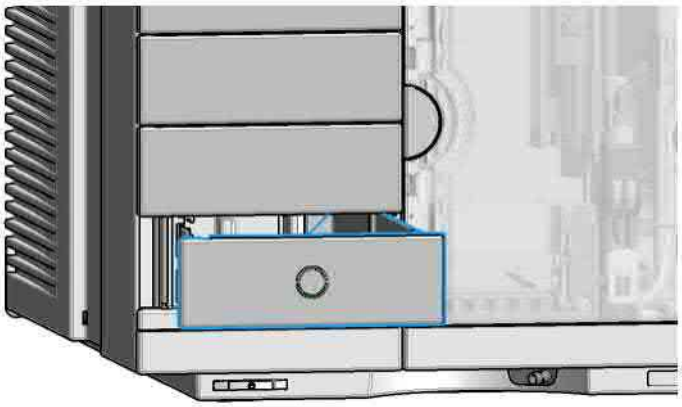

2 Pull the drawer completely out.

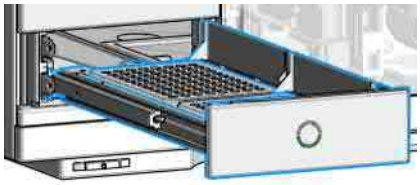

3 Unlatch the drawer: Use a screwdriver to press the clamping lever lightly to the left.

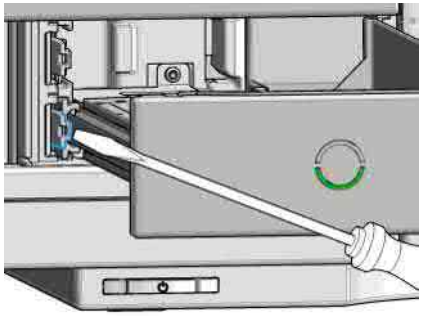

4 Remove the drawer from the rail guide.

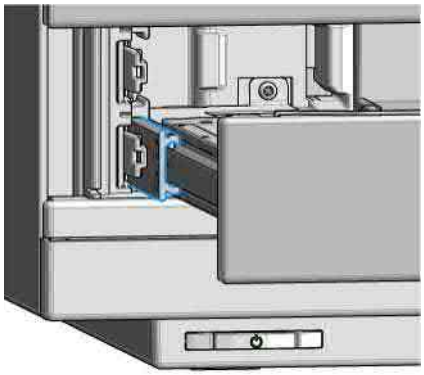

The drawer is now out of the hotel.

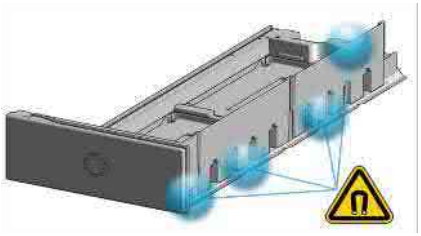

5 Grab in the recession below the dummy drawer front panel (1.) and lift the left side (2.).

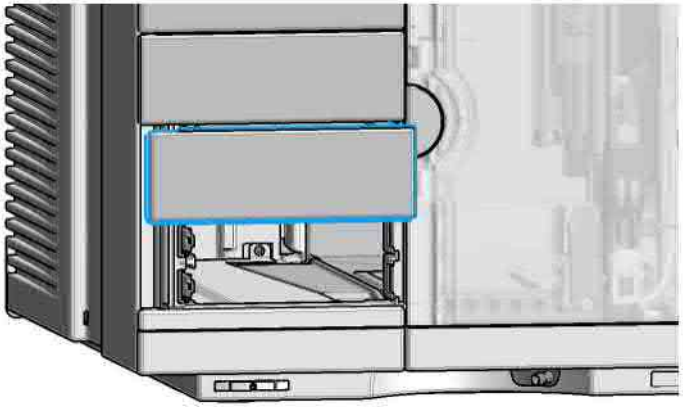

6 Remove the dummy drawer.

NOTE

At this stage, remove all other dummies that will be replaced by hotel drawers.

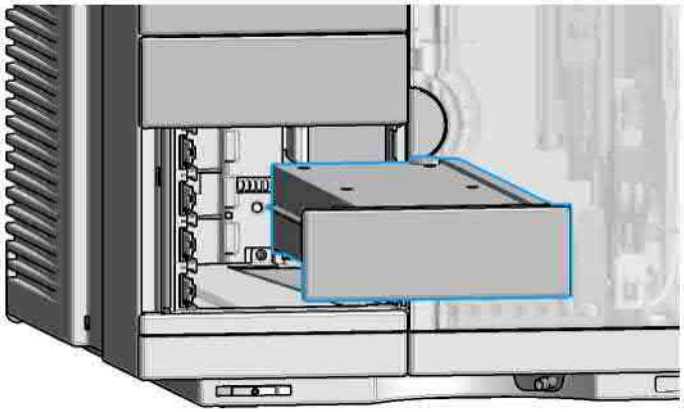

7 Place the new drawer horizontally into the sample hotel. Check that the drawer matches the middle bracket of the sample hotel.

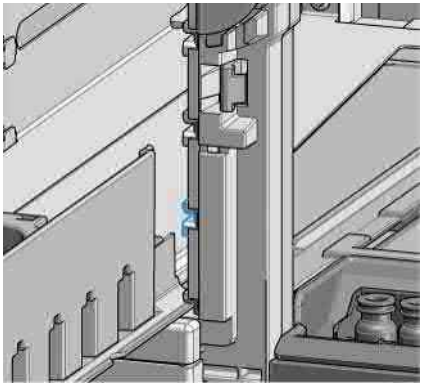

8 Push until the complete drawer locks in place.

NOTE

Take care that the clamping lever locks.

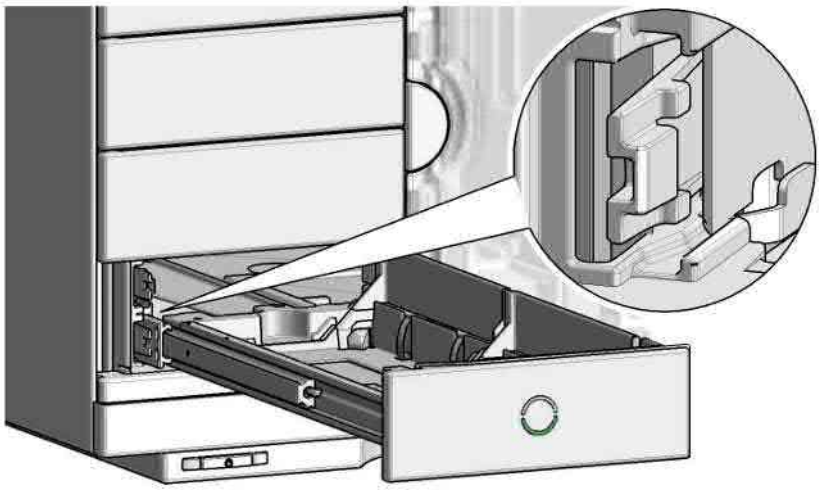

NOTE

Always fill sample hotel completely (no empty drawer slots). Otherwise the drawers can't be configured in the software.

9 Configure the hotel drawers in the controller software (see the Online Help of the software for details).

## Configuration of the Hotel Drawers

The configuration of your drawers is necessary to detect the new drawer configuration for your CDS system. When a wrong configuration is detected there will be a mismatch in your CDS system and you are not able to use the new drawers. The new drawer configuration is active and stored after you have done the Drawer Configuration.

## Configure the Hotel Drawers in the Control Software

**Software required**

- M8500AALC driver (A.02.10 or above)
- OpenLab CDS (A.02.01 or above)

**Preparations**

- Stop the acquisition run.
- Remove the sample containers (trays and well plates) from workspace.
- Complete the drawer installation.
- Remove the sample containers (trays and well plates) from the drawers.
- Verify that all sample trays (palettes) are installed in their drawers.
- All open drawers and dummies have to be closed and installed properly.

1 Start the Agilent chromatography data system.

2 Right-click on the **Sampler** GUI (example shows a Multisampler).

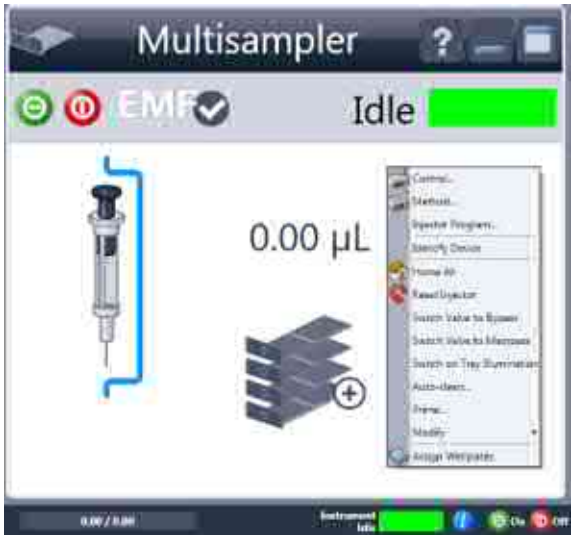

3 Select **Modify** > **Drawer Configuration** in the GUI screen.

**NOTE**

For correct detection, it is necessary to remove all sample containers (for example 54 vial tray or well plates).

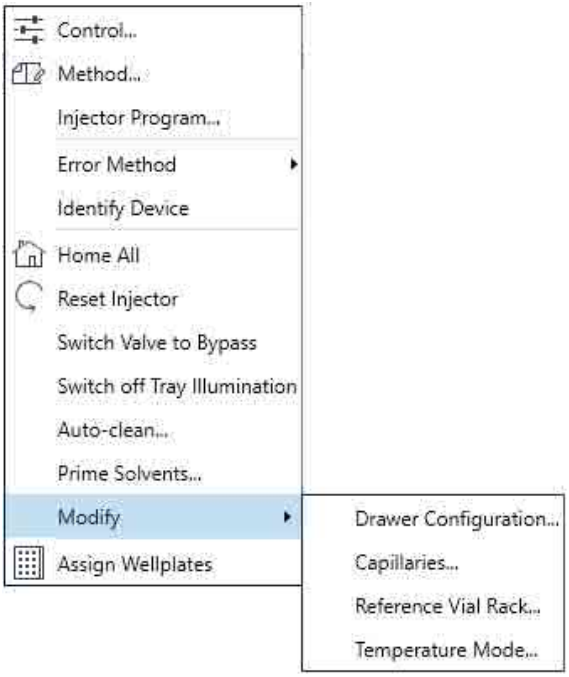


4 Follow the Setup or Change configuration screen.

5 System is ready after the robot has done Auto Referencing (see Auto Referencing on page 134).

## Configure the Hotel Drawers in Lab Advisor

**Software required**

- Agilent Lab Advisor software (B.02.05 or above)

**Preparations**

- Stop the acquisition run.
- Remove the sample containers (trays and well plates) from workspace.
- Complete the drawer installation.
- Remove the sample containers (trays and well plates) from the drawers.
- Verify that all sample trays (palettes) are installed in their drawers.
- All open drawers and dummies have to be closed and installed properly.

1 Start the Lab Advisor Software.

2 Connect the instrument and select **Instrument Control** in the system screen.

3 Switch In the **Configuration** menu of the Multisampler. Select **Detect Drawers** in the **Hotel Configuration**.

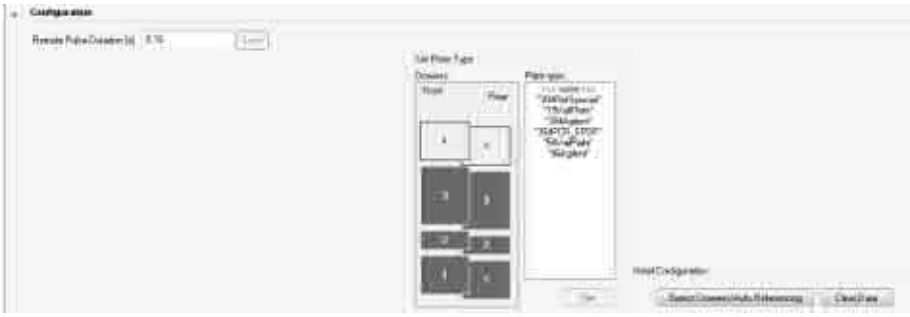

4 Follow the Detect Hotel Configuration screen to detect the physically available drawers.

**NOTE**

For correct detection, it is necessary to remove all sample containers (for example 54 vial tray or well plates).

5 System is ready after the robot has done Auto Referencing (see Auto Referencing on page 134).

# Replace the Module Firmware

**When**

Install a newer firmware

- It fixes known problems of older versions, or
- It introduces new features, or
- It ensures keeping all systems at the same (validated) revision

**When**

Install an older firmware

- It ensures keeping all systems at the same (validated) revision, or
- It ensures compatibility after adding a new module to the system, or
- A third-party control software requires a special version

**Software required**

- Agilent Lab Advisor software

**Tools required**

| Qty. | p/n | Description |
|---|---|---|
| 1 | | Firmware, tools and documentation from Agilent web site |

**Preparations**

- Read update documentation provided with the Firmware Update Tool.

To upgrade/downgrade the module's firmware carry out the following steps:

1. Download the required module firmware, the latest FW Update Tool and the documentation from the Agilent web.
   https://www.agilent.com/en-us/firmwareDownload?whid=69761
2. For loading the firmware into the module follow the instructions in the documentation.

## Module Specific Information

There is no specific information for this module.

# Replace the Sample Thermostat

**When**

- The Sample Thermostat is damaged or defective.

**Tools required**

| Qty. | p/n | Description |
|---|---|---|
| 1 | 5182-3466 | Torx screwdriver T10<br>(for the Sample Thermostat)<br>**OR** |
| 1 | 5023-3089 | Torx key set<br>(part of the G7120-68708 InfinityLab LC Series Tool Kit) |

**Parts required**

| Qty. | p/n | Description |
|---|---|---|
| 1 | G7167-60201 | Sample Thermostat |

**Preparations**

- If needed, update the firmware of the hosting sampler to ensure that it supports the type of thermostat you are about to install, see Specifications of the Sample Thermostat on page 32.

**WARNING** **Flammable refrigerant**

**Formation of flammable gas-air mixtures inside the Sample Thermostat and laboratory.**

- **Keep open fire or sources of ignition away from the device.**
- **Ensure a room size of 4 $m^3$ (1 $m^3$ for every 8 g of R600a refrigerant inside of the Sample Thermostat).**
- **Ensure adequate ventilation: typical air exchange of 25 $m^3/h$ per $m^2$ of laboratory floor area.**
- **Keep all ventilation openings in the enclosure clear of obstructions. Do not block the openings on the circumference of the Sample Thermostat.**

**WARNING** **Flammable refrigerant used**

- **When handling, installing and operating the Sample Thermostat, care should be taken to avoid damage to the refrigerant tubing or any part of the Sample Thermostat.**

**WARNING**

**In the event of a damage**

- **Keep open fire or sources of ignition away from the device.**
- **Ventilate the room for several minutes.**
- **Do not use the Sample Thermostat any more.**

**WARNING**

**Heavy weight**

**The module is heavy.**

- **Carry the module at least with 2 people.**
- **Avoid back strain or injury by following all precautions for lifting heavy objects.**
- **Ensure that the load is as close to your body as possible.**
- **Ensure that you can cope with the weight of your load.**

**CAUTION**

Routing of the condensation tubing

Proper routing of the condensation tubing is critical for correct condensate drainage.

- Do not place the sampler directly on the bench.

**CAUTION**

Condensate inside the module

Damage to the electronics of the module

- After installation of the Sample Thermostat, wait at least 30 min before switching on the module.
- Make sure there is no condensate inside the module.

1 Ensure that the power switch on the front of the module is OFF (switch stands out).

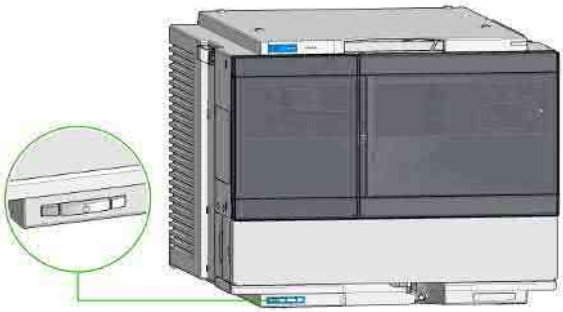

2 Disconnect the power cable from the sampler.

3 Ensure that no condensate remains inside the thermostat before proceeding forward.

**NOTE** Gently tapping on the sides of the sampler can help to remove the last traces of condensate from the system.

4 Loosen the screw (1) and remove the condensate funnel (2) from the back of the thermostat.

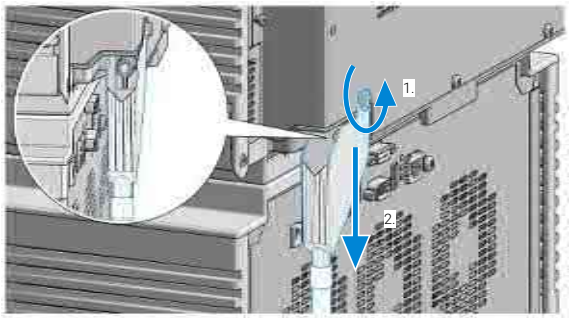


**NOTE**

If there is still some condensate inside the thermostat, place a suitable container underneath the outlet tube, and keep tapping on the sides of the sampler until no more water comes out.

5 Remove the fixation screws on the back of Sample Thermostat.

6 Pull the thermostat halfway out, disconnect the power and the data cable and then remove the unit completely from the sampler.

7 Slide the new thermostat halfway into the sampler and connect the power and the data cable.

**CAUTION**

Damage to the cables

- Do not bend or pinch the cables.
- Make sure that the Sample Thermostat fits perfectly in the sampler.

8 Slide the Sample Thermostat all the way into the sampler.

9 Fix the unit with the four screws.

**10** Position the condensate collector funnel underneath the condensate drainage outlet tube (1) and fix it to the back of the thermostat by tightening the screw (2). Ensure correct orientation and avoid overtightening the screw.

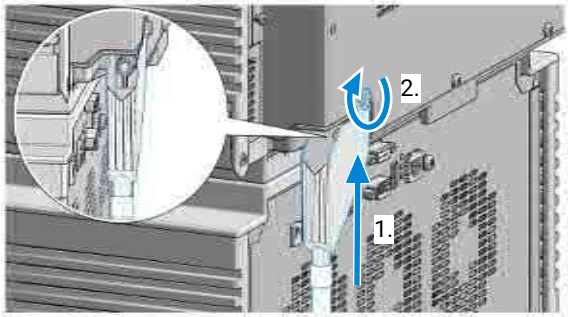


**NOTE**

For information on proper condensate handling, see Install the Sample Thermostat on page 36.

**11** Connect the power cable to the power connector at the rear of the module.

**CAUTION**

Damage to the Sample Thermostat

- Wait at least 30 min before switching on the compressor of the thermostat.
- This allows the refrigerant and system lubrication to reach equilibrium.

**12** Switch on the sampler and perform the **Sample Cooler Function Test** to verify the correct functioning of the new thermostat, see Sample Cooler Function Test on page 142.

# 9 Parts and Materials for Maintenance

This chapter provides information on parts material required for the module.

Standard Parts 288

Hotel Drawer 289

Analytical Head Assembly 100 µL 290

Flush Head Assembly 500 µL 291

Injection Valve with Actuator 293

3-Position/6-Port FI Valve 294

Needle Port Assembly 295

Door Assy Infinity III 296

Door Assy 297

Sample Thermostat Upgrade Kit 298

Bottles 299

Leak System Parts 300

SFC Multisampler Accessory Kit 301

Tubing Kit Sampler Standard 303

# Standard Parts

| p/n | Description |
|---|---|
| G4267-87201 | Needle Assembly |
| G4267-87012 | High Pressure Needle Seat, 0.12 mm (PEEK) |
| 5068-0279 | Rotor Seal, 3-position/6-port FI Valve |
| 5068-0280 | Stator |
| G4767-60500 | Calibrated Sample Loop, 100 µL, right (blue coded) |
| G4267-40033 | Transport Protection |

# Hotel Drawer

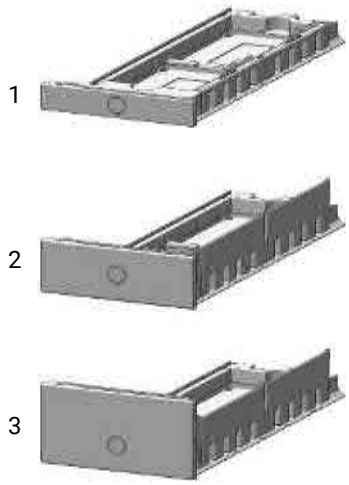


**Figure 31:** Hotel drawer

| # | p/n | Description |
|---|---|---|
| 1 | G7167-60021 | Drawer 1H<br>(including 2*G4267-60206 Sample Tray (Palette)) |
| 2 | G7167-60020 | Drawer 2H<br>(including 2*G4267-60205 Sample Tray (Palette)) |
| 3 | G7167-60022 | Drawer 3H<br>(including 2*G4267-60205 Sample Tray (Palette)) |
| | G4267-60024 | Dummy Drawer<br>(not shown) |

# Analytical Head Assembly 100 µL

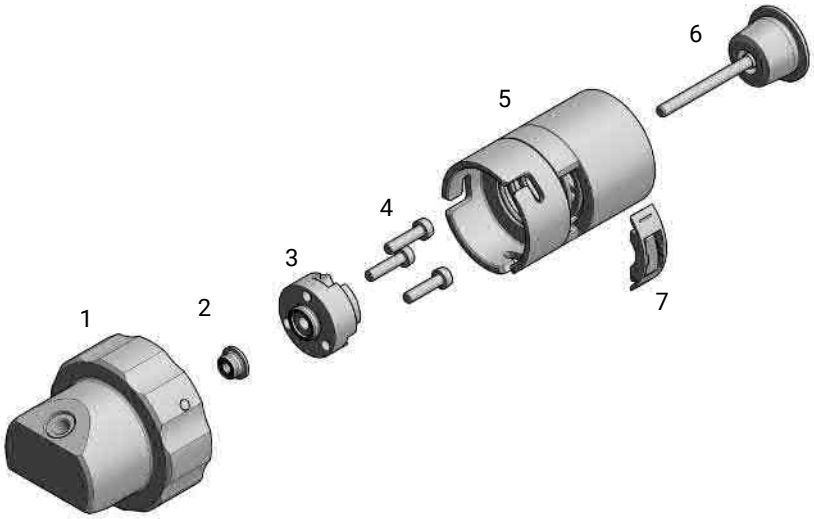


**Figure 32:** Analytical head assembly, 100 µL

| # | Qty. | p/n | Description |
|---|---|---|---|
| | 1 | G4267-60043 | Analytical Head, 100 µL |
| 1 | 1 | G4267-60433 | Head Assembly, 100 µL |
| 2 | 1 | 0905-1719 | Metering Seal, 100 µL |
| 3 | 1 | G4267-60434 | Seal Support Assembly, 100 µL |
| 4 | 1 | 0515-1052 | Screw M3 x 12 mm hex |
| 5 | 1 | G4267-60432 | Spring Adapter Assembly |
| 6 | 1 | 5067-5678 | Piston, 100 µL, Zirconium oxide |
| 7 | 1 | G4267-40430 | RFID Clamp<br>(not including the RFID Tag) |
| | 1 | 5043-1000 | O-Ring<br>(not shown) |
| | 1 | 5500-1159 | Capillary ST 0.17 mm x 100 mm SX/S-2.3<br>(not shown) |

# Flush Head Assembly 500 µL

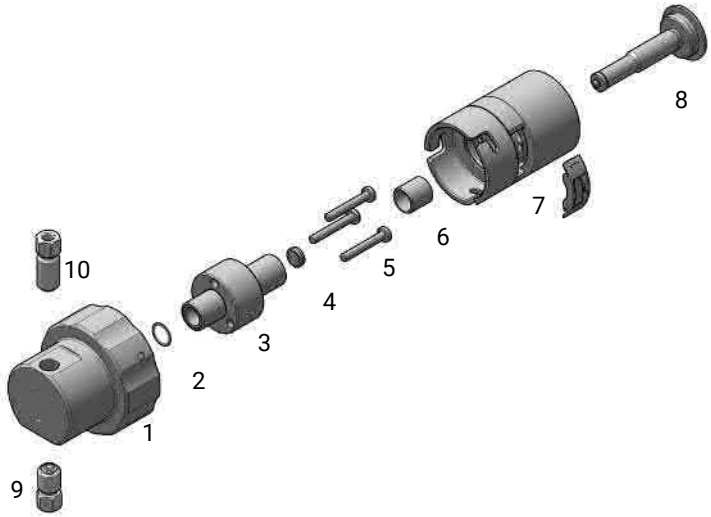


**Figure 33:** Flush head assembly, 500 µL

| # | | p/n | Description |
|---|---|---|---|
| | | G4267-60049 | Flush head, 500 µL |
| 1 | | G4267-60491 | Flush Head Assembly, 500 µL |
| 2 | | 5023-2473 | Sealing Plate 500 µL |
| 3 | | G4267-60482 | Cylinder Assembly, 500 µL |
| 4 | | 5067-5918 | Flush Head Seal 500 µL |
| 5 | | 0515-5167 | Screw |
| 6 | | 1410-1881 | Bearing-Sleeve 8 mm-ID 10 mm-OD 10 mm-LG Pl |
| 7 | | G4267-60432 | Spring Adapter Assembly |
| 8 | | 5067-5919 | Piston Assembly 500 µL |
| 9 | | G4267-60451 | Pump Valve IN |
| 10 | | G4267-60452 | Pump Valve Out |

| # | p/n | Description |
|---|---|---|
| | 5043-1000 | O-Ring<br>(not shown) |
| | 5500-1167 | Capillary ST 0.17 mm x 250 mm SL-SL<br>Capillary from the flush head to the injection valve (not shown) |

# Injection Valve with Actuator

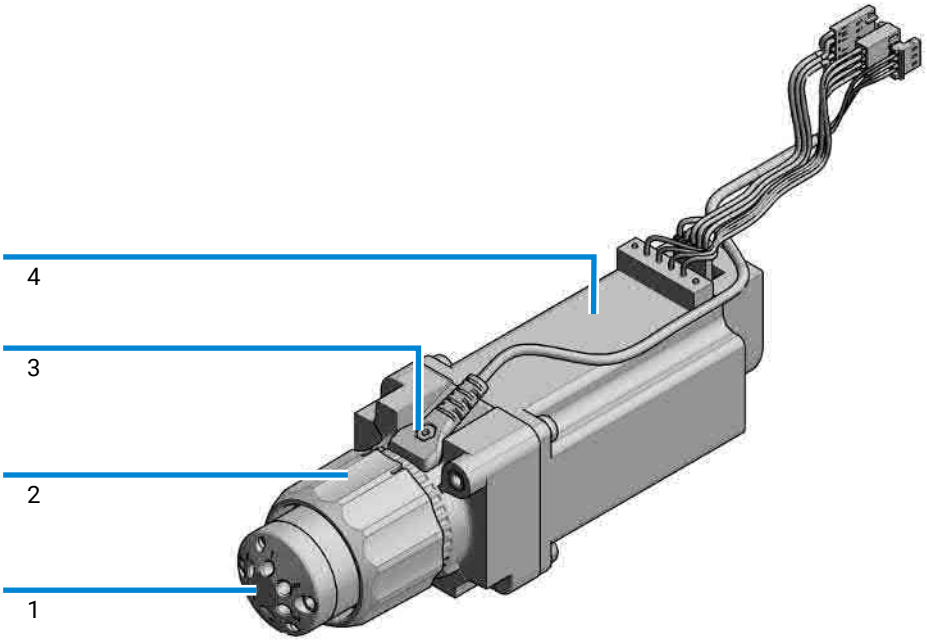


**Figure 34:** Injection valve with actuator

| # | Qty. | p/n | Description |
|---|---|---|---|
| 1 | 1 | 5067-6680 | 3-position/6-port FI valve 800 bar |
| 2 | 1 | 5043-0291 | Lock Nut |
| 3 | 1 | 5188-8030 | Tag Reader |
| 4 | 1 | 5067-4162 | Direct-Actuator-50 Assembly |

# 3-Position/6-Port FI Valve

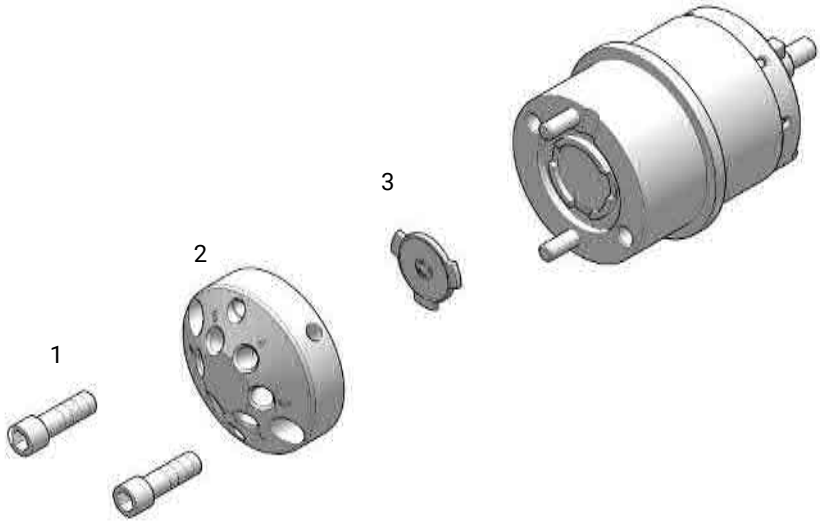


**Figure 35:** 3-Position/6-Port FI Valve Assembly

| # | Qty. | p/n | Description |
|---|---|---|---|
| | 1 | 5067-6680 | 3-position/6-port FI valve 800 bar |
| 1 | 1 | 5068-0210 | Stator screws |
| 2 | 1 | 5068-0280 | Stator |
| 3 | 1 | 5068-0279 | Rotor Seal, 3-position/6-port FI Valve |

# Needle Port Assembly

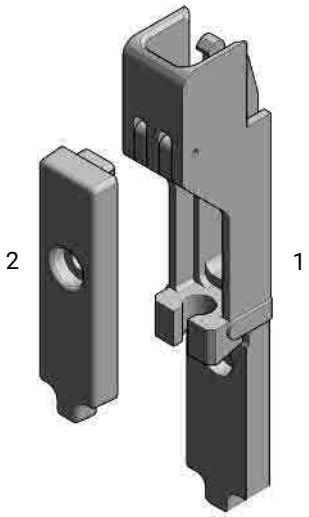


**Figure 36:** Needle port assembly

| # | | p/n | Description |
|---|---|---|---|
| 1 | | G4267-60044 | Needle Port Assembly Station |
| 2 | | G4267-40045 | Needle port Adapter |

# Door Assy Infinity III

5004-0056 (Door Kit Infinity III 320mm MS) :

| Qty. | p/n | Description |
|---|---|---|
| 1 | 5043-0885 | Insulation Window Infinity II 320 Right |
| 1 | 5360-0024 | Door Multisampler |
| 1 | 5431-0062 | Side Window Multisampler |

# Door Assy

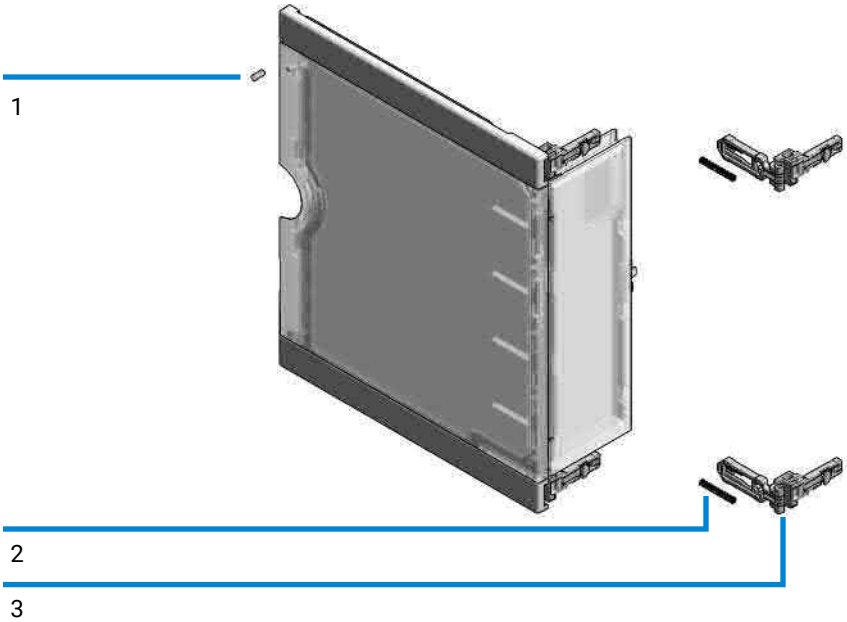


**Figure 37:** Door assy

| # | Qty. | p/n | Description |
|---|---|---|---|
| | 1 | 5067-5415 | Door Assy |
| 1 | 1 | 5021-1879 | Permanent Magnet |
| 2 | 1 | | Pressure Spring (not available) |
| 3 | 2 | 5431-0016 | Hinge Universal Latched |

# Sample Thermostat Upgrade Kit

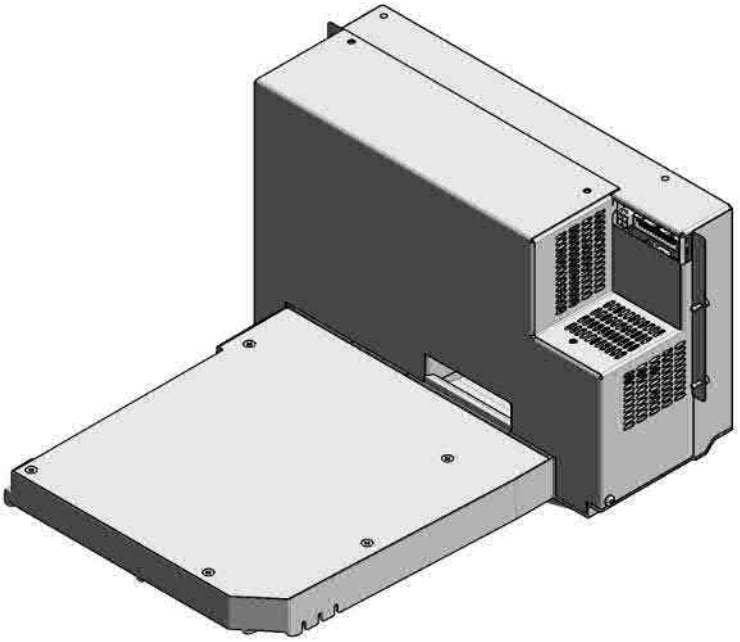

**Figure 38:** Sample Thermostat

| p/n | Description |
|---|---|
| G4761A | InfinityLab Sample Thermostat Upgrade Kit contains: |
| G7167-60201 | Sample Thermostat |
| 5067-6208 | Condensate Drainage Kit (not shown) |

**NOTE** The Sample Thermostat contains flammable refrigerant R600a. Please check further details for installation.

# Bottles

| p/n | Description |
|---|---|
| 9301-6524 | Solvent bottle, clear, 1000 mL |
| 9301-6528 | Solvent bottle, clear, 1000 mL with cap |
| 9301-6342 | Solvent bottle, clear 2 L |
| 9301-6526 | Solvent bottle, amber, 1000 mL |
| 9301-6341 | Solvent bottle, amber 2 L |

# Leak System Parts

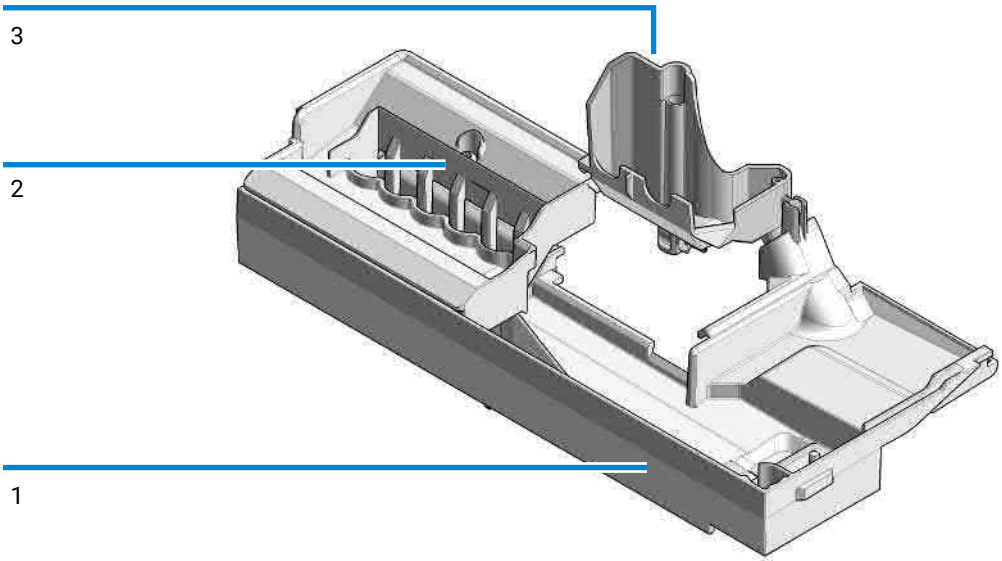


**Figure 39:** Drain management kit

| # | p/n | Description |
|---|---|---|
| | G4267-68708 | Drain Management Kit<br>contains: |
| 1 | | Leak Plane |
| 2 | | Ref Vial Holder (not orderable as one part) |
| 3 | | Wash Port Assembly (not orderable as one part) |
| | 5043-1357 | Seal silicone rubber<br>(Washport; not shown) |
| | G4267-60060 | Blind seat<br>(not shown) |
| | 5042-9974 | Leak tubing (1.5 m, 120 mm required)<br>(not shown) |

# SFC Multisampler Accessory Kit

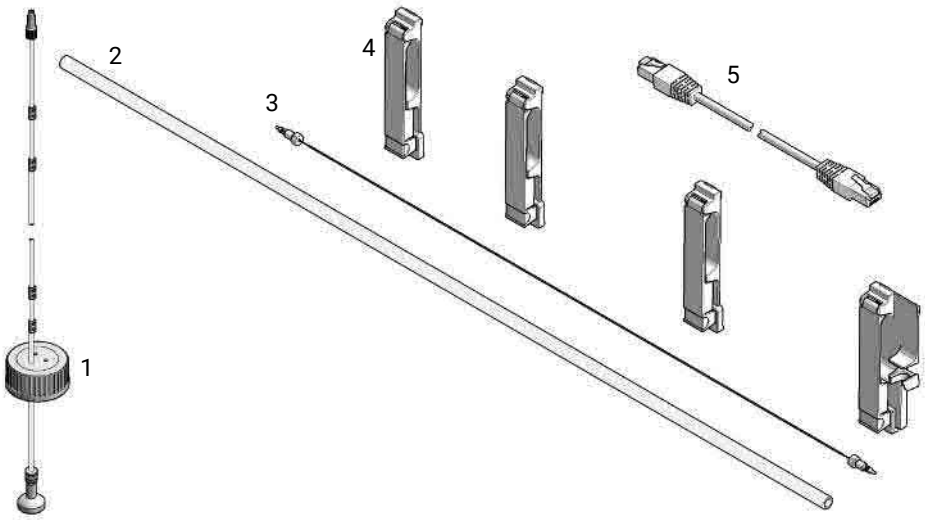


| # | Qty. | p/n | Description |
|---|---|---|---|
| | 1 | G7161-68755 | Accessory Kit<br>1260 Infinity II SFC Multisampler Accessory Kit |
| 1 | 1 | G4220-60007 | Bottle Head Assembly<br>(not included in the accessory kit) |
| 2 | 1 | 5063-6527 | Tubing, Silicon Rubber, 1.2 m, ID/OD 6 mm/9 mm |
| 3 | 1 | 5500-1157 | Capillary ST 0.12 mm x 500 mm SL/S<br>(1290 module)<br>OR |
| | 1 | 5500-1246 | Capillary ST 0.17 mm x 500 mm SI/SI<br>(1260 module) |
| 4 | 1 | 5043-1013 | Tubing Clip |
| 5 | 1 | 5181-1519 | CAN cable, Agilent module to module, 1 m |
| | 1 | 5067-5967 | Tubing Clip Tube Connector |

## Tools

| Qty. | p/n | Description |
|---|---|---|
| 1 | 0100-1710 | Mounting Tool for Tubing Connections |
| 1 | 5023-2533 | Mounting tool |

## 5067-6137 (Tubing Connector Leak Kit)

| p/n | Description |
|---|---|
| 5067-6137 | Tubing Connector Leak Kit |

**Figure 40:** Tubing connector Leak Kit

# Tubing Kit Sampler Standard

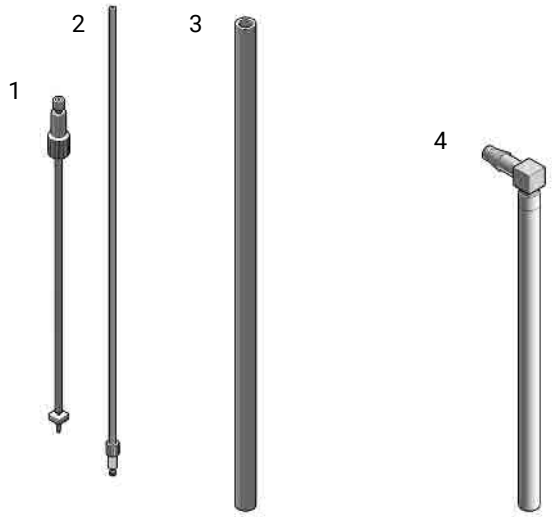


**Figure 41:** Tubing kit sampler standard

| # | p/n | Description |
|---|---|---|
| | G4267-60061 | Tubing-Kit-Sampler-Standard<br>contains: |
| 1 | | FEP Tubing OD 0.125 inch with Ferrule / Nut and connector for peristaltic pump |
| 2 | | FEP Tubing OD 0.0625 inch with Ferrule/Nut for washport |
| 3 | | Flex-Tubing |
| 4 | | Flex-Tubing with tube connector 90 ° |

Accessories not included in the kit, orderable separately:

| p/n | Description |
|---|---|
| 5042-9974 | Leak tubing (1.5 m, 120 mm required) |
| 0100-1846 | UNION-TEFZEL |
| 5067-5967 | Tubing Clip Tube Connector |

# 10 Identifying Cables

This chapter provides information on cables used with the modules.

Cable Overview 305

Analog Cables 307

Remote Cables 309

BCD Cables 313

CAN/LAN Cables 315

RS-232 Cables 316

USB 317

# Cable Overview

**NOTE** Never use cables other than the ones supplied by Agilent Technologies to ensure proper functionality and compliance with safety or EMC regulations.

## Analog cables

| p/n | Description |
|---|---|
| 35900-60750 | Agilent 35900A A/D converter |
| 01046-60105 | Analog cable (BNC to general purpose, spade lugs) |

## Remote cables

| p/n | Description |
|---|---|
| 5188-8029 | ERI<br>to general purpose |
| 5188-8044 | Remote Cable ERI – ERI |
| 5188-8045 | Remote Cable APG – ERI |
| 5188-8059 | ERI-Extension-Cable 1.2 m |
| 5061-3378 | Remote Cable<br>to 35900 A/D converter |
| 01046-60201 | Agilent module to general purpose |
| 5188-8057 | Fraction Collection ERI remote Y-cable |

## CAN cables

| p/n | Description |
|---|---|
| 5181-1516 | CAN cable, Agilent module to module, 0.5 m |
| 5181-1519 | CAN cable, Agilent module to module, 1 m |

## LAN cables

| p/n | Description |
|---|---|
| 5023-0203 | Cross-over network cable, shielded, 3 m<br>(for point to point connection) |
| 5023-0202 | Twisted pair network cable, shielded, 7 m<br>(for point to point connection) |

## RS-232 cables

| p/n | Description |
|---|---|
| RS232-61601 | RS-232 cable, 2.5 m<br>Instrument to PC, 9-to-9 pin (female). This cable has special pin-out, and is not compatible with connecting printers and plotters. It is also called "Null Modem Cable" with full handshaking where the wiring is made between pins 1-1, 2-3, 3-2, 4-6, 5-5, 6-4, 7-8, 8-7, 9-9. |
| 5181-1561 | RS-232 cable, 8 m |

## USB cables

| p/n | Description |
|---|---|
| 5188-8050 | USB A M-USB Mini B 3 m (PC-Module) |
| 5188-8049 | USB A F-USB Mini B M OTG (Module to Flash Drive) |

# Analog Cables

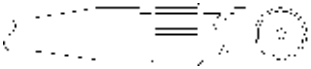

One end of these cables provides a BNC connector to be connected to Agilent modules. The other end depends on the instrument to which connection is being made.

## Agilent Module to 35900 A/D converters

| p/n 35900-60750 | 35900 | Pin Agilent module | Signal Name |
|---|---|---|---|
| | 1 | | Not connected |
| | 2 | Shield | Analog - |
| | 3 | Center | Analog + |

## Agilent Module to BNC Connector

| p/n 8120-1840 | Pin BNC | Pin Agilent module | Signal Name |
|---|---|---|---|
| 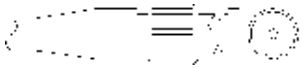 | Shield | Shield | Analog - |
| | Center | Center | Analog + |

## Agilent Module to General Purpose

| p/n 01046-60105 | Pin | Pin Agilent module | Signal Name |
|---|---|---|---|
| 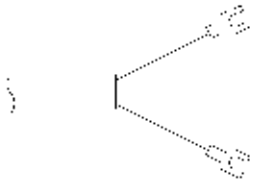 | 1 | | Not connected |
| | 2 | Black | Analog - |
| | 3 | Red | Analog + |

# Remote Cables

## ERI (Enhanced Remote Interface)

- 5188-8029 ERI to general purpose (D-Sub 15 pin male - open end)
- 5188-8044 ERI to ERI (D_Sub 15 pin male - male)
- 5188-8059 ERI-Extension-Cable 1.2 m (D-Sub15 pin male / female)

| p/n 5188-8029 | pin | Color code | Enhanced Remote | Classic Remote | Active (TTL) |
|---|---|---|---|---|---|
| 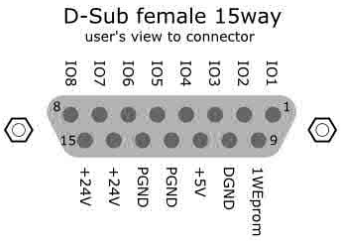 | 1 | white | IO1 | START REQUEST | Low |
| | 2 | brown | IO2 | STOP | Low |
| | 3 | green | IO3 | READY | High |
| | 4 | yellow | IO4 | PEAK DETECT | Low |
| | 5 | grey | IO5 | POWER ON | High |
| | 6 | pink | IO6 | SHUT DOWN | Low |
| | 7 | blue | IO7 | START | Low |
| | 8 | red | IO8 | PREPARE | Low |
| | 9 | black | 1wire DATA | | |
| | 10 | violet | DGND | | |
| | 11 | grey-pink | +5V ERI out | | |
| | 12 | red-blue | PGND | | |
| | 13 | white-green | PGND | | |
| | 14 | brown-green | +24V ERI out | | |
| | 15 | white-yellow | +24V ERI out | | |
| | NC | yellow-brown | | | |

**NOTE** Configuration is different with old firmware revisions.
The configuration for IO4 and IO5 is swapped for modules with firmware lower than D.07.10.

**NOTE** Peak Detection is used for LCMS systems connected with the Fraction Collection Remote Y-Cable (5188-8057).

- 5188-8045 ERI to APG (Connector D_Subminiature 15 pin (ERI), Connector D_Subminiature 9 pin (APG))

| p/n 5188-8045 | Pin (ERI) | Signal | Pin (APG) | Active (TTL) |
|---|---|---|---|---|
| | 10 | GND | 1 | |
| | 1 | Start Request | 9 | Low |
| | 2 | Stop | 8 | Low |
| | 3 | Ready | 7 | High |
| | 5 | Power on | 6 | High |
| | 4 | Future | 5 | |
| | 6 | Shut Down | 4 | Low |
| | 7 | Start | 3 | Low |
| | 8 | Prepare | 2 | Low |
| | Ground | Cable Shielding | NC | |

- 5188-8057 ERI to APG and RJ45 (Connector D_Subminiature 15 pin (ERI), Connector D_Subminiature 9 pin (APG), Connector plug Cat5e (RJ45))

**Table 19:** 5188-8057 ERI to APG and RJ45

| p/n 5188-8057 | Pin (ERI) | Signal | Pin (APG) | Active (TTL) | Pin (RJ45) |
|---|---|---|---|---|---|
| 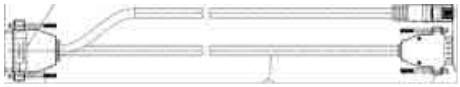 | | | | | |
| | 10 | GND | 1 | | 5 |
| | 1 | Start Request | 9 | High | |
| | 2 | Stop | 8 | High | |
| | 3 | Ready | 7 | High | |
| | 4 | Fraction Trigger | 5 | High | 4 |
| | 5 | Power on | 6 | High | |
| | 6 | Shut Down | 4 | High | |
| | 7 | Start | 3 | High | |
| | 8 | Prepare | 2 | High | |
| | Ground | Cable Shielding | NC | | |

One end of these cables provides an Agilent Technologies APG (Analytical Products Group) remote connector to be connected to Agilent modules. The other end depends on the instrument to be connected to.

## Agilent Module to Agilent 35900 A/D Converters

| p/n 5061-3378 | Pin 35900 A/D | Pin Agilent module | Signal Name | Active (TTL) |
|---|---|---|---|---|
| | 1 - White | 1 - White | Digital ground | |
| | 2 - Brown | 2 - Brown | Prepare run | Low |
| | 3 - Gray | 3 - Gray | Start | Low |
| | 4 - Blue | 4 - Blue | Shut down | Low |
| | 5 - Pink | 5 - Pink | Not connected | |
| | 6 - Yellow | 6 - Yellow | Power on | High |
| | 7 - Red | 7 - Red | Ready | High |
| | 8 - Green | 8 - Green | Stop | Low |
| | 9 - Black | 9 - Black | Start request | Low |

## Agilent Module to General Purpose

| p/n 01046-60201 | Wire Color | Pin Agilent module | Signal Name | Active (TTL) |
|---|---|---|---|---|
| 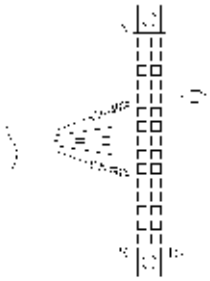 | White | 1 | Digital ground | |
| | Brown | 2 | Prepare run | Low |
| | Gray | 3 | Start | Low |
| | Blue | 4 | Shut down | Low |
| | Pink | 5 | Not connected | |
| | Yellow | 6 | Power on | High |
| | Red | 7 | Ready | High |
| | Green | 8 | Stop | Low |
| | Black | 9 | Start request | Low |

# BCD Cables

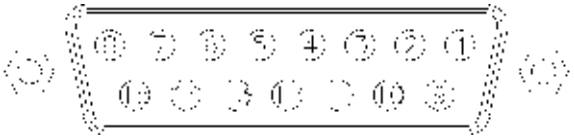

One end of these cables provides a 15-pin BCD connector to be connected to the Agilent modules. The other end depends on the instrument to be connected to

## Agilent Module to General Purpose

| p/n G1351-81600 | Wire Color | Pin Agilent module | Signal Name | BCD Digit |
|---|---|---|---|---|
| 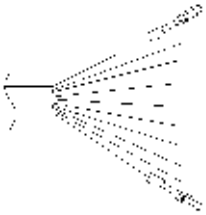 | Green | 1 | BCD 5 | 20 |
| | Violet | 2 | BCD 7 | 80 |
| | Blue | 3 | BCD 6 | 40 |
| | Yellow | 4 | BCD 4 | 10 |
| | Black | 5 | BCD 0 | 1 |
| | Orange | 6 | BCD 3 | 8 |
| | Red | 7 | BCD 2 | 4 |
| | Brown | 8 | BCD 1 | 2 |
| | Gray | 9 | Digital ground | Gray |
| | Gray/pink | 10 | BCD 11 | 800 |
| | Red/blue | 11 | BCD 10 | 400 |
| | White/green | 12 | BCD 9 | 200 |
| | Brown/green | 13 | BCD 8 | 100 |
| | not connected | 14 | | |
| | not connected | 15 | + 5 V | Low |

## Agilent Module to 3396 Integrators

| p/n 03396-60560 | Pin 3396 | Pin Agilent module | Signal Name | BCD Digit |
|---|---|---|---|---|
| 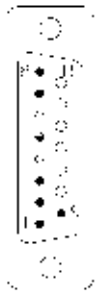 | 1 | 1 | BCD 5 | 20 |
| | 2 | 2 | BCD 7 | 80 |
| | 3 | 3 | BCD 6 | 40 |
| | 4 | 4 | BCD 4 | 10 |
| | 5 | 5 | BCD0 | 1 |
| | 6 | 6 | BCD 3 | 8 |
| | 7 | 7 | BCD 2 | 4 |
| | 8 | 8 | BCD 1 | 2 |
| | 9 | 9 | Digital ground | |
| | NC | 15 | + 5 V | Low |

# CAN/LAN Cables

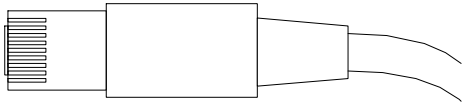

Both ends of this cable provide a modular plug to be connected to Agilent modules CAN or LAN connectors.

**Can Cables**

| p/n | Description |
|---|---|
| 5181-1516 | CAN cable, Agilent module to module, 0.5 m |
| 5181-1519 | CAN cable, Agilent module to module, 1 m |

**LAN Cables**

| p/n | Description |
|---|---|
| 5023-0203 | Cross-over network cable, shielded, 3 m (for point to point connection) |
| 5023-0202 | Twisted pair network cable, shielded, 7 m (for point to point connection) |

# RS-232 Cables

| p/n | Description |
|---|---|
| RS232-61601 | RS-232 cable, 2.5 m<br>Instrument to PC, 9-to-9 pin (female). This cable has special pin-out, and is not compatible with connecting printers and plotters. It is also called "Null Modem Cable" with full handshaking where the wiring is made between pins 1-1, 2-3, 3-2, 4-6, 5-5, 6-4, 7-8, 8-7, 9-9. |
| 5181-1561 | RS-232 cable, 8 m |

# USB

To connect a USB Flash Drive use a USB OTG cable with Mini-B plug and A socket.

| p/n | Description |
|---|---|
| 5188-8050 | USB A M-USB Mini B 3 m (PC-Module) |
| 5188-8049 | USB A F-USB Mini B M OTG (Module to Flash Drive) |

# 11 Hardware Information

This chapter describes the module in more detail on hardware and electronics.

**General Hardware Information 319**
Firmware Description 319
Electrical Connections 321
Interfaces 324
Instrument Layout 331
Early Maintenance Feedback (EMF) 331

**Module-Specific Hardware Information 333**
Setting the 6-bit Configuration Switch 333

# General Hardware Information

This section provides detailed hardware information on firmware that is valid for this module.

## Firmware Description

The firmware of the instrument consists of two independent sections:

- a non-instrument specific section, called *resident system*
- an instrument specific section, called *main system*

### Resident System

This resident section of the firmware is identical for all Agilent 1100/1200/1220/1260/1290 series modules. Its properties are:

- the complete communication capabilities (CAN, LAN, USB and RS- 232)
- memory management
- ability to update the firmware of the 'main system'

### Main System

Its properties are:

- the complete communication capabilities (CAN, LAN, USB and RS- 232)
- memory management
- ability to update the firmware of the 'resident system'

In addition the main system comprises the instrument functions that are divided into common functions like

- run synchronization through APG/ERI remote,
- error handling,
- diagnostic functions,

- or module specific functions like
  - internal events such as lamp control, filter movements,
  - raw data collection and conversion to absorbance.

## Firmware Updates

Firmware updates can be done with the Agilent Lab Advisor software with files on the hard disk (latest version should be used).

Required tools, firmware and documentation are available from the Agilent web: https://www.agilent.com/en-us/firmwareDownload?whid=69761

The file naming conventions are:

PPPP_RVVV_XXX.dlb, where

- PPPP is the product number, for example, 1315B for the G1315B DAD,
- R the firmware revision, for example, A for G1315B or B for the G1315C DAD,
- VVV is the revision number, for example 650 is revision 6.50,
- XXX is the build number of the firmware.

For instructions on firmware updates refer to section *Replacing Firmware* in chapter *Maintenance* or use the documentation provided with the *Firmware Update Tools*.

**NOTE**

Update of main system can be done in the resident system only. Update of the resident system can be done in the main system only.
Main and resident firmware must be from the same set.

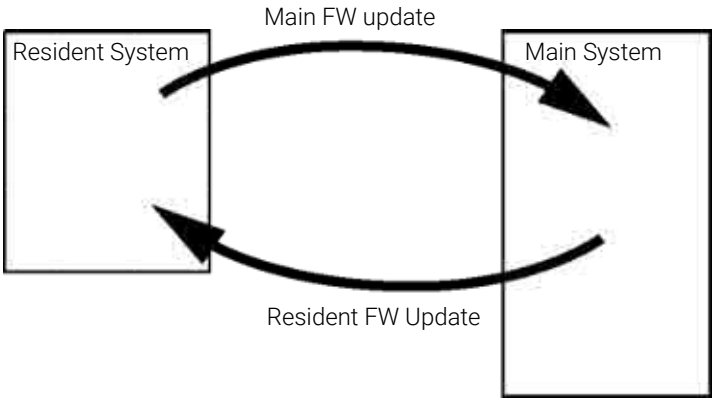


**Figure 42:** Firmware update mechanism

**NOTE**

Some modules are limited in downgrading due to their mainboard version or their initial firmware revision. For example, a G1315C DAD SL cannot be downgraded below firmware revision B.01.02 or to a A.xx.xx.
Some modules can be re-branded (e.g. G1314C to G1314B) to allow operation in specific control software environments. In this case, the feature set of the target type is used and the feature set of the original one is lost. After re-branding (e.g. from G1314B to G1314C), the original feature set is available again.
All this specific information is described in the documentation provided with the firmware update tools.

The firmware update tools, firmware and documentation are available from the Agilent web.

- https://www.agilent.com/en-us/firmwareDownload?whid=69761

## Electrical Connections

- The CAN bus is a serial bus with high-speed data transfer. The two connectors for the CAN bus are used for internal module data transfer and synchronization.
- The ERI connector may be used in combination with other analytical instruments from Agilent Technologies if you want to use features such as start, stop, common shut down, prepare, and so on.

- With the appropriate software, the LAN connector may be used to control the module from a computer through a LAN connection. This connector is activated and can be configured with the configuration switch.
- With the appropriate software, the USB connector may be used to control the module from a computer through a USB connection.
- The power input socket accepts a line voltage of 100 – 240 VAC ± 10 % with a line frequency of 50 or 60 Hz. Maximum power consumption varies by module. There is no voltage selector on your module because the power supply has wide-ranging capability. There are no externally accessible fuses because automatic electronic fuses are implemented in the power supply.

**WARNING**

**Electric shock due to insufficient insulation of connected instruments**

**Personal injury or damage to the instrument**

— **Any other instruments connected to this instrument shall be approved to a suitable safety standard and must include reinforced insulation from the mains.**

**NOTE**

Never use cables other than the ones supplied by Agilent Technologies to ensure proper functionality and compliance with safety or EMC regulations.

## Rear View of the Module

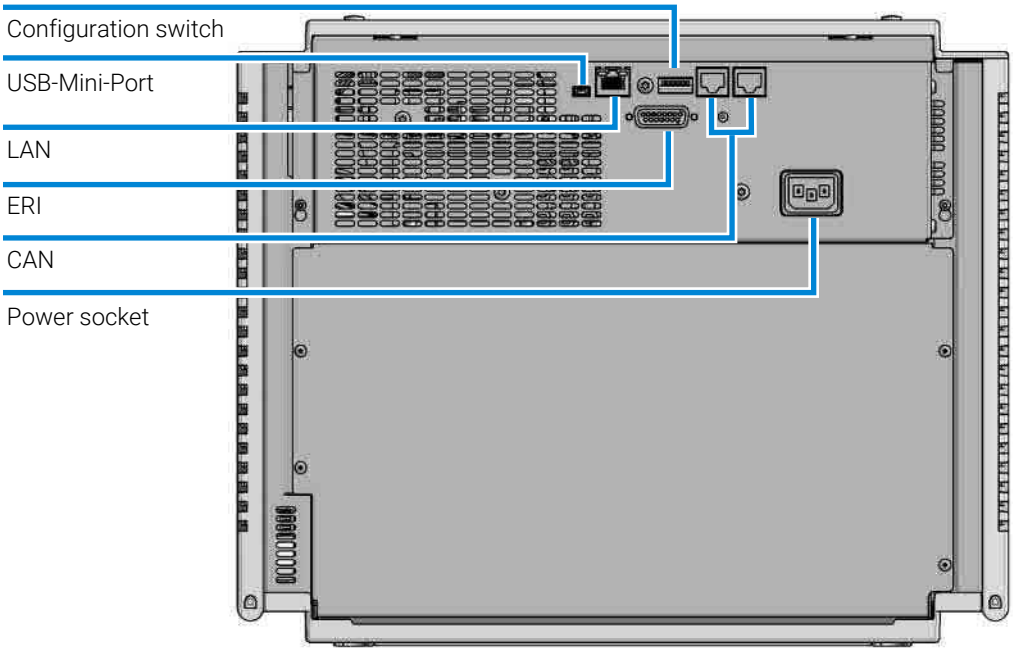


**Figure 43:** Rear view of multisampler - electrical connections and label

## Serial Number Information

The serial number information on the instrument labels provide the following information:

| CCXZZ00000 | Format |
|---|---|
| CC | Country of manufacturing<br>• DE = Germany<br>• JP = Japan<br>• CN = China |
| X | Alphabetic character A-Z (used by manufacturing) |
| ZZ | Alpha-numeric code 0-9, A-Z, where each combination unambiguously denotes a module (there can be more than one code for the same module) |
| 00000 | Serial number |

# Interfaces

The Agilent InfinityLab LC Series modules provide the following interfaces:

**Table 20:** Agilent InfinityLab LC Series interfaces

| Module | CAN | USB | LAN (on-board) | RS-232 | Analog | APG (A) / ERI (E) | Special |
|---|---|---|---|---|---|---|---|
| Pumps | | | | | | | |
| G7104A/C | 2 | No | Yes | Yes | 1 | A | |
| G7110B | 2 | Yes | Yes | No | No | E | |
| G7111A/B, G5654A | 2 | Yes | Yes | No | No | E | |
| G7112B | 2 | Yes | Yes | No | No | E | |
| G7120A, G7132A | 2 | No | Yes | Yes | 1 | A | |
| G7161A/B | 2 | Yes | Yes | No | No | E | |
| Samplers | | | | | | | |
| G7129A/B/C | 2 | Yes | Yes | No | No | E | |
| G7167A/B/C, G7137A, G5668A, G3167A | 2 | Yes | Yes | No | No | E | |
| G7157A | 2 | Yes | Yes | No | No | E | |
| Detectors | | | | | | | |
| G7114A/B | 2 | Yes | Yes | No | 1 | E | |
| G7115A | 2 | Yes | Yes | No | 1 | E | |
| G7117A/B/C | 2 | Yes | Yes | No | 1 | E | |
| G7121A/B | 2 | Yes | Yes | No | 1 | E | |
| G7162A/B | 2 | Yes | Yes | No | 1 | E | |
| G7165A | 2 | Yes | Yes | No | 1 | E | |
| Fraction Collectors | | | | | | | |
| G7158B | 2 | Yes | Yes | No | No | E | |
| G7159B | 2 | Yes | Yes | No | No | E | |

| Module | CAN | USB | LAN (on-board) | RS-232 | Analog | APG (A) / ERI (E) | Special |
|---|---|---|---|---|---|---|---|
| G7166A | 2 | No | No | No | No | No | Requires a host module with on-board LAN with minimum FW B.06.40 or C.06.40, or with additional G1369C LAN Card |
| G1364E/F, G5664B | 2 | Yes | Yes | No | No | E | THERMOSTAT for G1330B |
| Others | | | | | | | |
| G1170A | 2 | No | No | No | No | No | Requires a host module with on-board LAN or with additional G1369C LAN Card. |
| G7116A/B | 2 | No | No | No | No | No | Requires a host module with on-board LAN or with additional G1369C LAN Card. |
| G7122A | No | No | No | Yes | No | A | |
| G7170B | 2 | No | No | No | No | No | Requires a host module with on-board LAN with minimum FW B.06.40 or C.06.40, or with additional G1369C LAN Card |

**NOTE**

LAN connection is made between at least one of the Agilent modules and the Control PC.

— If an Assist Hub is installed, connect the LAN to the Lab LAN port of this module.

— If an Assist Hub is NOT installed and a detector (DAD/MWD/FLD/VWD/RID) is installed, connect the LAN to this module.

— If an Assist Hub is NOT installed and there are multiple detectors with spectral capabilities, consider using additional LAN connections for each detector.

— If an Assist Hub is installed, connect additional LAN connections from the detectors and pumps to the Assist Hub.

- CAN connectors as interface to other modules
- LAN connector as interface to the control software
- RS-232C as interface to a computer

- USB (Universal Series Bus) as interface to a computer
- REMOTE connector as interface to other Agilent products
- Analog output connector for signal output

## Overview Interfaces

### CAN

The CAN is inter-module communication interface. It is a 2-wire serial bus system supporting high speed data communication and real-time requirement.

### LAN

The modules have either an interface slot for a LAN card (e.g. Agilent G1369B/C LAN Interface) or they have an on-board LAN interface (e.g. detectors G1315C/D DAD and G1365C/D MWD). This interface allows the control of the module/ system via a PC with the appropriate control software. Some modules have neither on-board LAN nor an interface slot for a LAN card (e.g. G1170A Valve Drive or G4227A Flexible Cube). These are hosted modules and require a Host module with firmware B.06.40 or later or with additional G1369C LAN Card.

**NOTE**

LAN connection is made between at least one of the Agilent modules and the Control PC.

— If an Assist Hub is installed, connect the LAN to the Lab LAN port of this module.

— If an Assist Hub is NOT installed and a detector (DAD/MWD/FLD/VWD/RID) is installed, connect the LAN to this module.

— If an Assist Hub is NOT installed and there are multiple detectors with spectral capabilities, consider using additional LAN connections for each detector.

— If an Assist Hub is installed, connect additional LAN connections from the detectors and pumps to the Assist Hub.

### USB

The USB interface replaces the RS-232 Serial interface in new generation modules. For details on USB refer to USB (Universal Serial Bus) on page 330.

## Analog Signal Output

The analog signal output can be distributed to a recording device. For details refer to the description of the module's mainboard.

## Remote (ERI)

The ERI (Enhanced Remote Interface) connector may be used in combination with other analytical instruments from Agilent Technologies if you want to use features as common shut down, prepare, and so on.

It allows easy connection between single instruments or systems to ensure coordinated analysis with simple coupling requirements.

The subminiature D connector is used. The module provides one remote connector which is inputs/outputs (wired- or technique).

To provide maximum safety within a distributed analysis system, one line is dedicated to SHUT DOWN the system's critical parts in case any module detects a serious problem. To detect whether all participating modules are switched on or properly powered, one line is defined to summarize the POWER ON state of all connected modules. Control of analysis is maintained by signal readiness READY for next analysis, followed by START of run and optional STOP of run triggered on the respective lines. In addition PREPARE and START REQUEST may be issued. The signal levels are defined as:

- standard TTL levels (0 V is logic true, + 5.0 V is false),
- fan-out is 10,
- input load is 2.2 kOhm against + 5.0 V, and
- output are open collector type, inputs/outputs (wired- or technique).

**NOTE**

All common TTL circuits operate with a 5 V power supply. A TTL signal is defined as "low" or L when between 0 V and 0.8 V and "high" or H when between 2.0 V and 5.0 V (with respect to the ground terminal).

**Table 21:** ERI signal distribution

| Pin | Signal | Description |
|---|---|---|
| 1 | START REQUEST | (L) Request to start injection cycle (for example, by start key on any module). Receiver is the autosampler. |
| 2 | STOP | (L) Request to reach system ready state as soon as possible (for example, stop run, abort or finish and stop injection). Receiver is any module performing run-time controlled activities. |

| Pin | Signal | Description |
|---|---|---|
| 3 | READY | (H) System is ready for next analysis. Receiver is any sequence controller. |
| 4 | POWER ON | (H) All modules connected to system are switched on. Receiver is any module relying on operation of others. |
| 5 | | Not used |
| 6 | SHUT DOWN | (L) System has serious problem (for example, leak: stops pump). Receiver is any module capable to reduce safety risk. |
| 7 | START | (L) Request to start run / timetable. Receiver is any module performing run-time controlled activities. |
| 8 | PREPARE | (L) Request to prepare for analysis (for example, calibration, detector lamp on). Receiver is any module performing pre-analysis activities. |

### Special Interfaces

There is no special interface for this module.

## ERI (Enhanced Remote Interface)

ERI replaces the AGP Remote Interface that is used in the HP 1090/1040/1050/1100 HPLC systems and Agilent 1100/1200/1200 Infinity HPLC modules. All new InfinityLab LC Series products using the communication board core electronics use ERI. This interface is already used in the Agilent Universal Interface Box 2 (UIB2)

### ERI Description

The ERI interface contains eight individual programmable input/output pins. In addition, it provides 24 V power and 5 V power and a serial data line to detect and recognize further add-ons that could be connected to this interface. This way the interface can support various additional devices like sensors, triggers (in and out) and small controllers, etc.

ERI

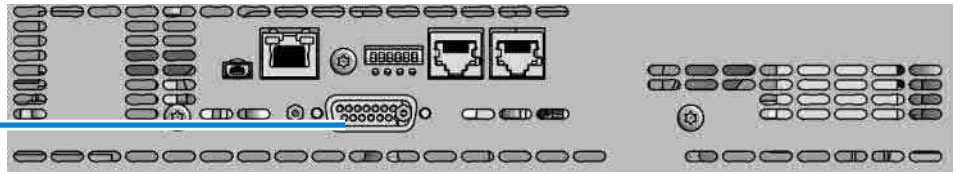

**Figure 44:** Location of the ERI interface

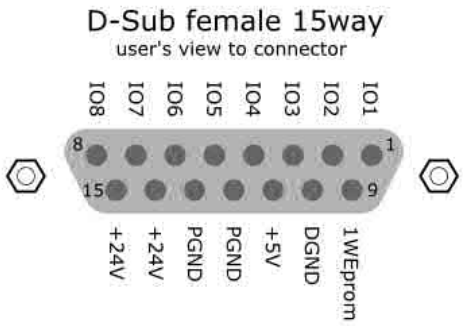


| Pin | Enhanced Remote |
|---|---|
| 1 | IO 1 (START REQUEST) |
| 2 | IO 2 (STOP) |
| 3 | IO 3 (READY) |
| 4 | IO 4 (POWER ON) |
| 5 | IO 5 (NOT USED) |
| 6 | IO 6 (SHUT DOWN) |
| 7 | IO 7 (START) |
| 8 | IO 8 (PREPARE) |
| 9 | 1 wire DATA |
| 10 | DGND |
| 11 | +5 V ERI out |
| 12 | PGND |
| 13 | PGND |
| 14 | +24 V ERI out |
| 15 | +24 V ERI out |

## IO (Input/Output) Lines

- Eight generic bi-directional channels (input or output).
- Same as the APG Remote.
- Devices like valves, relays, ADCs, DACs, controllers can be supported/ controlled.

### 1-Wire Data (Future Use)

This serial line can be used to read out an EPROM or write into an EPROM of a connected ERI-device. The firmware can detect the connected type of device automatically and update information in the device (if required).

### 5V Distribution (Future Use)

- Available directly after turning on the hosting module (assures that the firmware can detect certain basic functionality of the device).
- For digital circuits or similar.
- Provides 500 mA maximum.
- Short-circuit proof with automatic switch off (by firmware).

### 24V Distribution (Future Use)

- Available by firmware command (defined turn on/off).
- For devices that need higher power
  - Class 0: 0.5 A maximum (12 W)
  - Class 1: 1.0 A maximum (24 W)
  - Class 2: 2.0 A maximum (48 W)
- Class depends on hosting module's internal power overhead.
- If a connected device requires more power the firmware detects this (overcurrent detection) and provides the information to the user interface.
- Fuse used for safety protection (on board).
- Short circuit will be detected through hardware.

## USB (Universal Serial Bus)

USB (Universal Serial Bus) - replaces RS232, supports:

- a PC with control software (for example Agilent Lab Advisor)
- USB Flash Disk

## Instrument Layout

The industrial design of the module incorporates several innovative features. It uses Agilent's E-PAC concept for the packaging of electronics and mechanical assemblies. This concept is based upon the use of expanded polypropylene (EPP) layers of foam plastic spacers in which the mechanical and electronic boards components of the module are placed. This pack is then housed in a metal inner cabinet which is enclosed by a plastic external cabinet. The advantages of this packaging technology are:

- virtual elimination of fixing screws, bolts or ties, reducing the number of components and increasing the speed of assembly/disassembly,
- the plastic layers have air channels molded into them so that cooling air can be guided exactly to the required locations,
- the plastic layers help cushion the electronic and mechanical parts from physical shock, and
- the metal inner cabinet shields the internal electronics from electromagnetic interference and also helps to reduce or eliminate radio frequency emissions from the instrument itself.

## Early Maintenance Feedback (EMF)

Maintenance requires the exchange of components that are subject to wear or stress. Ideally, the frequency at which components are exchanged should be based on the intensity of use of the module and the analytical conditions, and not on a predefined time interval. The early maintenance feedback (EMF) feature monitors the use of specific components in the instrument, and provides feedback when the user-selectable limits have been exceeded. The visual feedback in the user interface provides an indication that maintenance procedures should be scheduled.

### EMF Counters

EMF counters increment with use and can be assigned a maximum limit which provides visual feedback in the user interface when the limit is exceeded. Some counters can be reset to zero after the required maintenance procedure.

## Using the EMF Counters

The user-settable EMF limits for the EMF Counters enable the early maintenance feedback to be adapted to specific user requirements. The useful maintenance cycle is dependent on the requirements for use. Therefore, the definition of the maximum limits needs to be determined based on the specific operating conditions of the instrument.

## Setting the EMF Limits

The setting of the EMF limits must be optimized over one or two maintenance cycles. Initially the default EMF limits should be set. When instrument performance indicates maintenance is necessary, take note of the values displayed by the EMF counters. Enter these values (or values slightly less than the displayed values) as EMF limits, and then reset the EMF counters to zero. The next time the EMF counters exceed the new EMF limits, the EMF flag will be displayed, providing a reminder that maintenance needs to be scheduled.

# Module-Specific Hardware Information

## Setting the 6-bit Configuration Switch

The 6-bit configuration switch is located at the rear of the module with communication board electronics. Switch settings provide configuration parameters for LAN and instrument specific initialization procedures.

All modules with communication board electronics:

- Default is ALL switches DOWN (best settings).
  - Default IP address for LAN 192.168.254.11
- For specific LAN modes switches 4-5 must be set as required.
- For boot resident/cold start modes switches 1+2 or 6 must be UP.

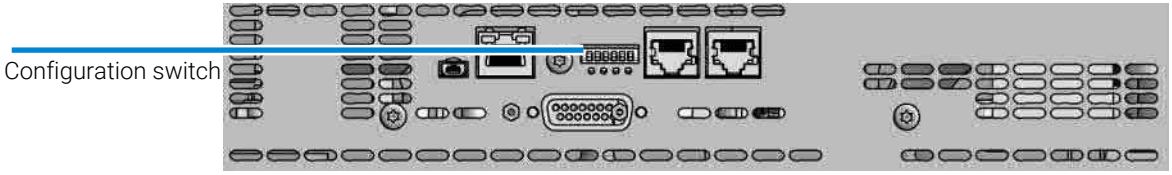


**Figure 45:** Location of configuration switch

**Table 22:** 6-bit configuration switch

| SW1 | SW2 | SW3 | SW4 | SW5 | SW6 | Mode | Init Mode |
|---|---|---|---|---|---|---|---|
| 0 | 0 | 0 | 0 | 0 | 0 | COM | Use Default IP Address (192.168.254.11, Subnet mask: 255.255.255.0) |
| 0 | 0 | 0 | 0 | 1 | 0 | COM | Use Stored IP Address |
| 0 | 0 | 0 | 1 | 0 | 0 | COM | USE DHCP to request IP Address (Host name will be the MAC address) |
| 1 | 0 | 0 | 0 | 0 | 0 | Test | Boot Main System/Keep Data |
| 1 | 1 | 0 | 0 | 0 | 0 | Test | Boot Resident System/Keep Data |

| SW1 | SW2 | SW3 | SW4 | SW5 | SW6 | Mode | Init Mode |
|---|---|---|---|---|---|---|---|
| 1 | 0 | 0 | 0 | 0 | 1 | Test | Boot Main System/Revert to Default Data |
| 1 | 1 | 0 | 0 | 0 | 1 | Test | Boot Resident System/Revert to Default Data |

### Legend:

0 (switch down), 1 (switch up), SW (switch)

## Special Settings

### Boot-Resident/Main

Firmware update procedures may require this mode in case of firmware loading errors (main/resident firmware part).

If you use the following switch settings and power the instrument up again, the instrument firmware stays in the resident/main mode. In resident mode, it is not operable as a module. It only uses basic functions of the operating system for example, for communication. In this mode the main firmware can be loaded (using update utilities).

### Forced Cold Start

A forced cold start can be used to bring the module into a defined mode with default parameter settings.

- Boot Main System / Revert to Default Data

  The instrument will boot to main mode and changes to the module's default parameter. May be also required to load resident firmware into the module.
- Boot Resident System / Revert to Default Data

  The instrument will boot to resident mode and changes to the module's default parameter. May be also required to load main firmware into the module.

**CAUTION**

Loss of data

Forced cold start erases all methods and data stored in the non-volatile memory. Exceptions are calibration settings, diagnosis and repair log books which will not be erased.

— Save your methods and data before executing a forced cold start.

# 12 LAN Configuration

In an HPLC stack, the detectors produce most data, followed by the pumps. Use either of these modules for the LAN connection.

# 13 Appendix

This chapter provides additional information on safety, legal and web.

**General Safety Information 338**
Safety Standards 338
General 338
Before Applying Power 339
Ground the Instrument 339
Do Not Operate in an Explosive Atmosphere 340
Do Not Remove the Instrument Cover 340
Do Not Modify the Instrument 340
In Case of Damage 340
Solvent Information 341
Refrigerant 343
Magnets 344
Safety Symbols 345

**Material Information 347**
General Information About Solvent/Material Compatibility 347

**At-a-Glance Details About Agilent Capillaries 353**

**Waste Electrical and Electronic Equipment (WEEE) Directive 357**

**Radio Interference 358**

**RFID Statement 359**

**Sound Emission 361**

**Agilent Technologies on Internet 362**

# General Safety Information

The following general safety precautions must be observed during all phases of operation, service, and repair of this instrument. Failure to comply with these precautions or with specific warnings elsewhere in this manual violates safety standards of design, manufacture, and intended use of the instrument. Agilent Technologies assumes no liability for the customer's failure to comply with these requirements.

WARNING

**Ensure the proper usage of the equipment.**

**The protection provided by the equipment may be impaired.**

- **The operator of this instrument is advised to use the equipment in a manner as specified in this manual.**

## Safety Standards

This is a Safety Class I instrument (provided with terminal for protective earthing) and has been manufactured and tested according to international safety standards.

## General

Do not use this product in any manner not specified by the manufacturer. The protective features of this product may be impaired if it is used in a manner not specified in the operation instructions.

## Before Applying Power

**WARNING**

**Wrong voltage range, frequency or cabling**

**Personal injury or damage to the instrument**

- **Verify that the voltage range and frequency of your power distribution matches to the power specification of the individual instrument.**
- **Never use cables other than the ones supplied by Agilent Technologies to ensure proper functionality and compliance with safety or EMC regulations.**
- **Make all connections to the unit before applying power.**

**WARNING**

**Use of unsupplied cables**

**Using cables not supplied by Agilent Technologies can lead to damage of the electronic components or personal injury.**

- **Never use cables other than the ones supplied by Agilent Technologies to ensure proper functionality and compliance with safety or EMC regulations.**

**NOTE**

Note the instrument's external markings described under Safety Symbols on page 345.

## Ground the Instrument

**WARNING**

**Missing electrical ground**

**Electrical shock**

- **If your product is provided with a grounding type power plug, the instrument chassis and cover must be connected to an electrical ground to minimize shock hazard.**
- **The ground pin must be firmly connected to an electrical ground (safety ground) terminal at the power outlet. Any interruption of the protective (grounding) conductor or disconnection of the protective earth terminal will cause a potential shock hazard that could result in personal injury.**

## Do Not Operate in an Explosive Atmosphere

**WARNING**

**Presence of flammable gases or fumes**

**Explosion hazard**

- **Do not operate the instrument in the presence of flammable gases or fumes.**

## Do Not Remove the Instrument Cover

**WARNING**

**Instrument covers removed**

**Electrical shock**

- **Do Not Remove the Instrument Cover**
- **Only Agilent authorized personnel are allowed to remove instrument covers. Always disconnect the power cables and any external circuits before removing the instrument cover.**

## Do Not Modify the Instrument

Do not install substitute parts or perform any unauthorized modification to the product. Return the product to an Agilent Sales and Service Office for service and repair to ensure that safety features are maintained.

## In Case of Damage

**WARNING**

**Damage to the module**

**Personal injury (for example electrical shock, intoxication)**

- **Instruments that appear damaged or defective should be made inoperative and secured against unintended operation until they can be repaired by qualified service personnel.**

## Solvent Information

**WARNING**

**Toxic, flammable and hazardous solvents, samples and reagents**

**The handling of solvents, samples and reagents can hold health and safety risks.**

- **When working with these substances observe appropriate safety procedures (for example by wearing goggles, safety gloves and protective clothing) as described in the material handling and safety data sheet supplied by the vendor, and follow good laboratory practice.**
- **Do not use solvents with an auto-ignition temperature below 200 °C (392 °F). Do not use solvents with a boiling point below 56 °C (133 °F).**
- **Avoid high vapor concentrations. Keep the solvent temperature at least 40 °C (72 °F) below the boiling point of the solvent used. This includes the solvent temperature in the sample compartment. For the solvents methanol and ethanol keep the solvent temperature at least 25 °C (45 °F) below the boiling point.**
- **Do not operate the instrument in an explosive atmosphere.**
- **Do not use solvents of ignition Class IIC according IEC 60079-20-1 (for example, carbon disulfide).**
- **Reduce the volume of substances to the minimum required for the analysis.**
- **Never exceed the maximum permissible volume of solvents (8 L) in the solvent cabinet. Do not use bottles that exceed the maximum permissible volume as specified in the usage guideline for solvent cabinet.**
- **Ground the waste container.**
- **Regularly check the filling level of the waste container. The residual free volume in the waste container must be large enough to collect the waste liquid.**
- **To achieve maximal safety, regularly check the tubing for correct installation.**

**NOTE**

For details, see the usage guideline for the solvent cabinet. A printed copy of the guideline has been shipped with the solvent cabinet, electronic copies are available in the Agilent Information Center or via the Internet.

## Recommendations on the Use of Solvents

Observe the following recommendations on the use of solvents.

- Brown glass ware can avoid growth of algae.
- Follow the recommendations for avoiding the growth of algae, see the pump manuals.
- Small particles can permanently block capillaries and valves. Therefore, always filter solvents through 0.22 µm filters.
- Avoid or minimize the use of solvents that may corrode parts in the flow path. Consider specifications for the pH range given for different materials such as flow cells, valve materials etc. and recommendations in subsequent sections.
- Avoid the use of the following steel-corrosive solvents:
  - solutions of alkali halides and their respective acids (for example, lithium iodide, potassium chloride, and so on),
  - high concentrations of inorganic acids like sulfuric acid and nitric acid, especially at higher temperatures (if your chromatography method allows, replace by phosphoric acid or phosphate buffer which are less corrosive against stainless steel),
  - halogenated solvents or mixtures which form radicals and/or acids, for example:

    $2CHCl_3 + O_2 \rightarrow 2COCl_2 + 2HCl$

    This reaction, in which stainless steel probably acts as a catalyst, occurs quickly with dried chloroform if the drying process removes the stabilizing alcohol,
  - chromatographic grade ethers, which can contain peroxides (for example, THF, dioxane, diisopropyl ether) should be filtered through dry aluminium oxide which adsorbs the peroxides,
  - solvents containing strong complexing agents (e.g. EDTA),
  - mixtures of carbon tetrachloride with 2-propanol or THF.
- Avoid the use of dimethyl formamide (DMF). Polyvinylidene fluoride (PVDF), which is used in leak sensors, is not resistant to DMF.

## Recommended Wash Solvents

- water
- ethanol

- methanol
- water/acid (especially for basic compounds)
- water/base (especially for acidic compounds)
- water/acetonitrile

**NOTE** For different wash solvents as mentioned above, verify that the wash solvent is suitable for the silicone wash tubing.

### Solvent Compatibility of Tubings for Peristaltic Pumps

The table shows the chemical resistance properties of Silicone and PharMed tubing to different needle wash solvents:

**Table 23:** Solvent Compatibility of Silicone and PharMed Tubing

| | Silicone | PharMed |
|---|---|---|
| Acids | | |
| • weak | • good | • very good |
| • medium | • unsatisfactory | • good |
| • strong | • not recommended | • not recommended |
| Alkaline solution | | |
| • weak | • good | • very good |
| • medium | • unsatisfactory | • very good |
| • strong | • not recommended | • good |
| Hydrocarbons | | |
| • aliphatic | • not recommended | • not recommended |
| • aromatizised | • not recommended | • not recommended |
| • halogenated | • not recommended | • not recommended |

## Refrigerant

**Table 24:** Physical properties of refrigerant R600a (isobutane)

| | |
|---|---|
| Molecular weight | 58.12 |
| Critical temperature | 134.98 °C |

| | |
|---|---|
| Critical pressure | 36.6 bar |
| Boiling point | -11.7 °C |

**CAUTION**

General hazards and improper disposal

Improper disposal of the media and components used pollutes the environment.

- The disposal or scrapping of the Sample Thermostat must be carried out by a qualified disposal company.
- All media must be disposed of in accordance with national and local regulations.
- Please contact your local Agilent Service Center in regard to safe environmental disposal of the appliance or check www.agilent.com for more info.

**CAUTION**

Risk of fire or explosion

- Dispose of properly in accordance with federal or local regulations. Flammable Refrigerant Used.
- Do not dispose of in domestic household waste.
- To return unwanted products, contact your local Agilent office, or see http://www.agilent.com for more information.

## Magnets

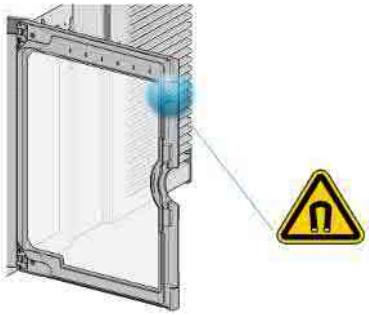

**Figure 46:** Magnet in door of the multisampler

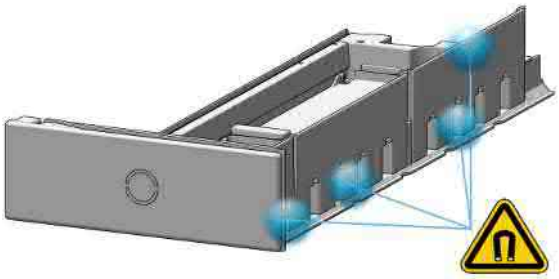

**Figure 47:** Magnets in drawers of the multisampler

## Safety Symbols

**Table 25:** Symbols

| | |
|---|---|
| | The apparatus is marked with this symbol when the user shall refer to the instruction manual in order to protect risk of harm to the operator and to protect the apparatus against damage. |
| | Indicates dangerous voltages. |
| | Indicates a protected ground terminal. |
| | The apparatus is marked with this symbol when hot surfaces are available and the user should not touch it when heated up. |
| | Indicates flammable material used. Consult the Agilent Information Center / User Manual before attempting to install or service this equipment. Follow all safety precautions. |
| | Confirms that a manufactured product complies with all applicable European Community directives. The European Declaration of Conformity is available at: http://regulations.corporate.agilent.com/DoC/search.htm |
| | Manufacturing date. |

| | |
|---|---|
| REF | Product Number |
| SN | Serial Number |
| | Power symbol indicates On/Off.<br>The apparatus is not completely disconnected from the mains supply when the on/off switch is in the Off position |
| | Pacemaker<br>Magnets could affect the functioning of pacemakers and implanted heart defibrillators. A pacemaker could switch into test mode and cause illness. A heart defibrillator may stop working. If you wear these devices keep at least 55 mm distance to magnets. Warn others who wear these devices from getting too close to magnets. |
| | Magnetic field<br>Magnets produce a far-reaching, strong magnetic field. They could damage TVs and laptops, computer hard drives, credit and ATM cards, data storage media, mechanical watches, hearing aids and speakers. Keep magnets at least 25 mm away from devices and objects that could be damaged by strong magnetic fields. |
| | Indicates a pinching or crushing hazard |
| | Indicates a piercing or cutting hazard. |

WARNING

**A WARNING**

**alerts you to situations that could cause physical injury or death.**

- **Do not proceed beyond a warning until you have fully understood and met the indicated conditions.**

CAUTION

A CAUTION

alerts you to situations that could cause loss of data, or damage of equipment.

- Do not proceed beyond a caution until you have fully understood and met the indicated conditions.

# Material Information

This section provides detailed information about materials used in the HPLC system and general information about solvent/material compatibility.

## General Information About Solvent/Material Compatibility

Materials in the flow path are carefully selected based on Agilent's experiences in developing highest-quality instruments for HPLC analysis over several decades. These materials exhibit excellent robustness under typical HPLC conditions. For any special condition, please consult the material information section or contact Agilent.

### Disclaimer

Subsequent data was collected from external resources and is meant as a reference. Agilent cannot guarantee the correctness and completeness of such information. Data is based on compatibility libraries, which are not specific for estimating the long-term life time under specific but highly variable conditions of UHPLC systems, solvents, solvent mixtures, and samples. Information also cannot be generalized due to catalytic effects of impurities like metal ions, complexing agents, oxygen etc. Apart from pure chemical corrosion, other effects like electro corrosion, electrostatic charging (especially for nonconductive organic solvents), swelling of polymer parts etc. need to be considered. Most data available refers to room temperature (typically 20 – 25 °C, 68 – 77 °F). If corrosion is possible, it usually accelerates at higher temperatures. If in doubt, please consult technical literature on chemical compatibility of materials.

### MP35N

MP35N is a nonmagnetic, nickel-cobalt-chromium-molybdenum alloy demonstrating excellent corrosion resistance (for example, against nitric and sulfuric acids, sodium hydroxide, and seawater) over a wide range of concentrations and temperatures. In addition, this alloy shows exceptional

resistance to high-temperature oxidation. Due to excellent chemical resistance and toughness, the alloy is used in diverse applications: dental products, medical devices, nonmagnetic electrical components, chemical and food processing equipment, marine equipment. Treatment of MP35N alloy samples with 10 % NaCl in HCl (pH 2.0 ) does not reveal any detectable corrosion. MP35N also demonstrates excellent corrosion resistance in a humid environment. Although the influence of a broad variety of solvents and conditions has been tested, users should keep in mind that multiple factors can affect corrosion rates, such as temperature, concentration, pH, impurities, stress, surface finish, and dissimilar metal contacts.

## Polyphenylene Sulfide (PPS)

Polyphenylene sulfide has outstanding stability even at elevated temperatures. It is resistant to dilute solutions of most inorganic acids, but it can be attacked by some organic compounds and oxidizing reagents. Nonoxidizing inorganic acids, such as sulfuric acid and phosphoric acid, have little effect on polyphenylene sulfide, but at high concentrations and temperatures, they can still cause material damage. Nonoxidizing organic chemicals generally have little effect on polyphenylene sulfide stability, but amines, aromatic compounds, and halogenated compounds may cause some swelling and softening over extended periods of time at elevated temperatures. Strong oxidizing acids, such as nitric acid (> 0.1 %), hydrogen halides (> 0.1 %), peroxy acids (> 1 %), or chlorosulfuric acid degrade polyphenylene sulfide. It is not recommended to use polyphenylene sulfide with oxidizing material, such as sodium hypochlorite and hydrogen peroxide. However, under mild environmental conditions, at low concentrations and for short exposure times, polyphenylene sulfide can withstand these chemicals, for example, as ingredients of common disinfectant solutions.

## PEEK

PEEK (Polyether-Ether Ketones) combines excellent properties regarding biocompatibility, chemical resistance, mechanical and thermal stability. PEEK is therefore the material of choice for UHPLC and biochemical instrumentation.

It is stable in the specified pH range (for the Bio-Inert LC system: pH 1 – 13 , see bio-inert module manuals for details), and inert to many common solvents.

There are still some known incompatibilities with chemicals such as chloroform, methylene chloride, THF, DMSO, strong acids (nitric acid > 10 %, sulfuric acid > 10 %, sulfonic acids, trichloroacetic acid), halogens or aqueous halogen solutions, phenol and derivatives (cresols, salicylic acid, and so on).

When used above room temperature, PEEK is sensitive to bases and various organic solvents, which can cause it to swell. Under such conditions, normal PEEK capillaries are sensitive to high pressure. Therefore, Agilent uses stainless steel clad PEEK capillaries in bio-inert systems. The use of stainless steel clad PEEK capillaries keeps the flow path free of steel and ensures pressure stability up to 600 bar. If in doubt, consult the available literature about the chemical compatibility of PEEK.

## Polyimide

Agilent uses semi-crystalline polyimide for rotor seals in valves and needle seats in autosamplers. One supplier of polyimide is DuPont, which brands polyimide as Vespel, which is also used by Agilent.

Polyimide is stable in a pH range between 1 and 10 and in most organic solvents. It is incompatible with concentrated mineral acids (e.g. sulphuric acid), glacial acetic acid, DMSO and THF. It is also degraded by nucleophilic substances like ammonia (e.g. ammonium salts in basic conditions) or acetates.

## Polyethylene (PE)

Agilent uses UHMW (ultra-high molecular weight)-PE/PTFE blends for yellow piston and wash seals, which are used in 1290 Infinity pumps, 1290 Infinity II/III pumps, the G7104C and for normal phase applications in 1260 Infinity pumps.

Polyethylene has a good stability for most common inorganic solvents including acids and bases in a pH range of 1 to 12.5 . It is compatible with many organic solvents used in chromatographic systems like methanol, acetonitrile and isopropanol. It has limited stability with aliphatic, aromatic and halogenated hydrocarbons, THF, phenol and derivatives, concentrated acids and bases. For normal phase applications, the maximum pressure should be limited to 200 bar.

## Tantalum (Ta)

Tantalum is inert to most common HPLC solvents and almost all acids except fluoric acid and acids with free sulfur trioxide. It can be corroded by strong bases (e.g. hydroxide solutions > 10 %, diethylamine). It is not recommended for the use with fluoric acid and fluorides.

## Stainless Steel (SST)

Stainless steel is inert against many common solvents. It is stable in the presence of acids and bases in a pH range of 1 to 12.5 . It can be corroded by acids below pH 2.3 . It can also corrode in following solvents:

- Solutions of alkali halides, their respective acids (for example, lithium iodide, potassium chloride) and aqueous solutions of halogens.
- High concentrations of inorganic acids like nitric acid, sulfuric acid, and organic solvents especially at higher temperatures (replace, if your chromatography method allows, by phosphoric acid or phosphate buffer, which are less corrosive against stainless steel).
- Halogenated solvents or mixtures, which form radicals and/or acids, for example:

  $2\ CHCl_3 + O_2 \rightarrow 2\ COCl_2 + 2\ HCl$

  This reaction, in which stainless steel probably acts as a catalyst, occurs quickly with dried chloroform if the drying process removes the stabilizing alcohol.
- Chromatographic grade ethers, which can contain peroxides (for example, THF, dioxane, diisopropyl ether). Such ethers should be filtered through dry aluminum oxide, which adsorbs the peroxides.
- Solutions of organic acids (acetic acid, formic acid, and so on) in organic solvents. For example, a 1 % solution of acetic acid in methanol will attack steel.
- Solutions containing strong complexing agents (for example, EDTA, ethylenediaminetetraacetic acid).
- Mixtures of carbon tetrachloride with isopropanol or THF.

## Titanium (Ti)

Titanium is highly resistant to oxidizing acids (for example, nitric, perchloric and hypochlorous acid) over a wide range of concentrations and temperatures. This is due to a thin oxide layer on the surface, which is stabilized by oxidizing compounds. Non-oxidizing acids (for example, hydrochloric, sulfuric and phosphoric acid) can cause slight corrosion, which increases with acid concentration and temperature. For example, the corrosion rate with 3 % HCl (about pH 0.1 ) at room temperature is about 13 µm/year. At room temperature, titanium is resistant to concentrations of about 5 % sulfuric acid (about pH 0.3 ). Addition of nitric acid to hydrochloric or sulfuric acids significantly reduces corrosion rates. Titanium is sensitive to acidic metal chlorides like $FeCl_3$ or $CuCl_2$.

Titanium is subject to corrosion in anhydrous methanol, which can be avoided by adding a small amount of water (about 3 %). Slight corrosion is possible with ammonia > 10 %.

### Diamond-Like Carbon (DLC)

Diamond-Like Carbon is inert to almost all common acids, bases, and solvents. There are no documented incompatibilities for HPLC applications.

### Fused Silica and Quartz ($SiO_2$)

Fused silica is used in Max Light Cartridges. Quartz is used for classical flow cell windows. It is inert against all common solvents and acids except hydrofluoric acid and acidic solvents containing fluorides. It is corroded by strong bases and should not be used above pH 12 at room temperature. The corrosion of flow cell windows can negatively affect measurement results. For a pH greater than 12, the use of flow cells with sapphire windows is recommended.

### Gold

Gold is inert to all common HPLC solvents, acids, and bases within the specified pH range. It can be corroded by complexing cyanides and concentrated acids like aqua regia.

### Zirconium Oxide ($ZrO_2$)

Zirconium Oxide is inert to almost all common acids, bases, and solvents. There are no documented incompatibilities for HPLC applications.

### Platinum/Iridium

Platinum/Iridium is inert to almost all common acids, bases, and solvents. There are no documented incompatibilities for HPLC applications.

## Fluorinated Polymers (PTFE, PFA, FEP, FFKM, PVDF)

Fluorinated polymers like PTFE (polytetrafluorethylene), PFA (perfluoroalkoxy), and FEP (fluorinated ethylene propylene) are inert to almost all common acids, bases, and solvents. FFKM is perfluorinated rubber, which is also resistant to most chemicals. As an elastomer, it may swell in some organic solvents like halogenated hydrocarbons.

TFE/PDD copolymer tubings, which are used in all Agilent degassers except G1322A/G7122A, are not compatible with fluorinated solvents like Freon, Fluorinert, or Vertrel. They have limited life time in the presence of hexafluoroisopropanol (HFIP). To ensure the longest possible life with HFIP, it is best to dedicate a particular chamber to this solvent, not to switch solvents, and not to let dry out the chamber. For optimizing the life of the pressure sensor, do not leave HFIP in the chamber when the unit is off.

The tubing of the leak sensor is made of PVDF (polyvinylidene fluoride), which is incompatible with the solvent DMF (dimethylformamide).

## Sapphire, Ruby, and $Al_2O_3$-Based Ceramics

Sapphire, ruby, and ceramics based on aluminum oxide $Al_2O_3$ are inert to almost all common acids, bases, and solvents. There are no documented incompatibilities for HPLC applications.

# At-a-Glance Details About Agilent Capillaries

The following section provides useful information about Agilent capillaries and its characteristics.

## Syntax for capillary description

Type - Material - Capillary dimensions - Fitting Left/Fitting right

**Table 26:** Example for a capillary description

| Code provided with the part | Meaing of the code |
|---|---|
| Color code: | Material of the product is MP35N, the inner diameter is 0.20 or 0.25 mm |
| Capillary | The part is a connection capillary |
| MP35N | Material of the part is MP35N |
| 0.25 x 80 mm | The part has an inner diameter of 0.25 mm and a length of 80 mm |
| SI/SI | Left fitting: Swagelok + 1.6 mm Port id, Intermediate<br>Right fitting: Swagelok + 1.6 mm Port id, Intermediate |

To get an overview of the code in use, see

- Color: Table 27 on page 354
- Type: Table 28 on page 354
- Material: Table 29 on page 355
- Dimension: Table 30 on page 355
- Fittings: Table 31 on page 356

## Color Coding Guide

**Table 27:** Color-coding key for Agilent capillary tubing

| Internal diameter in mm | | Color code |
|---|---|---|
| 0.015 | | Orange |
| 0.025 | | Yellow |
| 0.05 | | Beige |
| 0.075 | | Black |
| 0.075 | MP35N | Black with orange stripe |
| 0.1 | | Purple |
| 0.12 | | Red |
| 0.12 | MP35N | Red with orange stripe |
| 0.17 | | Green |
| 0.17 | MP35N | Green with orange stripe |
| 0.20 /0.25 | | Blue |
| 0.20 /0.25 | MP35N | Blue with orange stripe |
| 0.3 | | Grey |
| 0.50 | | Bone White |

**NOTE** As you move to smaller-volume, high efficiency columns, you'll want to use narrow id tubing, as opposed to the wider id tubing used for conventional HPLC instruments.

## Abbreviation Guide for Type

**Table 28:** Type (gives some indication on the primary function, like a loop or a connection capillary)

| Key | Description |
|---|---|
| Capillary | Connection capillaries |
| Loop | Loop capillaries |
| Seat | Autosampler needle seats |

| Key | Description |
|---|---|
| Tube | Tubing |
| Heat exchanger | Heat exchanger |

## Abbreviation Guide for Material

**Table 29:** Material (indicates which raw material is used for the capillary)

| Key | Description |
|---|---|
| ST | Stainless steel |
| Ti | Titanium |
| PK | PEEK |
| FS/PK | PEEK-coated fused silica [3] |
| PK/ST | Stainless steel-coated PEEK [4] |
| PFFE | PTFE |
| FS | Fused silica |
| MP35N | Nickel-cobalt-chromium-molybdenium alloy |

## Abbreviation Guide for Capillary Dimensions

**Table 30:** Capillary dimensions (indicates inner diameter (id), length, and volume of the capillary)

| Description |
|---|
| id (mm) x Length (mm) |
| Volume (µL) |

3 Fused silica in contact with solvent

4 Stainless steel-coated PEEK

## Abbreviation Guide for Fitting Left/Fitting Right

**Table 31:** Fitting left/fitting right (indicates which fitting is used on both ends of the capillary)

| Key | Description |
|---|---|
| W | Swagelok + 0.8 mm Port id |
| S | Swagelok + 1.6 mm Port id |
| M | Metric M4 + 0.8 mm Port id |
| E | Metric M3 + 1.6 mm Port id |
| U | Swagelok union |
| L | Long |
| X | Extra long |
| H | Long head |
| G | Small head SW 4 |
| N | Small head SW 5 |
| F | Finger-tight |
| V | 1200 bar |
| B | Bio |
| P | PEEK |
| I | Intermediate |

# Waste Electrical and Electronic Equipment (WEEE) Directive

This product complies with the European WEEE Directive marking requirements. The affixed label indicates that you must not discard this electrical/electronic product in domestic household waste.

**NOTE** Do not dispose of in domestic household waste
To return unwanted products, contact your local Agilent office, or see https://www.agilent.com for more information.

# Radio Interference

Cables supplied by Agilent Technologies are screened to provide optimized protection against radio interference. All cables are in compliance with safety or EMC regulations.

## Test and Measurement

If test and measurement equipment is operated with unscreened cables, or used for measurements on open set-ups, the user has to assure that under operating conditions the radio interference limits are still met within the premises.

# RFID Statement

## Brasil

Este equipamento não tem direito à proteção contra interferência prejudicial e não pode causar interferência em sistemas devidamente autorizados. Para mais informações, consulte o site da Anatel: https://www.gov.br/anatel/pt-br.

Este produto não é apropriado para uso em ambientes domésticos, pois poderá causar interferências eletromagnéticas que obrigam o usuário a tomar medidas necessárias para minimizar estas interferências.

## Canada

Statement according to RSS GEN Issue 5:

This device contains licence-exempt transmitter(s)/receiver(s) that comply with Innovation, Science and Economic Development Canada's licence-exempt RSS(s). Operation is subject to the following two conditions:

1. This device may not cause interference
2. This device must accept any interference, including interference that may cause undesired operation of the device.

Cet appareil contient des émetteurs / récepteurs exemptés de licence conformes aux RSS (RSS) d'Innovation, Sciences et Développement économique Canada. Le fonctionnement est soumis aux deux conditions suivantes:

1. Cet appareil ne doit pas causer d'interférences
2. Cet appareil doit accepter toutes les interférences, y compris celles susceptibles de provoquer un fonctionnement indésirable de l'appareil.

## Mexico

La operación de este equipo está sujeta a las siguientes dos condiciones:

1. es posible que este equipo o dispositivo no cause interferencia perjudicial y
2. este equipo o dispositivo debe aceptar cualquier interferencia, incluyendo la que pueda causar su operación no deseada.

## Thailand

This telecommuinication equipment conforms to NTC/NBTC technical requirement.

## USA

1. User Information according to FCC 15.21:Changes or modifications not expressly approved by the party responsible for compliance could void the user's authority to operate the equipment.
2. Part 15 Statement according to FCC 15.19:

   This device complies with Part 15 of the FCC Rules. Operation is subject to the following two conditions:

   - This device may not cause interference.
   - This device must accept any interference, including interference that may cause undesired operation.

**CAUTION**

Do not change or modify the equipment.

Changes or modifications not expressly approved by Agilent could void your authority to operate the equipment.

**NOTE**

This equipment has been tested and found to comply with the limits for a Class A digital device, pursuant to part 15 of the FCC Rules.

These limits are designed to provide reasonable protection against harmful interference when the equipment is operated in a commercial environment. This equipment generates, uses, and can radiate radio frequency energy and, if not installed and used in accordance with the instruction manual, may cause harmful interference to radio communications. Operation of this equipment in a residential area is likely to cause harmful interference in which case the user will be required to correct the interference at his own expense.

**Table 32:** Operating frequencies and maximum power levels

| Technology | Operating Frequencies/ Bands | Maximum Transmit Power Level |
|---|---|---|
| RFID | 125 kHz | 26.8 dBm |

# Sound Emission

## Sound Pressure

Sound pressure Lp < 70 db(A) according to DIN EN ISO 7779

## Schalldruckpegel

Schalldruckpegel Lp < 70 db(A) nach DIN EN ISO 7779

# Agilent Technologies on Internet

For the latest information on products and services visit our worldwide web site on the Internet at:

https://www.agilent.com

# In This Book

This manual contains technical reference information about the Agilent 1260 Infinity III SFC Multisampler (G4767A).

The manual describes the following:

- Introduction,
- site requirements and specifications,
- using the module,
- optimizing performance,
- troubleshooting and diagnostics,
- error information,
- maintenance,
- parts and materials,
- hardware information,
- LAN configuration,
- safety and related information.

www.agilent.com

© Agilent Technologies Inc. 2017 - 2024
Edition: 10/2024

Document No: SD-29000181 Rev. E