Agilent

Agilent InfinityLab LC Series

Vialsamplers

User Manual

Notices

Document Information

The information in this document also applies to 1260 Infinity II and 1290 Infinity II modules.

Document No: SD-29000242 Rev. G
Edition: 10/2024

Copyright

© Agilent Technologies, Inc.
2015-2024

No part of this manual may be reproduced in any form or by any means (including electronic storage and retrieval or translation into a foreign language) without prior agreement and written consent from Agilent Technologies, Inc. as governed by United States and international copyright laws.

Agilent Technologies
Hewlett-Packard-Strasse 8
76337 Waldbronn, Germany

Warranty

The material contained in this document is provided "as is," and is subject to being changed, without notice, in future editions. Further, to the maximum extent permitted by applicable law, Agilent disclaims all warranties, either express or implied, with regard to this manual and any information contained herein, including but not limited to the implied warranties of merchantability and fitness for a particular purpose. Agilent shall not be liable for errors or for incidental or consequential damages in connection with the furnishing, use, or performance of this document or of any information contained herein. Should Agilent and the user have a separate written agreement with warranty terms covering the material in this document that conflict with these terms, the warranty terms in the separate agreement shall control.

Technology Licenses

The hardware and/or software described in this document are furnished under a license and may be used or copied only in accordance with the terms of such license.

Restricted Rights Legend

U.S. Government Restricted Rights. Software and technical data rights granted to the federal government include only those rights customarily provided to end user customers. Agilent provides this customary commercial license in Software and technical data pursuant to FAR 12.211 (Technical Data) and 12.212 (Computer Software) and, for the Department of Defense, DFARS 252.227-7015 (Technical Data - Commercial Items) and DFARS 227.7202-3 (Rights in Commercial Computer Software or Computer Software Documentation).

Safety Notices

CAUTION

A **CAUTION** notice denotes a hazard. It calls attention to an operating procedure, practice, or the like that, if not correctly performed or adhered to, could result in damage to the product or loss of important data. Do not proceed beyond a **CAUTION** notice until the indicated conditions are fully understood and met.

WARNING

A WARNING notice denotes a hazard. It calls attention to an operating procedure, practice, or the like that, if not correctly performed or adhered to, could result in personal injury or death. Do not proceed beyond a WARNING notice until the indicated conditions are fully understood and met.

Contents

In This Book 7

1 Introduction 8

Overview of the Module 9
Product Description of the 1260 Infinity III Vialsampler (G7129A) 11
Features of the 1260 Infinity III Vialsampler (G7129A) 12
Product Description of the 1290 Infinity III Vialsampler (G7129B) 13
Features of the 1290 Infinity III Vialsampler (G7129B) 14
Product Description of the 1260 Infinity III Vialsampler (G7129C) 15
Features of the 1260 Infinity III Vialsampler (G7129C) 16
Operating Principle 17

2 Site Requirements and Specifications 23

Site Requirements 24
Specifications of the 1260 Infinity III Vialsampler (G7129A) 28
Specifications of the 1290 Infinity III Vialsampler (G7129B) 31
Specifications of the 1260 Infinity III Vialsampler (G7129C) 34
Specifications of the Sample Thermostat 37
Specifications of the Integrated Column Compartment 39

3 Installation 41

Installing the Optional Integrated Column Compartment 42
Installing the Optional Sample Thermostat 76
Installing Capillaries 88
Install Flow Connections to the Vialsampler 92
Handling Leak and Waste 94

4 Using the Module 104

General Information 106
Preparation of the System 110
Preparing the Module 119
Preparing the Optional Integrated Column Compartment 145

Preparing the Optional Sample Thermostat 163
Transporting the Sampler 172

5 Optimizing the Performance of the Module 177
Optimization for Lowest Carryover 178
Fast Injection Cycle and Low Delay Volume 182
Precise Injection Volume 184
Choice of Rotor Seal 186

6 Diagnostics and Troubleshooting 187
Diagnostic Features 188
Maintenance and Troubleshooting Tools of the Module 190
Agilent Lab Advisor Software 201

7 Error Information 202
What Are Error Messages 204
General Error Messages 205
Vialsampler Error Messages 216
Sample Thermostat Error Messages 233
Integrated Column Compartment (ICC) Heater Error Messages 249

8 Maintenance 255
Safety Information Related to Maintenance 256
Introduction to Maintenance 258
Overview of Maintenance 259
Cleaning the Module 260
Remove and Install Doors 261
Exchange the Needle Assembly 264
Exchange the Needle Seat Assembly 273
Exchange the Sample Loop Assembly 282
Exchange the Rotor Seal 288
Exchange the Metering Seal and Piston 295
Replace the Analytical Head 302
Exchange the Gripper Arm 306
Replace the Finger Caps 311

Replace the Peristaltic Pump Cartridge 313
Exchange the Wash Port Assembly 317
Replace the Module Firmware 326
Replace the Sample Thermostat 327

9 Parts and Materials for Maintenance 333
Standard Parts for Maintenance 335
Accessory Kits 339
Vial Drawers and Trays 342
Multidraw Kits 345
Sample Thermostat Upgrade Kit 346
Integrated Column Compartment 347
Column ID Upgrade Kit 348
Parts for 900 µL Injection Upgrade 349
Cabinet and Door Kits 350
Analytical Head Assembly (100 µL) 355
Analytical Head Assembly (900 µL) 356
Analytical Head Assembly (40 µL) 357
2 Position/6 Port Injection Valve, 600 bar 358
2 Position/6 Port Injection Valve, 800 bar 359
2 Position/6 Port Injection Valve, 1300 bar 360

10 Identifying Cables 361
Cable Overview 362
Analog Cables 364
Remote Cables 366
BCD Cables 370
CAN/LAN Cables 372
RS-232 Cables 373
USB 374

11 Hardware Information 375
General Hardware Information 376
Module-Specific Hardware Information 390

12 Appendix 397
General Safety Information 398
Material Information 407
At-a-Glance Details About Agilent Capillaries 413
Waste Electrical and Electronic Equipment (WEEE) Directive 417
Radio Interference 418
RFID Statement 419
Sound Emission 421
Agilent Technologies on Internet 422

In This Book

This manual covers the following Agilent InfinityLab LC Series modules:

- Agilent 1260 Infinity III Vialsampler (G7129A)
- Agilent 1290 Infinity III Vialsampler (G7129B)
- Agilent 1260 Infinity III Vialsampler (G7129C)

1 Introduction

This chapter gives an introduction to the module and instrument overview.

Overview of the Module 9

Product Description of the 1260 Infinity III Vialsampler (G7129A) 11

Features of the 1260 Infinity III Vialsampler (G7129A) 12

Product Description of the 1290 Infinity III Vialsampler (G7129B) 13

Features of the 1290 Infinity III Vialsampler (G7129B) 14

Product Description of the 1260 Infinity III Vialsampler (G7129C) 15

Features of the 1260 Infinity III Vialsampler (G7129C) 16

Operating Principle 17
Sampling Sequence 17
Injection Sequence 18

Overview of the Module

The Agilent InfinityLab LC Series Vialsampler is designed for use with other modules of the Agilent InfinityLab LC Series, 1200 Series, and 1100 Series LC, as well as with other LC systems with adequate remote-control capabilities. The Vialsampler can be controlled from any computer with a suitable chromatography data system (for example, Agilent OpenLab CDS, MassHunter) or via an Agilent local control module (InfinityLab Companion or Agilent 1200 Infinity Instant Pilot).

The 1290 Infinity III Vialsampler (G7129B) can be operated at up to 1300 bar. The two 1260 Infinity III Vialsampler variants (G7129A and G7129C) are limited to a maximum system pressure of 600 and 800 bar, respectively.

The Vialsampler can accommodate two vial drawers, providing space for up to 132 samples. The two cartesian vial drawers allow for the use of either 66 × 2 mL or 18 × 6 mL vials. A pair of classic vial drawers with a numerical vial assignment system is also available, each capable of hosting 50 × 2 mL vials. The classic vial drawers are designed to ease method transfer from older Agilent samplers. The Vialsampler can also be equipped with an external tray, which can be beneficial for automation. The Agilent walk-up solution fully supports the external tray.

The Vialsampler features a robotic gripper arm for the transport of vials, driven by four stepper motors to ensure the highest precision and flexibility for the transport movement.

The default configuration of the analytical head and sample loop allows an injection range from 0.1 – 20 µL for the 1290 Infinity III Vialsampler and 0.1 – 100 µL for the 1260 Infinity III Vialsamplers. An analytical head with extended volume is also available for injection volumes from 0.1 – 900 µL, and can be operated at up to 400 bar. With the Multidraw Kit, the maximum injection volume can even reach 1800 µL.

The 2-position/6-port injection valve is driven by a high-speed, hybrid stepper motor, ensuring smooth switching between the main pass and bypass positions. Thanks to the flow-through design of the Vialsampler, the eluent continuously rinses the component parts of the sample introduction system. This, together with the automated needle wash function for rinsing the outer surface of the needle, ensures the lowest level of carry over for each analysis. For advanced delay volume reduction, the injection valve can be programmed to automatically switch back to the bypass position when the injection is completed.

The Agilent InfinityLab Integrated Column Compartment, an optional upgrade for the Vialsampler, eliminates the need for having a standalone column thermostat in the LC stack. It has the heating capability of reaching temperatures up to 80 °C and can hold a total of two columns with maximum lengths of 30 cm.

For applications requiring control over the vial temperature, the Vialsampler can be equipped with the Agilent InfinityLab Sample Thermostat. It features a vapor-compression refrigeration system and an electric heater, allowing the Vialsampler to reach vial temperatures down to 4 °C and up to 40 °C.

Product Description of the 1260 Infinity III Vialsampler (G7129A)

The Agilent 1260 Infinity III Vialsampler is an autosampler designed for the reliability and ease-of-use needed for routine pharmaceutical tasks and quality control, as well as for environmental and food analyses. It can house optionally the integrated column compartment for two LC columns with temperature control up to 80 °C as well as a sample thermostat for stable temperatures from 4 °C to 40 °C, all within one module.

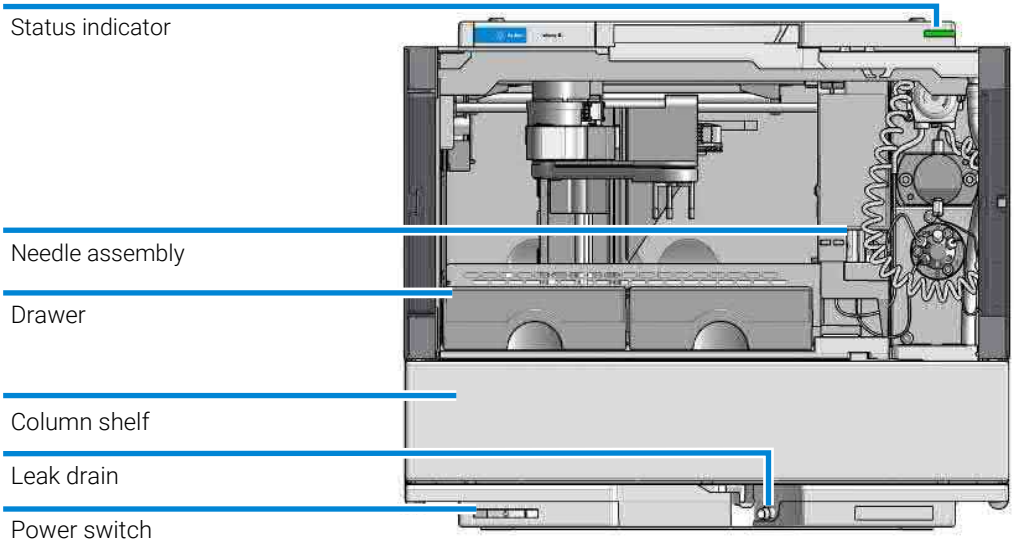

Figure 1: Overview of the Vialsampler

Features of the 1260 Infinity III Vialsampler (G7129A)

- *High capacity* – up to 132 vials (2 mL) or up to 36 vials (6 mL).
- *Reliable injections* – 0.1 to 100 µL injections for up to 600 bar (G7129A) and up to 800 bar (G7129C).
- *Easy volume extensions* – for injection volumes up to 1800 µL for applications ranging from microbore to semipreparative chromatography.
- *Lowest carryover* – with an in needle flush port included, for rinsing the outside of the needle.
- *Efficient temperature control* – with an integrated column compartment as option or upgrade available. Which holds two columns up to 30 cm length, and provides heating capacity from 5 °C above ambient up to 80 °C for reproducible chromatography data at optimized resolution.
- *Integrated sample thermostat* – available as option or upgrade, providing cooling and heating in the range from 4 °C - 40 °C.
- *Low internal volume* – for minimum contribution to a system's total internal volume, which can be even further reduced using "bypass" mode.
- *Increased productivity* – with overlapped injections.
- *Customizable injection program* – available for customizing advanced injections as well as for sample preparation steps upfront injection.

Product Description of the 1290 Infinity III Vialsampler (G7129B)

The Agilent 1290 Infinity III Vialsampler is an autosampler designed for UHPLC applications up to 1300 bar. It provides the reliability, safety, and ease-of-use needed for routine pharmaceutical tasks and quality control, as well as for environmental and food analyses. It can house optionally the integrated column compartment for two LC columns with temperature control up to 80 °C as well as a sample thermostat for stable temperatures from 4 °C to 40 °C, all within one module.

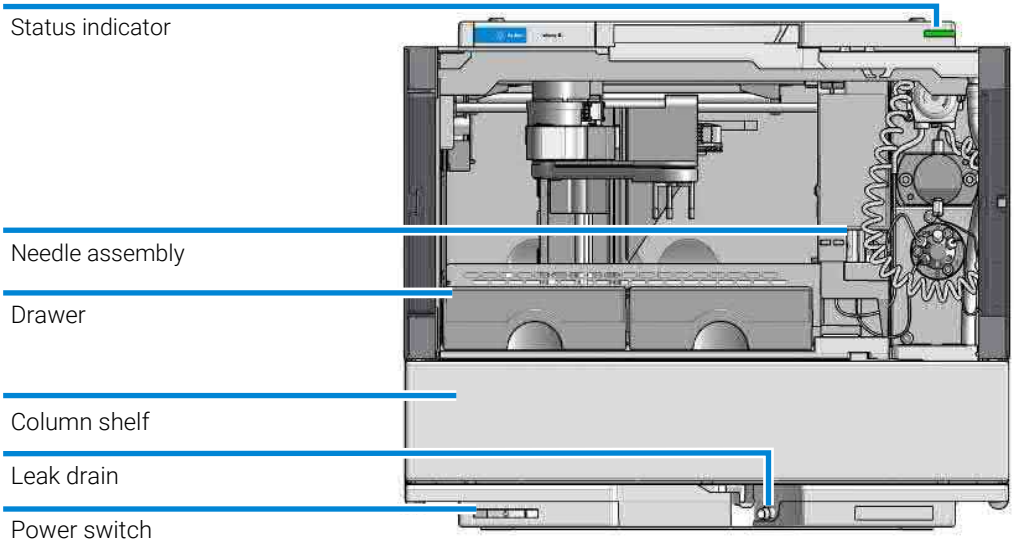

Figure 2: Overview of the Vialsampler

Features of the 1290 Infinity III Vialsampler (G7129B)

- *Accurate and precise injections* - within a wide and flexible range of volumes
- *High capacity* - up to 132 vials (2 mL) or up to 36 vials (6 mL).
- *Easy volume extensions* - for injection volumes up to 1500 µL for applications ranging from microbore to semipreparative chromatography.
- *Lowest carryover* - with an in needle flush port included, for rinsing the outside of the needle.
- *Efficient temperature control* - with an integrated column compartment as option or upgrade available. Which holds two columns up to 30 cm length, and provides heating capacity from 5 °C above ambient up to 80 °C for reproducible chromatography data at optimized resolution.
- *Integrated sample thermostat* - available as option or upgrade, providing cooling and heating in the range from 4 – 40 °C.
- *Low internal volume* - for minimum contribution to a system's total internal volume, which can be even further reduced using bypass mode.
- *Increased productivity* - with overlapped injections.
- *Customizable Injection program* - available for customizing advanced injections as well as for sample preparation steps upfront injection.

Product Description of the 1260 Infinity III Vialsampler (G7129C)

The Agilent 1260 Infinity III Vialsampler is an autosampler designed for the reliability and ease-of-use needed for routine pharmaceutical tasks and quality control, as well as for environmental and food analyses. It can house optionally the integrated column compartment for two LC columns with temperature control up to 80 °C as well as a sample thermostat for stable temperatures from 4 °C to 40 °C, all within one module.

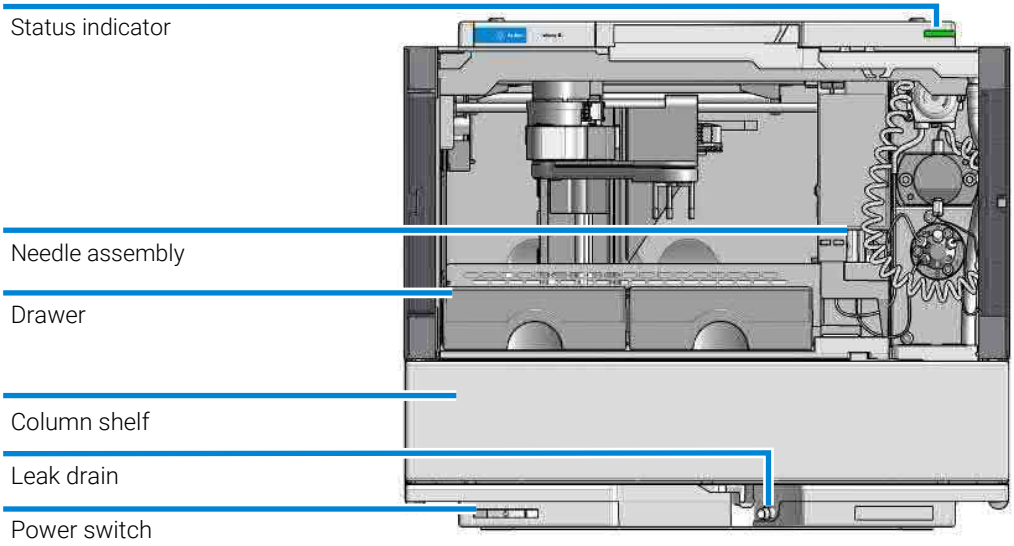

Figure 3: Overview of the Vialsampler

Features of the 1260 Infinity III Vialsampler (G7129C)

- *High capacity* – up to 132 vials (2 mL) or up to 36 vials (6 mL).
- *Reliable injections* – 0.1 to 100 µL injections for up to 600 bar (G7129A) and up to 800 bar (G7129C).
- *Easy volume extensions* – for injection volumes up to 1800 µL for applications ranging from microbore to semipreparative chromatography.
- *Lowest carryover* – with an in needle flush port included, for rinsing the outside of the needle.
- *Efficient temperature control* – with an integrated column compartment as option or upgrade available. Which holds two columns up to 30 cm length, and provides heating capacity from 5 °C above ambient up to 80 °C for reproducible chromatography data at optimized resolution.
- *Integrated sample thermostat* – available as option or upgrade, providing cooling and heating in the range from 4 °C - 40 °C.
- *Low internal volume* – for minimum contribution to a system's total internal volume, which can be even further reduced using "bypass" mode.
- *Increased productivity* – with overlapped injections.
- *Customizable injection program* – available for customizing advanced injections as well as for sample preparation steps upfront injection.

Operating Principle

Sampling Sequence

The Vialsampler processor continuously monitors the movements of the vialsampler components during the sampling sequence. The processor defines specific time windows and mechanical ranges for each movement. If a specific step of the sampling sequence can't be completed successfully, an error message is generated.

During the sampling sequence, the solvent bypasses the vialsampler via the injection valve. The gripper arm selects the sample vial, either from a static sample rack, or from external vial positions. The gripper arm places the sample vial below the injection needle. The required volume of sample is drawn into the sample loop by the metering device. Sample is applied to the column when the injection valve returns to the mainpass (main path) position at the end of the sampling sequence.

The sampling sequence occurs in the following order:

1. The injection valve switches to the bypass position.
2. The piston of the metering device moves to the initialization position.
3. The gripper arm moves from the home position, and selects the vial. At the same time, the needle lifts out of the seat.
4. The gripper moves into the needle station and stops in the draw position. [1]
5. The needle lowers into the vial.
6. The metering device draws the defined sample volume.
7. The needle lifts out of the vial.
8. The gripper arm moves out slightly and stops in the wash position [1].
9. The needle moves downwards and dips into the wash well of the wash port. Simultaneously the peristaltic pump delivers the flush solvent. [1]
10. The needle moves back. [1]

1 Only if automated needle wash is selected. If this feature is disabled, the gripper arm positions the sample vial directly below the needle (Step 4) and lowers the needle into the vial.

11. The gripper arm moves out of the needle station and the wash port snaps back in position.
12. The gripper arm replaces the vial, and returns to the home position. Simultaneously, the needle lowers into the seat.
13. The injection valve switches to the mainpass (main path) position.

Injection Sequence

Before the start of the injection sequence, and during an analysis, the injection valve is in the mainpass (main path) position (see Figure 4 on page 18). In this position, the mobile phase flows through the autosampler's metering device, sample loop, and needle. This ensures that all parts in contact with the sample are flushed during the run, thus minimizing carryover.

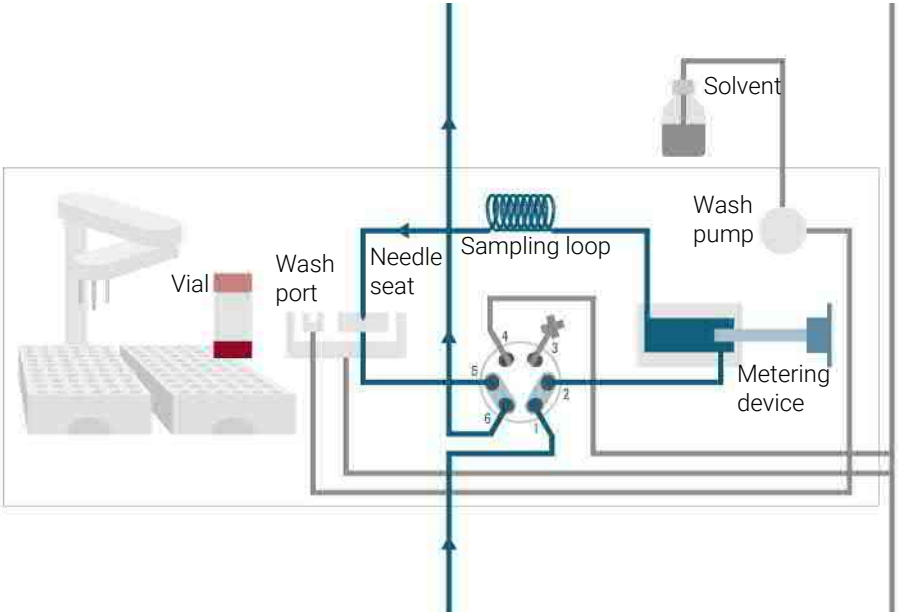

Figure 4: Mainpass (main path) Position - standard position during runs and when the sampler is idle

When the sample sequence begins, the valve unit switches to the bypass position (see Figure 5 on page 19). The solvent from the pump enters the valve unit at port 1 and flows directly to the column through port 6. Then, the metering piston returns to its home position, ejecting the excess liquid into the waste through port 4.

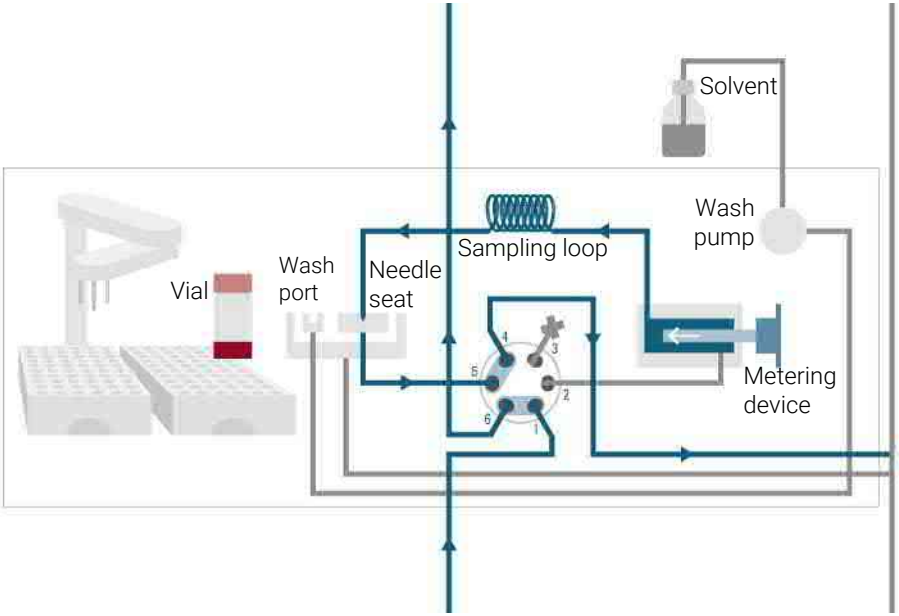

Figure 5: Valve in bypass - needle in needle seat, metering device ejects the excess liquid

Next, the vial is positioned by the gripper arm below the needle. The needle moves down into the vial, and the metering unit draws the required sample volume into the loop (see Figure 6 on page 20). Then, the needle lifts, and the metering unit draws a 0.7 µL air plug into the needle tip to prevent sample loss during needle washing.

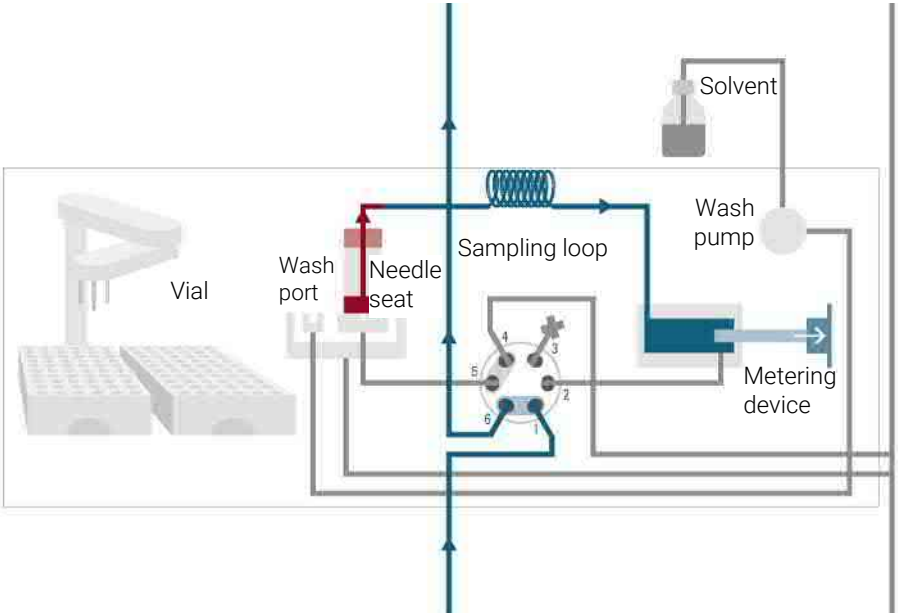

Figure 6: Valve in bypass - needle in vial, metering device aspirates sample volume

After drawing the sample, the vial is returned to the sample tray. Then, the needle moves into the wash port, where a fresh stream of wash solvent rinses its outer surface (see Figure 7 on page 21).

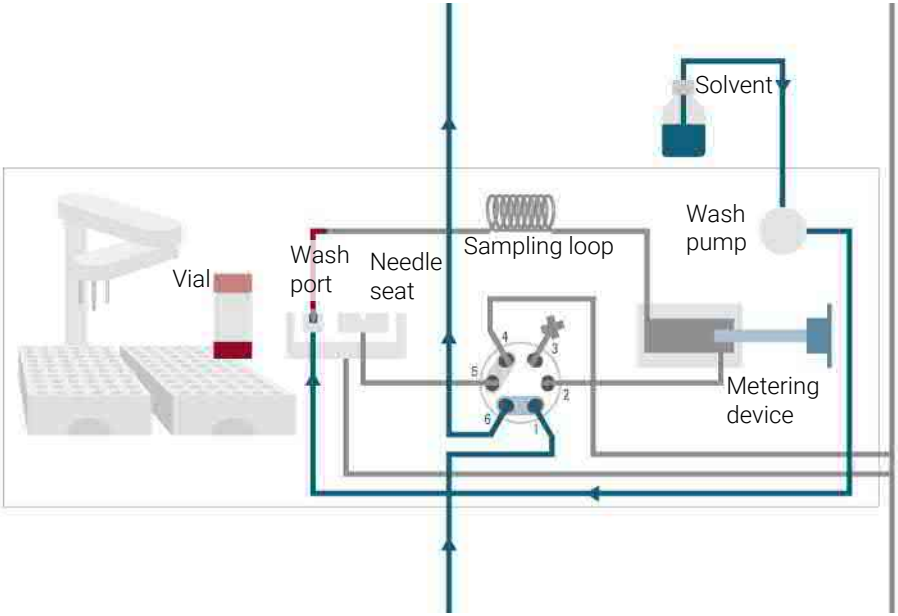

Figure 7: Outer face of needle getting washed in wash port

After washing, the needle leaves the wash port and moves into the needle seat. Finally, the injection valve switches back to the mainpass (main path) position, flushing the sample onto the column (see Figure 8 on page 22).

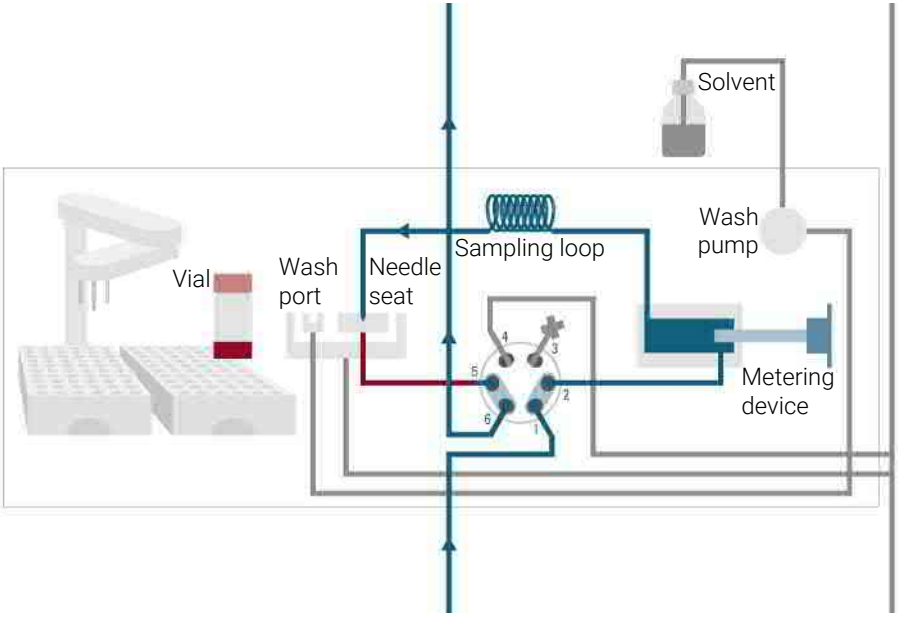

Figure 8: Valve switches to mainpass (main path) - sample is transferred towards the LC column

2 Site Requirements and Specifications

This chapter provides information on environmental requirements, physical and performance specifications.

Site Requirements 24
Power Considerations 24
Power Cords 25
Room Size and Ventilation 26
Bench Space 26
Condensation 27

Specifications of the 1260 Infinity III Vialsampler (G7129A) 28

Specifications of the 1290 Infinity III Vialsampler (G7129B) 31

Specifications of the 1260 Infinity III Vialsampler (G7129C) 34

Specifications of the Sample Thermostat 37

Specifications of the Integrated Column Compartment 39

Site Requirements

A suitable environment is important to ensure optimum performance of the instrument.

Power Considerations

The module power supply has wide ranging capability. It accepts any line voltage in the range described in Table 1 on page 28, Table 3 on page 31, or Table 5 on page 34. Consequently there is no voltage selector in the rear of the module. There are also no externally accessible fuses, because automatic electronic fuses are implemented in the power supply.

WARNING

Inaccessible power plug.

In case of emergency it must be possible to disconnect the instrument from the power line at any time.

- **Make sure the power connector of the instrument can be easily reached and unplugged.**
- **Provide sufficient space behind the power socket of the instrument to unplug the cable.**

WARNING

Incorrect line voltage at the module

Shock hazard or damage of your instrument can result if the devices are connected to line voltage higher than specified.

- **Connect your module to the specified line voltage.**

WARNING

Module is partially energized when switched off, as long as the power cord is plugged in.

Repair work at the module can lead to personal injuries, e.g. shock hazard, when the cover is opened and the module is connected to power.

- **Make sure that it is always possible to access the power plug.**
- **Remove the power cable from the instrument before opening the cover.**
- **Do not connect the power cable to the Instrument while the covers are removed.**

Power Cords

Country-specific power cords are available for the module. The female end of all power cords is identical. It plugs into the power-input socket at the rear. The male end of each power cord is different and designed to match the wall socket of a particular country or region.

Agilent makes sure that your instrument is shipped with the power cord that is suitable for your particular country or region.

WARNING

Unintended use of power cords

Using power cords for unintended purposes can lead to personal injury or damage of electronic equipment.

- **Never use a power cord other than the one that Agilent shipped with this instrument.**
- **Never use the power cords that Agilent Technologies supplies with this instrument for any other equipment.**
- **Never use cables other than the ones supplied by Agilent Technologies to ensure proper functionality and compliance with safety or EMC regulations.**

WARNING

Absence of ground connection

The absence of ground connection can lead to electric shock or short circuit.

- **Never operate your instrumentation from a power outlet that has no ground connection.**

WARNING

Electrical shock hazard

Solvents may damage electrical cables.

- **Prevent electrical cables from getting in contact with solvents.**
- **Exchange electrical cables after contact with solvents.**

Room Size and Ventilation

WARNING

Flammable refrigerant

Formation of flammable gas-air mixtures inside the Sample Thermostat and laboratory.

- **Keep open fire or sources of ignition away from the device.**
- **Ensure a room size of 4 m^3 (1 m^3 for every 8 g of R600a refrigerant inside of the Sample Thermostat).**
- **Ensure adequate ventilation: typical air exchange of 25 m^3/h per m^2 of laboratory floor area.**
- **Keep all ventilation openings in the enclosure clear of obstructions. Do not block the openings on the circumference of the Sample Thermostat.**

Bench Space

The module dimensions and weight (see Table 1 on page 28) allow you to place the module on almost any desk or laboratory bench. It needs an additional 2.5 cm (1.0 inches) of space on either side and approximately 8 cm (3.1 inches) in the rear for air circulation and electric connections

If the bench shall carry a complete HPLC system, make sure that the bench is designed to bear the weight of all modules.

The module should be operated in a horizontal position, especially if a Sample Thermostat is installed. Use a bubble level to check the leveling of the sampler.

NOTE

Agilent recommends that you install the HPLC instrument in the InfinityLab Flex Bench rack. This option helps to save bench space as all modules can be placed into one single stack. It also allows to easily relocate the instrument to another lab.

WARNING

Heavy weight

The module is heavy.

- **Carry the module at least with 2 people.**
- **Avoid back strain or injury by following all precautions for lifting heavy objects.**
- **Ensure that the load is as close to your body as possible.**
- **Ensure that you can cope with the weight of your load.**

Condensation

CAUTION

Condensation within the module

Condensation can damage the system electronics.

- Do not store, ship or use your module under conditions where temperature fluctuations could cause condensation within the module.
- If your module was shipped in cold weather, leave it in its box and allow it to warm slowly to room temperature to avoid condensation.

Specifications of the 1260 Infinity III Vialsampler (G7129A)

Table 1: Physical specifications of the 1260 Infinity III Vialsampler (G7129A)

Type	Specification	Comments
Weight	19 kg (41.9 lbs)	w/o sample thermostat
Dimensions (height × width × depth)	320 x 396 x 468 mm (12.8 x 15.6 x 18.4 inches)	
Line voltage	100–240 V~, ±10%	Wide-ranging capability
Line frequency	50 or 60 Hz, ±5%	
Power consumption	350 VA, 350 W, 1195 BTU/h	
Ambient operating temperature	4–40 °C (39–104 °F); without sample thermostat up to 55 °C (131 °F)	
Ambient non-operating temperature	-40–70 °C (-40–158 °F)	
Humidity	< 95% r.h. at 40 °C (104 °F) [2]	Non-condensing
Operating altitude	Up to 3000 m (9842 ft)	
Safety standards: IEC, EN, CSA, UL	Overvoltage category II, Pollution degree 2	For indoor use only
ISM Classification	ISM Group 1 Class B	According to CISPR 11
Permitted solvents	Boiling point ≥ 56 °C (133 °F) Auto-ignition temperature ≥ 200 °C (392 °F)	

2 If a sample thermostat is included the upper value for humidity can be reduced. Please check your lab conditions to stay beyond dew point values for non–condensing operation.

Table 2: Performance specifications of the 1260 Infinity III Vialsampler (G7129A)

Type	Specification	Comments
Designed for use with Agilent InfinityLab Assist	Intuitive User Interface, Automated Workflows, Predictive Maintenance & Assisted Troubleshooting	
Injection range	0.1 – 100 µL in 0.1 µL increments with 100 µL up to 60 MPa 0.1 – 900 µL in 0.1 µL increments with 900 µL up to 40 MPa	Up to 1800 µL with multiple draw (hardware modification required) Requires 900 µL analytical head
Injection precision	< 0.25 % RSD of peak areas from 5 µL to 100 µL	Measured caffeine
Pressure range	0 – 60 MPa (0 – 600 bar, 0 – 8702 psi) 0 – 40 MPa (0 – 400 bar, 0 – 5801 psi)	for 900 µL Analytical Head
Sample viscosity range	0.2 – 5.0 cP	
Sample capacity	132 x 2 mL vial (two trays default) 100 x 2 mL vial (two classic trays optional) 36 x 6 mL vials (two trays optional)	
Carryover	< 0.004 % (40 ppm) with needle wash	Sample: Chlorhexidine
Injection cycle time	18 s for draw speed 200 µL/min Ejection speed: 200 µL/min Injection volume: 1 µL	
Minimum sample volume	1 µL from 5 µL sample in 100 µL microvial, or 1 µL from 10 µL sample in 300 µL microvial.	Needle height offset has to be adapted to ensure that needle doesn't touch vial bottom. Default needle height = 0 equates to 2 mm above the vial bottom.
Instrument Control	LC & CE Drivers A.02.12 or above Instrument Control Framework (ICF) A.02.03 or above Lab Advisor B.02.07 or above InfinityLab Assist (G7180A) with firmware D.07.40 or above Instant Pilot (G4208A) with firmware B.02.19 or above	For details about supported software versions refer to the compatibility matrix of your version of the LC & CE Drivers
Communication	Controller Area Network (CAN),Local Area Network (LAN) ERI: ready, start, stop and shut-down signals	

Type	Specification	Comments
Maintenance and safety-related features	Extensive diagnostics, error detection and display with Agilent InfinityLab Assist or with Agilent Lab Advisor software Leak detection, safe leak handling, leak output signal for shutdown of pumping system, and low voltages in major maintenance areas	
GLP features	Early maintenance feedback (EMF) for continuous tracking of instrument usage with user-settable limits and feedback messages. Electronic records of maintenance and errors.	
Housing	All materials recyclable.	

Specifications of the 1290 Infinity III Vialsampler (G7129B)

Table 3: Physical specifications of the 1290 Infinity III Vialsampler (G7129B)

Type	Specification	Comments
Weight	19 kg (41.9 lbs)	w/o sample thermostat
Dimensions (height × width × depth)	320 x 396 x 468 mm (12.8 x 15.6 x 18.4 inches)	
Line voltage	100–240 V~, ±10%	Wide-ranging capability
Line frequency	50 or 60 Hz, ±5%	
Power consumption	350 VA, 350 W, 1195 BTU/h	
Ambient operating temperature	4–40 °C (39–104 °F); without sample thermostat up to 55 °C (131 °F)	
Ambient non-operating temperature	-40–70 °C (-40–158 °F)	
Humidity	< 95% r.h. at 40 °C (104 °F) [3]	Non-condensing
Operating altitude	Up to 3000 m (9842 ft)	
Safety standards: IEC, EN, CSA, UL	Overvoltage category II, Pollution degree 2	For indoor use only
ISM Classification	ISM Group 1 Class B	According to CISPR 11
Permitted solvents	Boiling point ≥ 56 °C (133 °F) Auto-ignition temperature ≥ 200 °C (392 °F)	

3 If a sample thermostat is included the upper value for humidity can be reduced. Please check your lab conditions to stay beyond dew point values for non–condensing operation.

Table 4: Performance specifications of the 1290 Infinity III Vialsampler (G7129B)

Type	Specification	Comments
Designed for use with Agilent InfinityLab Assist	Intuitive User Interface, Automated Workflows, Predictive Maintenance & Assisted Troubleshooting	
Injection range	0.1 – 20 µL in 0.1 µL increments (default) 0.1 – 40 µL in 0.1 µL increments (if 40 µL loop is installed) 0.1 – 120 µL in 0.1 µL increments with 1290 Infinity large volume injection kit (hardware modification required if 40 µL loop and 40 µL head is installed) 0.1 – 100 µL in 0.1 µL (if 100 µL loop and 100 µL head is installed)	Up to 1500 µL (with 1400 µL multi-draw kit and 100 µL analytical head) up to 130 MPa (1300 bar, 18854 psi) up to 80 MPa (800 bar, 11603 psi)
Injection precision	< 0.25 % RSD of peak areas from 5 µL to 100 µL	Measured caffeine
Pressure range	Up to 130 MPa (1300 bar, 18854 psi)	
Sample viscosity range	0.2 – 5.0 cP	
Sample capacity	132 x 2 mL vial (two trays default) 100 x 2 mL vial (two classic trays optional) 36 x 6 mL vials (two trays optional)	
Carryover	< 0.004 % (40 ppm) with needle wash	Sample: Chlorhexidine
Injection cycle time	18 s for draw speed 200 µL/min Ejection speed: 200 µL/min Injection volume: 1 µL	
Minimum sample volume	1 µL from 5 µL sample in 100 µL microvial, or 1 µL from 10 µL sample in 300 µL microvial.	Needle height offset has to be adapted to ensure that needle doesn't touch vial bottom. Default needle height = 0 equates to 2 mm above the vial bottom.
Instrument control	LC & CE Drivers A.02.12 or above Instrument Control Framework (ICF) A.02.03 or above Lab Advisor B.02.07 or above InfinityLab Assist (G7180A) with firmware D.07.40 or above Instant Pilot (G4208A) with firmware B.02.19 or above	For details about supported software versions refer to the compatibility matrix of your version of the LC & CE Drivers

Type	Specification	Comments
Communication	Controller Area Network (CAN), Local Area Network (LAN), ERI: ready, start, stop and shut-down signals	
Maintenance and safety-related features	Extensive diagnostics, error detection and display with Agilent InfinityLab Assist or with Agilent Lab Advisor software Leak detection, safe leak handling, leak output signal for shutdown of pumping system, and low voltages in major maintenance areas	
GLP features	Early maintenance feedback (EMF) for continuous tracking of instrument usage with user-settable limits and feedback messages. Electronic records of maintenance and errors.	
Housing	All materials recyclable.	

Specifications of the 1260 Infinity III Vialsampler (G7129C)

Table 5: Physical specifications of the 1260 Infinity III Vialsampler (G7129C)

Type	Specification	Comments
Weight	19 kg (41.9 lbs)	w/o sample thermostat
Dimensions (height × width × depth)	320 x 396 x 468 mm (12.8 x 15.6 x 18.4 inches)	
Line voltage	100–240 V~, ±10%	Wide-ranging capability
Line frequency	50 or 60 Hz, ±5%	
Power consumption	350 VA, 350 W, 1195 BTU/h	
Ambient operating temperature	4–40 °C (39–104 °F); without sample thermostat up to 55 °C (131 °F)	
Ambient non-operating temperature	-40–70 °C (-40–158 °F)	
Humidity	< 95% r.h. at 40 °C (104 °F) [4]	Non-condensing
Operating altitude	Up to 3000 m (9842 ft)	
Safety standards: IEC, EN, CSA, UL	Overvoltage category II, Pollution degree 2	For indoor use only
ISM Classification	ISM Group 1 Class B	According to CISPR 11
Permitted solvents	Boiling point ≥ 56 °C (133 °F) Auto-ignition temperature ≥ 200 °C (392 °F)	

4 If a sample thermostat is included the upper value for humidity can be reduced. Please check your lab conditions to stay beyond dew point values for non–condensing operation.

Table 6: Performance specifications of the 1260 Infinity III Vialsampler (G7129C)

Type	Specification	Comments
Designed for use with Agilent InfinityLab Assist	Intuitive User Interface, Automated Workflows, Predictive Maintenance & Assisted Troubleshooting	
Injection range	0.1 – 100 µL in 0.1 µL increments with 100 µL up to 80 MPa	Up to 1800 µL with multiple draw (hardware modification required)
Injection precision	< 0.25 % RSD of peak areas from 5 µL to 100 µL	Measured caffeine
Pressure range	0 – 80 MPa (0 – 800 bar, 0 – 11603 psi)	
Sample viscosity range	0.2 – 5.0 cP	
Sample capacity	132 x 2 mL vial (two trays default) 100 x 2 mL vial (two classic trays optional) 36 x 6 mL vials (two trays optional)	
Carryover	< 0.004 % (40 ppm) with needle wash	Sample: Chlorhexidine
Injection cycle time	18 s for draw speed 200 µL/min Ejection speed: 200 µL/min Injection volume: 1 µL	
Minimum sample volume	1 µL from 5 µL sample in 100 µL microvial, or 1 µL from 10 µL sample in 300 µL microvial.	Needle height offset has to be adapted to ensure that needle doesn't touch vial bottom. Default needle height = 0 equates to 2 mm above the vial bottom.
Instrument Control	LC & CE Drivers A.02.17 or above Instrument Control Framework (ICF) A.02.05 or above Lab Advisor B.02.10 or above InfinityLab Assist (G7180A) with firmware D.07.40 or above Instant Pilot (G4208A) with firmware B.02.22 or above	For details about supported software versions refer to the compatibility matrix of your version of the LC & CE Drivers

Type	Specification	Comments
Communication	Controller Area Network (CAN), Local Area Network (LAN), ERI: ready, start, stop and shut-down signals	
Maintenance and safety-related features	Extensive diagnostics, error detection and display with Agilent InfinityLab Assist or with Agilent Lab Advisor software Leak detection, safe leak handling, leak output signal for shutdown of pumping system, and low voltages in major maintenance areas	
GLP features	Early maintenance feedback (EMF) for continuous tracking of instrument usage with user-settable limits and feedback messages. Electronic records of maintenance and errors.	
Housing	All materials recyclable.	

Specifications of the Sample Thermostat

The Agilent InfinityLab Sample Thermostat is the combination of an electric heater and a vapor-compression refrigeration system. It uses isobutane as a non-Freon refrigerant, which is harmless to the environment and does not affect the ozone layer and global warming, but it is combustible. Please adhere to the warnings listed in the manual.

Table 7: Physical specifications of the Sample Thermostat (G7167-60201)

Type	Specification	Comments
Weight	< 6 kg (< 13.2 lbs)	
Dimensions (height x width x depth)	205 x 340 x 370 mm (8.1 x 13.4 x 14.6 inches)	
Refrigerant gas	R600a (max. 0.030 kg)	Ozone depletion potential (ODP) =0 Global warming potential (GWP) =3
Supply voltage	24 VDC	
Current	10 A max.	
Ambient operating temperature	4 °C to 40 °C (39 °F to 104 °F)	For sample cooling, ambient temperature ≥10 °C
Ambient non-operating temperature	-40 °C to +70 °C (-40 °F to +158 °F)	
Humidity	< 95 % r.h. at 40 °C (104 °F)	Non-condensing
Operating altitude	Up to 3000 m (9842 ft)	
Safety standards: IEC, EN, CSA, UL	Pollution degree 2	For indoor use only
ISM Classification	ISM Group 1 Class B	According to CISPR 11

CAUTION

General hazards and improper disposal

Improper disposal of the media and components used pollutes the environment.

- The disposal or scrapping of the Sample Thermostat must be carried out by a qualified disposal company.
- All media must be disposed of in accordance with national and local regulations.
- Please contact your local Agilent Service Center in regard to safe environmental disposal of the appliance or check www.agilent.com for more info.

Table 8: Performance specifications of the Sample Thermostat (G7167-60201)

Type	Specifications
Operating principle	High performance, low-energy consumption micro-compressor based cooler with natural R600a coolant (Isobutane max. 0.030 kg), user-upgradable
Temperature range	from 4 °C to 40 °C
Temperature settable	from 4 °C to 40 °C in 1 ° increments
Temperature accuracy (<25 °C, <50 % r.H.)	2 °C to 6 °C at a setpoint of 4 °C

Table 9: Minimum system requirements for the G7167-60201 Sample Thermostat

Type	Specification
LC & CE Drivers	A.02.14, (A.02.18) [5] or above
Instrument Control Framework (ICF)	A.02.04, (A.02.05) [5] or above
Lab Advisor Software	2.19 or above
Firmware	D.07.37 or above

5 Minimum version for full thermostat functionality.

Specifications of the Integrated Column Compartment

Table 10: Physical specifications (G7130A)

Type	Specification	Comments
Weight	1.8 kg (4.0 lbs)	
Dimensions (height x width x depth)	86.5 x 396.0 x 106.5 mm (3.4 x 15.6 x 4.2 inches)	Maximum outside
Supply Voltage	24 V DC	
Power consumption	110 W	
Ambient operating temperature	4 – 55 °C (39 – 131 °F)	
Ambient non-operating temperature	-40 – 70 °C (-40 – 158 °F)	
Humidity	< 95 % r.h. at 40 °C (104 °F) [6]	Non-condensing
Operating altitude	Up to 3000 m (9842 ft)	
Safety standards IEC, EN, CSA, UL	Overvoltage Category II (in combination with the end-use product), Pollution degree 2	For indoor use only
ISM Classification	ISM Group 1 Class B	According to CISPR 11

Table 11: Performance specifications (G7130A)

Type	Specification	Comments
Designed for use with Agilent InfinityLab Assist	Intuitive User Interface, Automated Workflows, Predictive Maintenance & Assisted Troubleshooting	
Temperature range	5 °C above ambient to 80 °C	
Column capacity	2 columns up to 30 cm and 4.6 mm ID	

6 If a sample thermostat is included the upper value for humidity can be reduced. Please check your lab conditions to stay beyond dew point values for non–condensing operation.

Type	Specification	Comments
Temperature stability	± 0.10 °C	at sensor
Temperature accuracy	± 0.8 K (±0.5 K with calibration)	
Warm up time	20 – 40 °C in 5 min	at sensor

3 Installation

The installation of the module will be done by an Agilent service representative. In this chapter, only installation of user-installable options and accessories are described.

Installing the Optional Integrated Column Compartment 42
Unpacking the Unit 42
Install the Integrated Column Compartment 43
Install a Column in the ICC 52
Remove a Column From the ICC 59
Install the Column Shelf 63
Install the Column ID Upgrade Kit 69
Connect a Column Identification Tag to the Tag Reader 72

Installing the Optional Sample Thermostat 76
Unpacking the Unit 76
Install the Sample Thermostat 77

Installing Capillaries 88
Install Capillaries 88

Install Flow Connections to the Vialsampler 92

Handling Leak and Waste 94
Drain Connectors Installation 97
Waste Concept 102
Waste Guidance 102
Leak Sensor 103

Installing the Optional Integrated Column Compartment

Unpacking the Unit

Damaged Packaging

If the delivery packaging shows signs of external damage, please call your Agilent Technologies sales and service office immediately. Inform your service representative that the instrument may have been damaged during shipment.

CAUTION

"Defective on arrival" problems

If there are signs of damage, please do not attempt to install the module. Inspection by Agilent is required to evaluate if the instrument is in good condition or damaged.

- Notify your Agilent sales and service office about the damage.
- An Agilent service representative will inspect the instrument at your site and initiate appropriate actions.

Condensation

CAUTION

Condensation within the module

Condensation can damage the system electronics.

- Do not store, ship or use your module under conditions where temperature fluctuations could cause condensation within the module.
- If your module was shipped in cold weather, leave it in its box and allow it to warm slowly to room temperature to avoid condensation.

Delivery checklist

Ensure all parts and materials have been delivered with your module. The delivery checklist is shown below. For parts identification please check the illustrated parts breakdown in Integrated Column Compartment on page 347. Please report any missing or damaged parts to your local Agilent Technologies sales and service office.

Table 12: Delivery checklist for the Integrated Column Compartment (ICC)

Description	Quantity
Integrated Column Compartment (G7130-60030 or G7130-60060)	1
Accessory Kit for ICC	1

Install the Integrated Column Compartment

Tools required

Qty.	p/n	Description
2	8710-0510	Open-end wrench 1/4-5/16 inch

Parts required

Qty.	p/n	Description
1	G7130-60030	Integrated Column Compartment , 3 µL Heater, **OR**
1	G7130-60060	Integrated Column Compartment , 6 µL Heater
1		Accessory Kit for ICC (provided with the ICC, includes capillaries and column holder clips)

For more information on recommended capillary types, see Capillary Connections on page 337.

Preparations

- Finish any pending acquisition job.
- Stop the flow at the pump and remove the solvent lines from the eluent bottles to avoid spilling solvent.
- Close the shutoff valves at the pump if available.
- Switch off the sampler and disconnect it from the power supply.
- Open the doors of the sampler.

WARNING

Fire or explosion due to missing leak drainage

Solvents may run into the module if column shelf or Integrated Column Compartment are not installed.

— **Install either column shelf or Integrated Column Compartment before starting the module.**

NOTE

Plug the ports that are not in use with a blank nut to prevent dust from entering the ICC.

1 Remove the column shelf.

a Press in the release buttons on the left and right side.

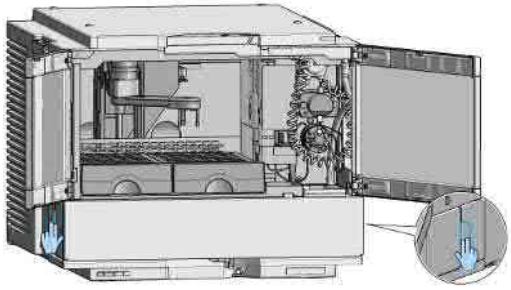

b Pull out the column shelf.

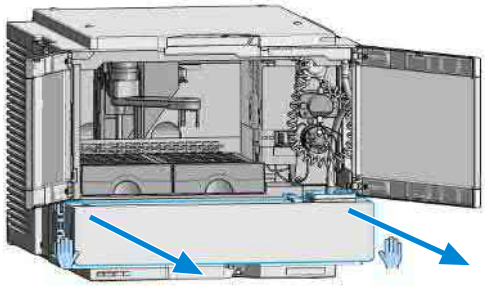

The column shelf is removed.

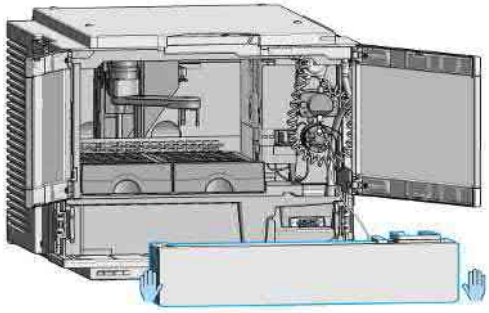

2 Install the Integrated Column Compartment.

a Push in the Integrated Column Compartment.

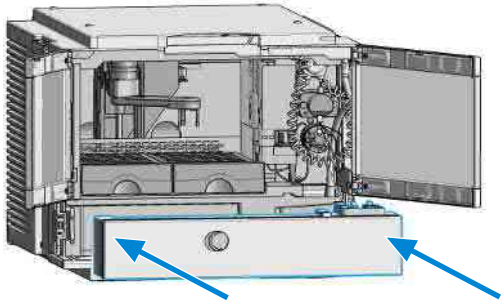

b Ensure that the release buttons are clicked back in their original position.

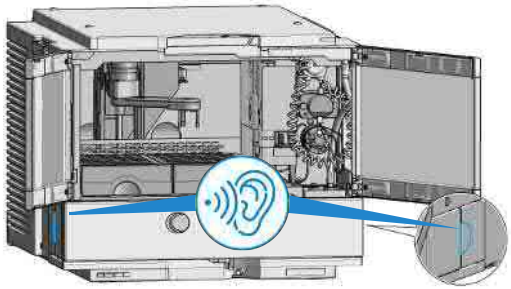

The Integrated Column Compartment is installed.

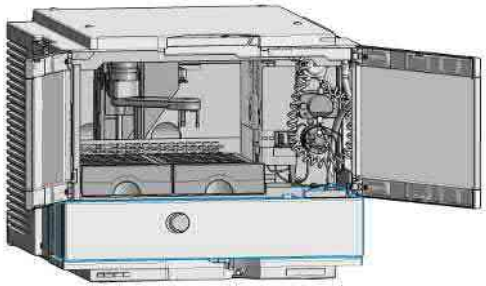

3 Push the latch of the Integrated Column Compartment to the left.

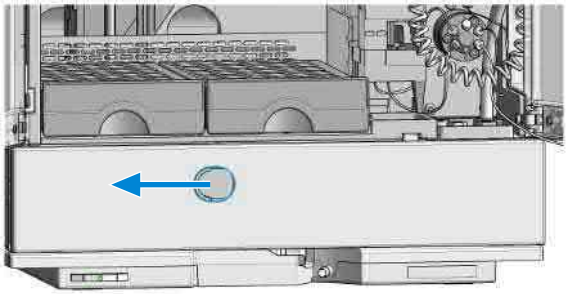

4 Open the flap door.

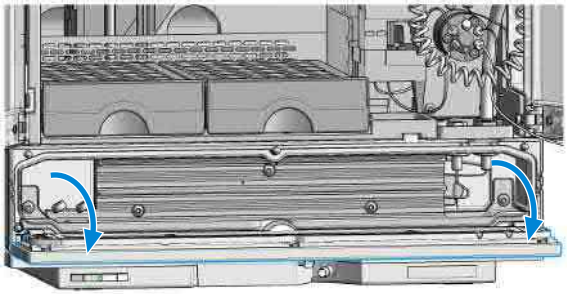

5 Connect the injector valve (port 6) of the Vialsampler to the inlet port of the ICC heat exchanger with a suitable capillary (see Capillary Connections on page 337 for recommendations).

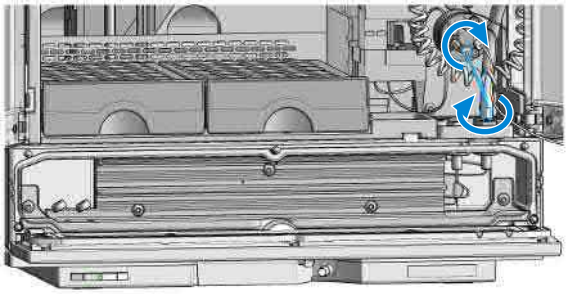

6 Connect a suitable capillary to the respective outlet port of the ICC heat exchanger (see Capillary Connections on page 337 for recommendations).

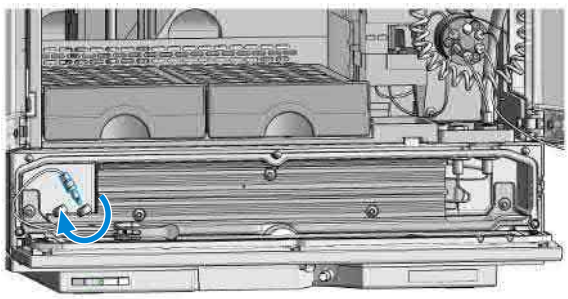

7 Tighten the capillary fitting to make the connection pressure tight.

NOTE Do not overtighten the fitting (maximum torque 2.5 Nm).

NOTE The use of capillaries with SL or SX fittings are recommended for a better handling.

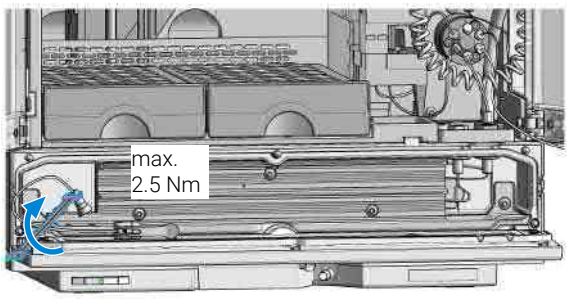

8 Mount the column holders on the heat exchanger.

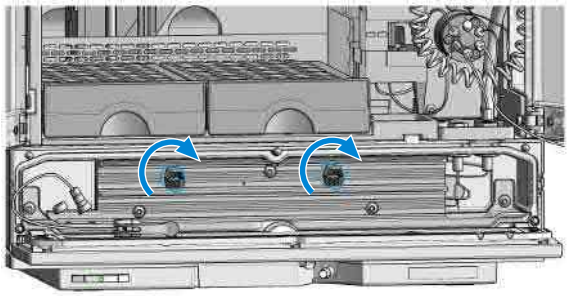

9 Connect the column to the free end of the capillary coming from the ICC heat exchanger. For best performance, use capillaries with the InfinityLab Quick Connect Fitting.

a Turn the column onto the Quick Connect Fitting until the first resistance is observed.

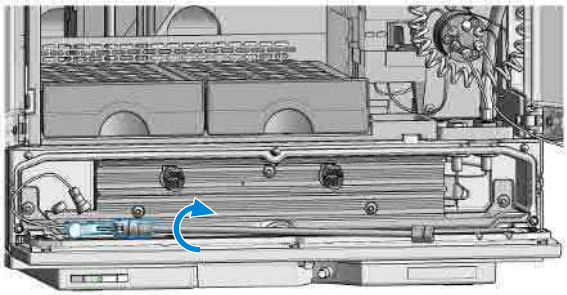

b Close the lever to establish a pressure tight connection.

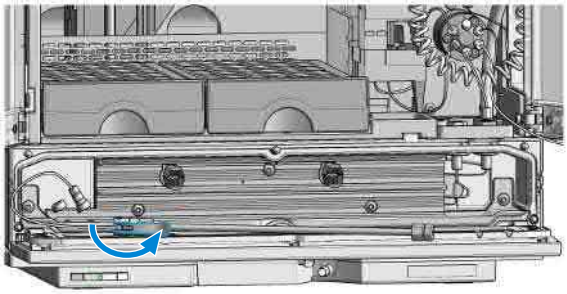

10 Connect a suitable capillary to the outlet port of the column. For best performance, use capillaries with the InfinityLab Quick Turn Fitting.

a Connect the capillary with the Quick Connect Fitting and tighten it until finger-tightness.

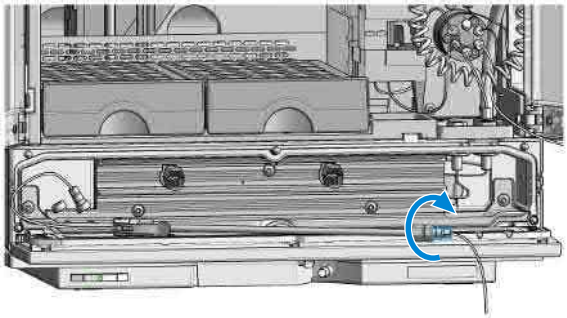

The fitting should be pressure tight up to 600 bar.

b If needed, tighten the fitting further with the help of two suitable wrenches.

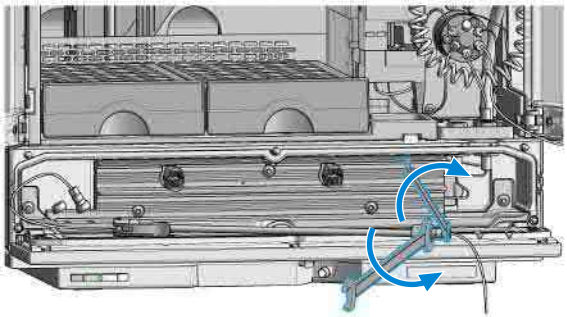

11 Mount the column in the column holder clip(s).

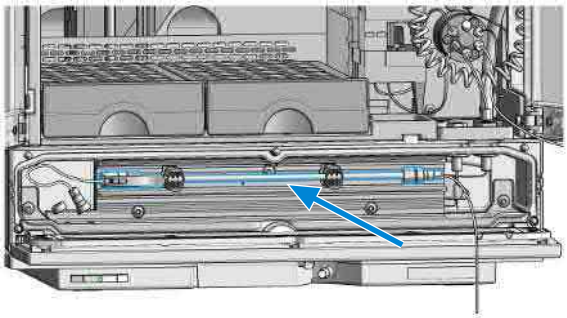

12 Route the capillary coming from the column through the opening between the flap door and the ICC body towards the detector module.

NOTE

Alternatively, the capillary can also be routed through the incisions at the right side of the ICC dedicated for this purpose.

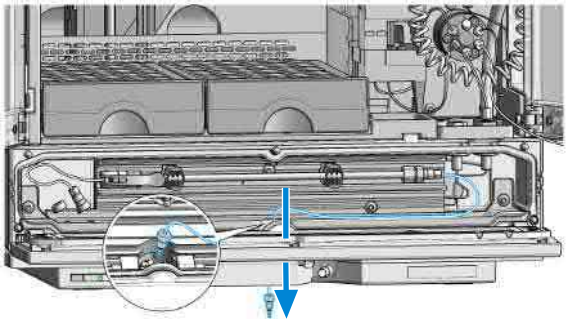

13 Close the flap door until the latch is locked.

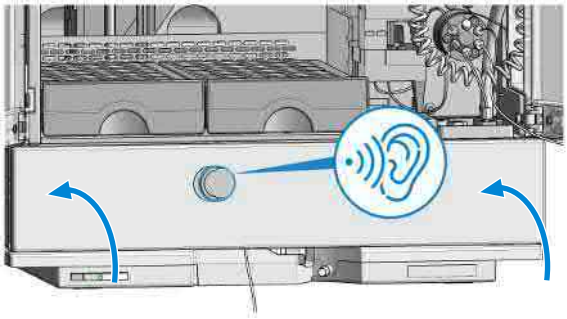

14 Close the doors.

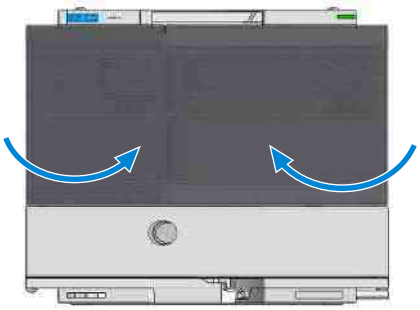

15 Turn on the sampler and the pump.

16 Reconfigure the instrument setup in the CDS.

Install a Column in the ICC

Tools required

Qty.	p/n	Description
2	8710-0510	Open-end wrench 1/4-5/16 inch

Parts required

Qty.	p/n	Description
1		Column (up to 30 cm length)
1	G7116-68003	Column Holder Lamella, 2/pk

For more information on recommended capillary types, refer to Capillary Connections on page 337.

Preparations

- Switch off the pump
- Switch off the sampler
- Open the doors of the sampler

NOTE A maximum of two columns can be installed.

1 Push the latch of the Integrated Column Compartment to the left.

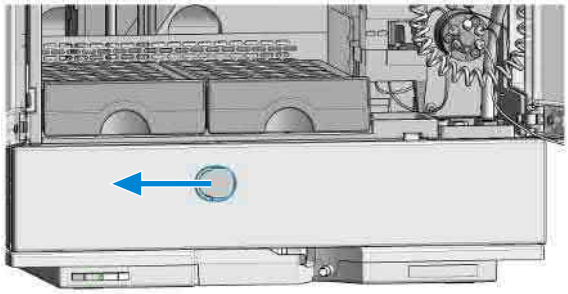

2 Open the flap door.

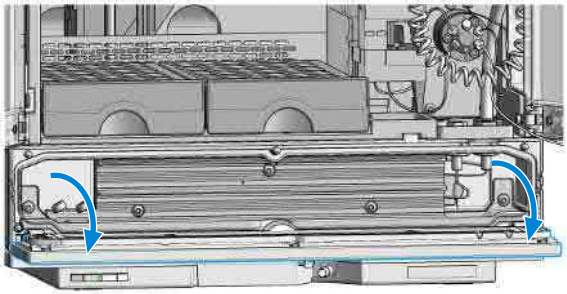

3 Connect the injector valve (port 6) of the Vialsampler to the inlet port of the ICC heat exchanger with a suitable capillary (see Capillary Connections on page 337 for recommendations).

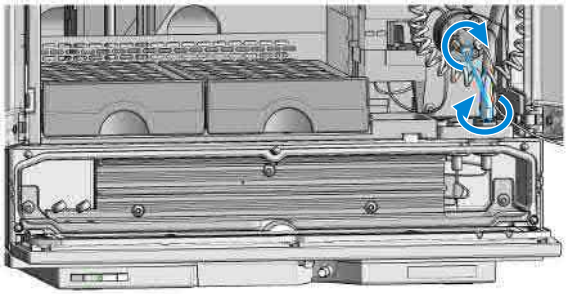

4 Connect a suitable capillary to the respective outlet port of the ICC heat exchanger (see Capillary Connections on page 337 for recommendations).

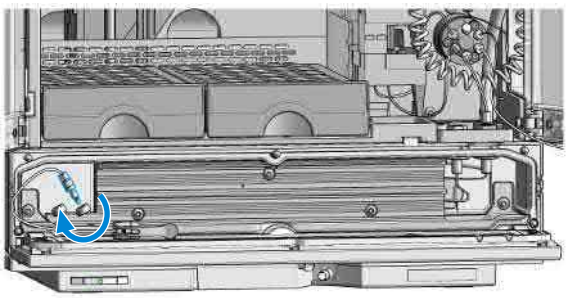

5 Tighten the capillary fitting to make the connection pressure tight.

NOTE Do not overtighten the fitting (maximum torque 2.5 Nm).

NOTE The use of capillaries with SL or SX fittings are recommended for a better handling.

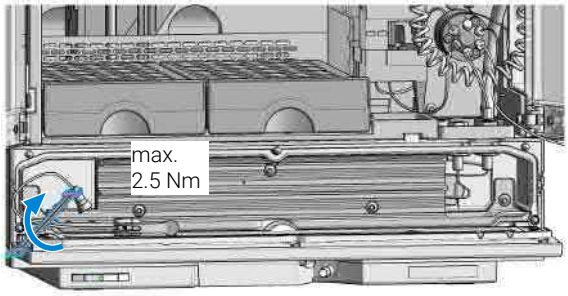

6 Mount the column holders on the heat exchanger.

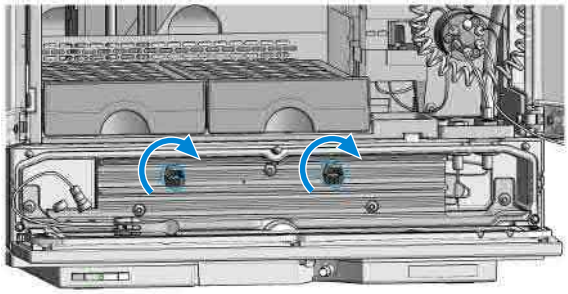

7 Connect the column to the free end of the capillary coming from the ICC heat exchanger. For best performance, use capillaries with the InfinityLab Quick Connect Fitting.

a Turn the column onto the Quick Connect Fitting until the first resistance is observed.

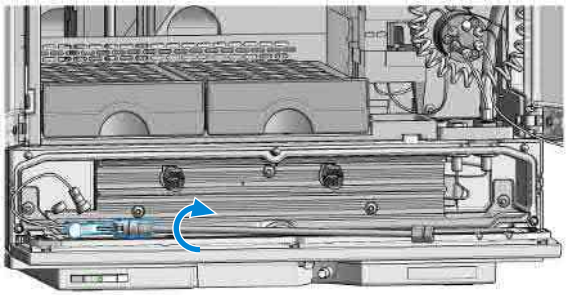

b Close the lever to establish a pressure tight connection.

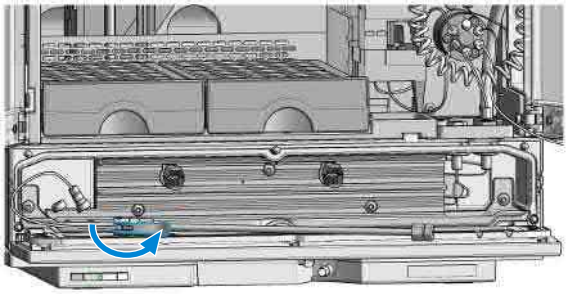

8 Connect a suitable capillary to the outlet port of the column. For best performance, use capillaries with the InfinityLab Quick Turn Fitting.

a Connect the capillary with the Quick Connect Fitting and tighten it until finger-tightness.

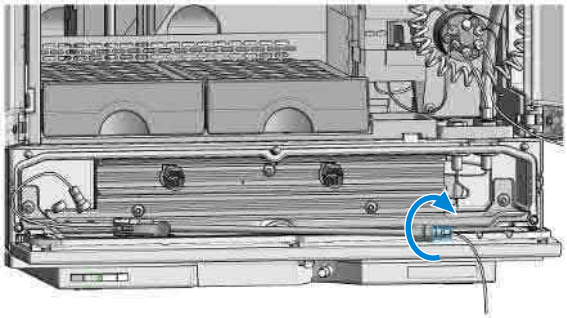

The fitting should be pressure tight up to 600 bar.

b If needed, tighten the fitting further with the help of two suitable wrenches.

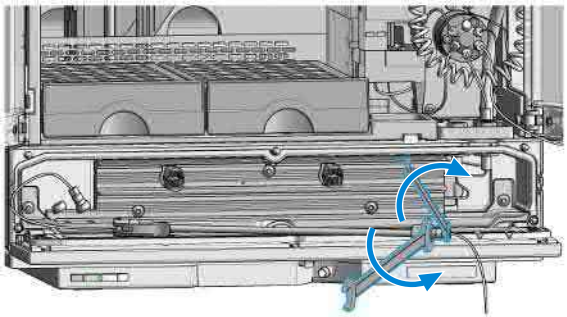

9 Mount the column in the column holder clip(s).

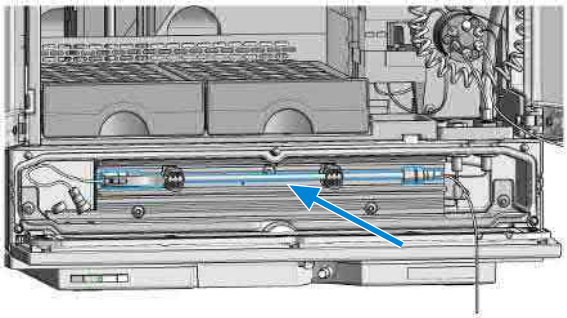

10 Route the capillary coming from the column through the opening between the flap door and the ICC body towards the detector module.

NOTE

Alternatively, the capillary can also be routed through the incisions at the right side of the ICC dedicated for this purpose.

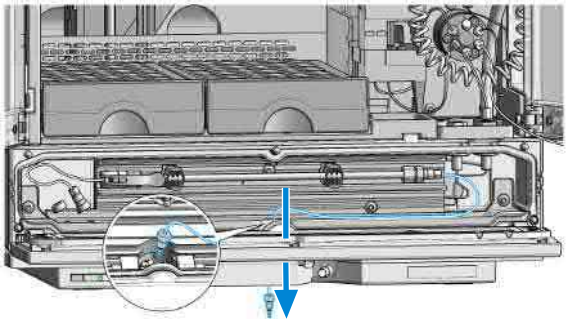

11 Close the flap door until the latch is locked.

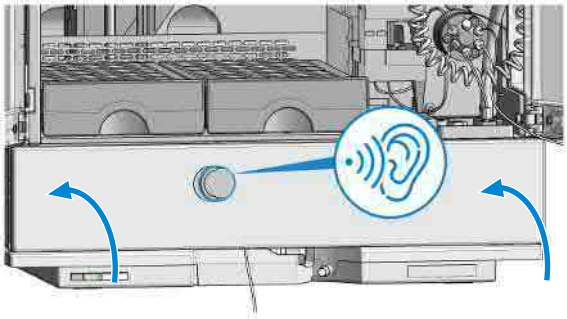

12 Close the doors.

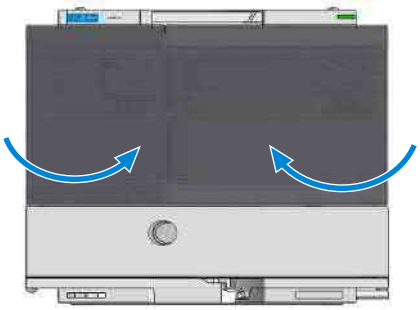

13 If applicable, connect the column identification tag to the tag reader, see Connect a Column Identification Tag to the Tag Reader on page 72.

14 Configure the connected column in the CDS, see Column Assignment on page 150.

Remove a Column From the ICC

Tools required

Qty.	p/n	Description
2	8710-0510	Open-end wrench 1/4-5/16 inch

Preparations

- Switch off the pump
- Switch off the sampler
- Open the doors of the sampler

1 Push the latch of the Integrated Column Compartment to the left.

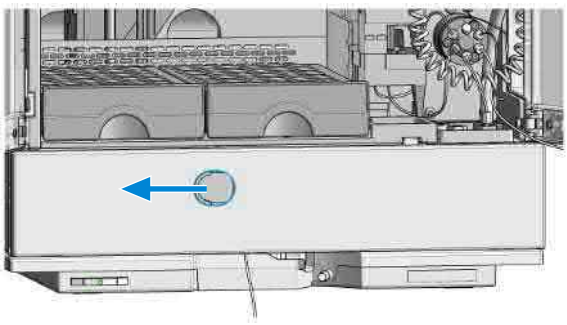

2 Open the flap door.

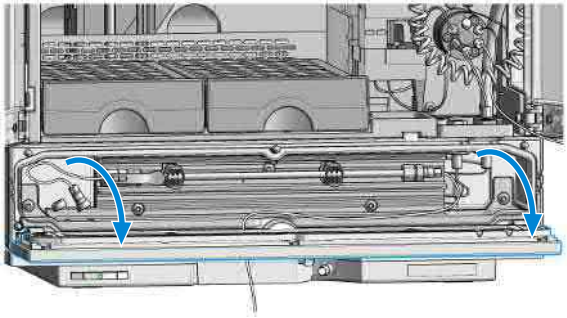

3 Remove the column from the column holder clips.

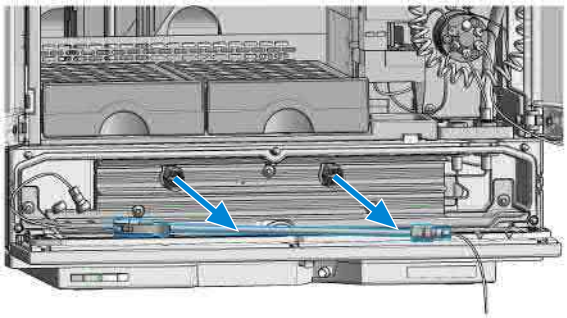

4 Loosen the Quick Turn Fitting either with your fingers or with the help of two wrenches.

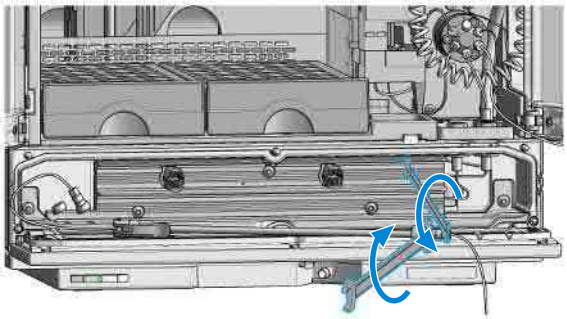

5 Remove the capillary from the outlet port of the column.

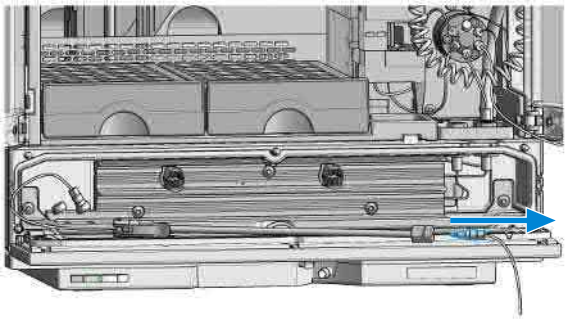

6 To release the tension on the Quick Connect fitting, lift the lever.

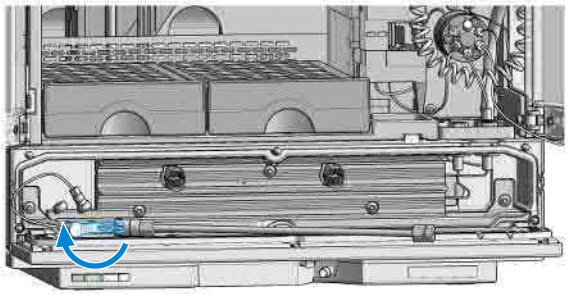

7 Unscrew and remove the Quick Connect Fitting.

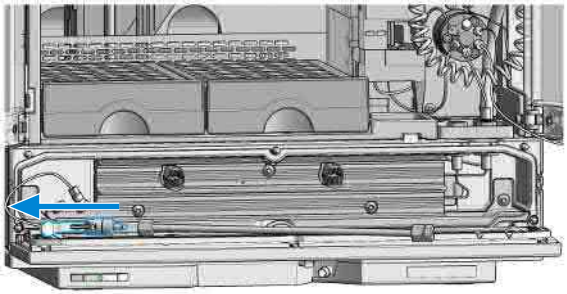

8 Remove the column from the ICC.

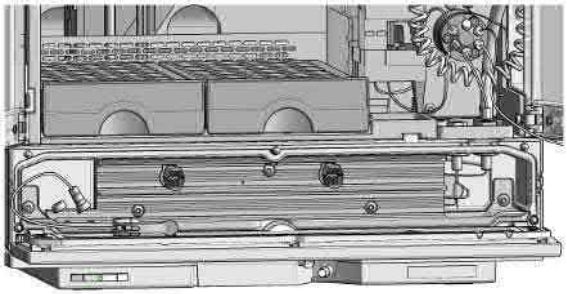

9 Close the flap door until the latch is locked.

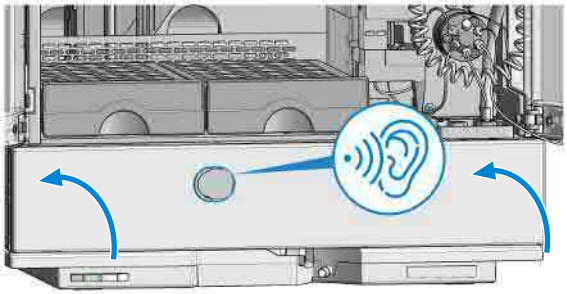

Install the Column Shelf

Tools required

Qty.	p/n	Description
2	8710-0510	Open-end wrench 1/4-5/16 inch

Parts required

Qty.	p/n	Description
1	G7129-60023	Column Shelf

Preparations

- Finish any pending acquisition job.
- Stop the flow at the pump and remove the solvent lines from the eluent bottles to avoid spilling solvent.
- Close the shutoff valves at the pump if available.
- Switch off the sampler and disconnect it from the power supply.
- Open the doors of the sampler.

WARNING

Fire or explosion due to missing leak drainage

Solvents may run into the module if column shelf or Integrated Column Compartment are not installed.

— **Install either column shelf or Integrated Column Compartment before starting the module.**

NOTE

When storing the ICC, plug the ports with a blank nut to prevent dust from entering the heat exchanger capillaries.

1 Remove the capillary connecting the injection valve and the ICC heat exchanger.

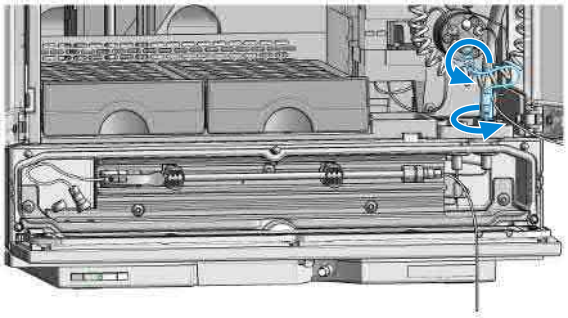

2 Remove the column from the column holder clips.

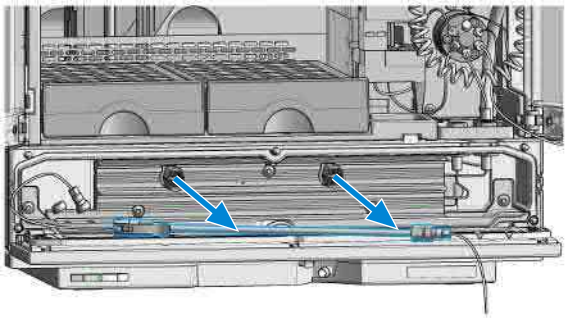

3 Loosen the Quick Turn Fitting either with your fingers or with the help of two wrenches.

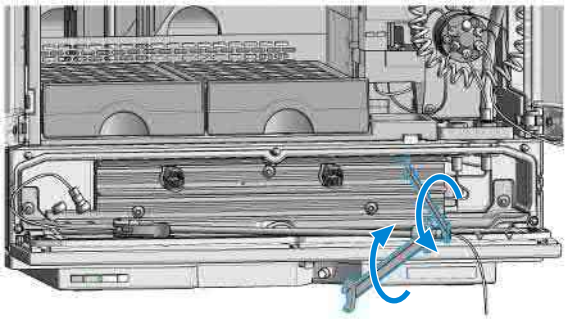

4 Remove the capillary from the outlet port of the column.

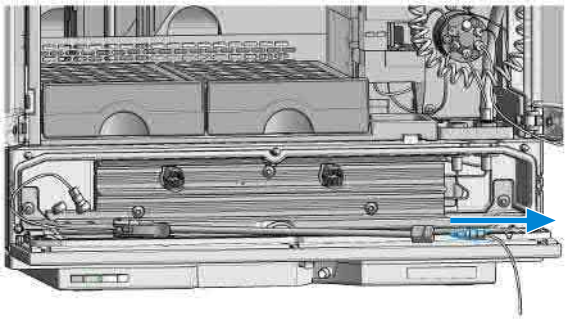

5 To release the tension on the Quick Connect fitting, lift the lever.

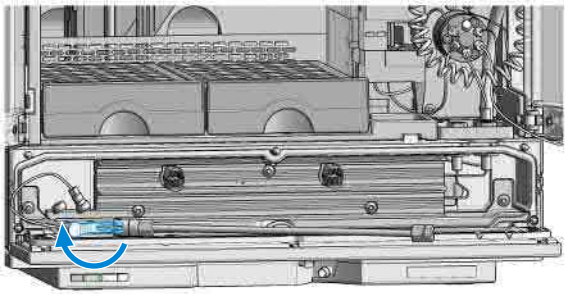

6 Unscrew and remove the Quick Connect Fitting.

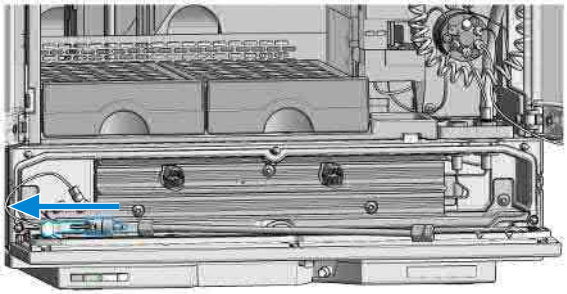

7 Remove the column from the ICC.

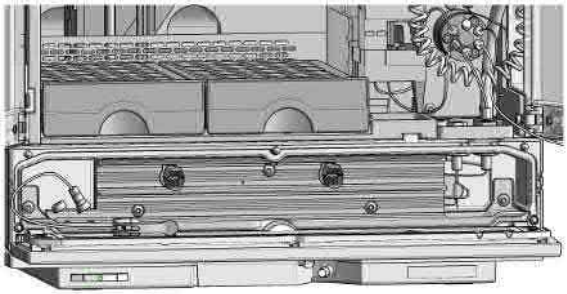

8 Close the flap door until the latch is locked.

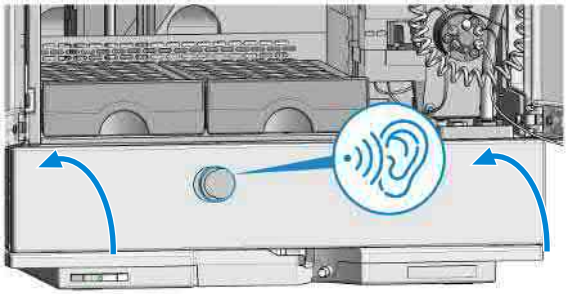

9 Remove the Integrated Column Compartment.

a Press the release buttons on the left and right side.

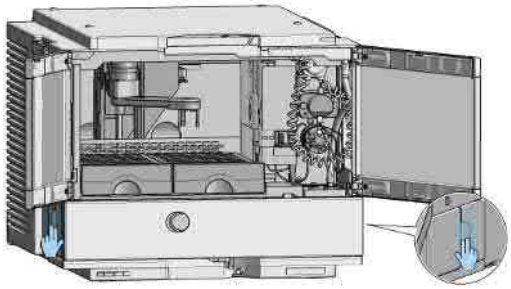

b Pull out the Integrated Column Compartment.

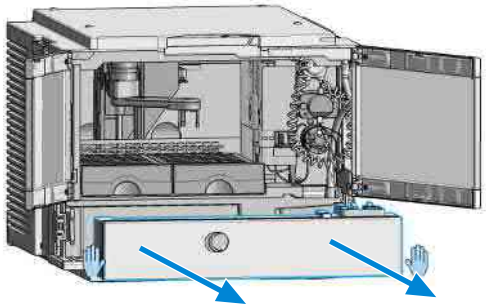

The Integrated Column Comparment is removed.

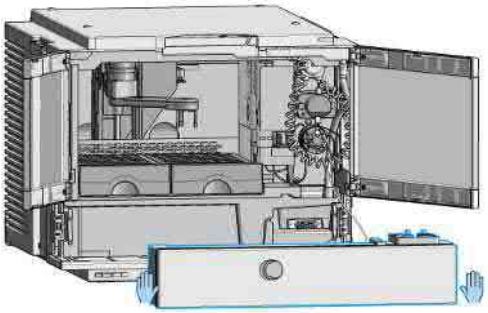

10 Install the column shelf

a Push in the column shelf.

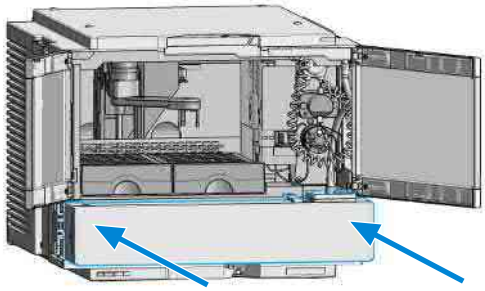

b Ensure that the release buttons are clicked back in their original position.

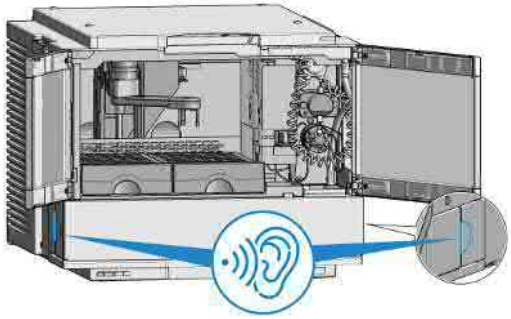

The column shelf is installed.

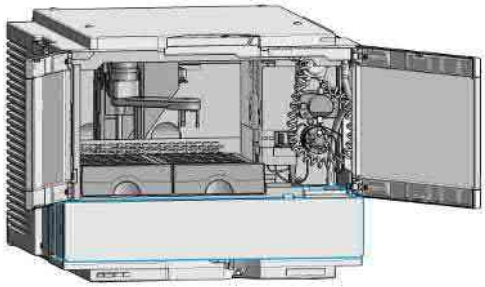

11 Close the doors.

12 Turn on the sampler and the pump.

13 Reconfigure the instrument setup in the CDS.

Install the Column ID Upgrade Kit

Parts required

Qty.	p/n	Description
1	G4751A	Column ID Upgrade Kit for the Integrated Column Compartment (includes the tag reader, 2 column identification tags and a technical note)
		OR
1	5067-6153	Column ID Tag Reader
1	5067-5917	InfinityLab Column Identification Tag

Preparations

- Power off the instrument.
- Install the Integrated Column Compartment, see Install the Integrated Column Compartment on page 43.

NOTE

To use the G4751A Column ID Upgrade Kit, the Agilent Integrated Column Compartment must be installed in the Vialsampler.

1 Place the two mounting clips onto the left side of the Vialsampler. Make sure of the correct orientation.

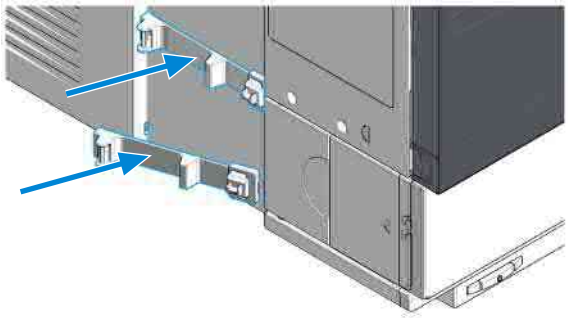

2 Mount the tag reader to the mounting clips.

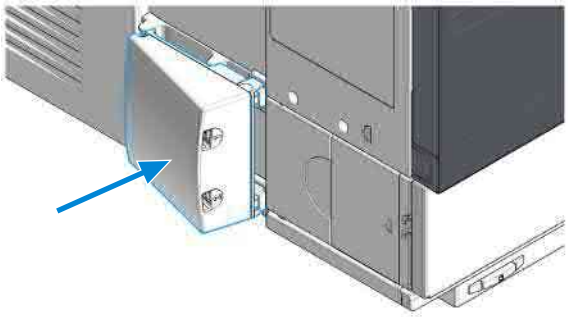

3 Connect the cable of the tag reader to the respective socket on the back of the Vialsampler.

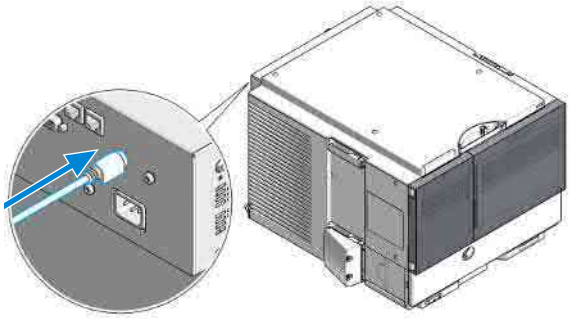

4 Fix the cable to the back of the sampler with the cable clips provided with the tag reader.

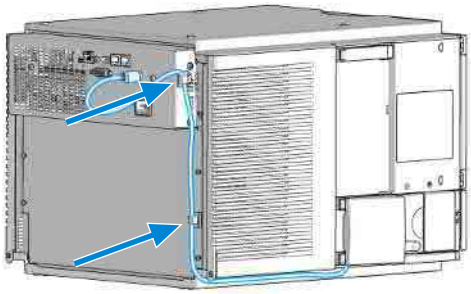

5 Power on the instrument.

6 Place a column with an identification tag in the ICC and plug the tag into the tag reader, see Connect a Column Identification Tag to the Tag Reader on page 72.

Connect a Column Identification Tag to the Tag Reader

Tools required

Qty.	p/n	Description
2	8710-0510	Open-end wrench 1/4-5/16 inch

Parts required

Qty.	p/n	Description
1	5067-5917	InfinityLab Column Identification Tag
1		Column (up to 30 cm length)

Preparations

- Install the Column ID Tag Reader, see Install the Column ID Upgrade Kit on page 69.
- Remove the column if installed, see Remove a Column From the ICC on page 59.

1 If the column is without a preinstalled identification tag, fit a new tag onto it by slipping the lanyard loop over one end of the column and pulling the cord tight through the plastic holder.

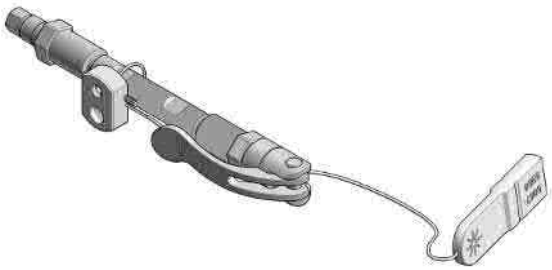

NOTE Once the lanyard is fixed, the tag can no longer be removed from the column.

2 Install the column in the ICC (see Install a Column in the ICC on page 52).

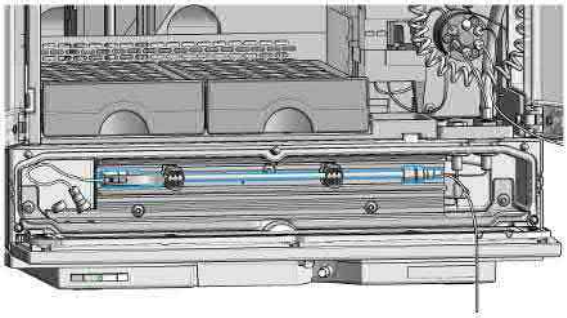

3 Route the cord to the left and plug the column identification tag into the corresponding socket of the tag reader.

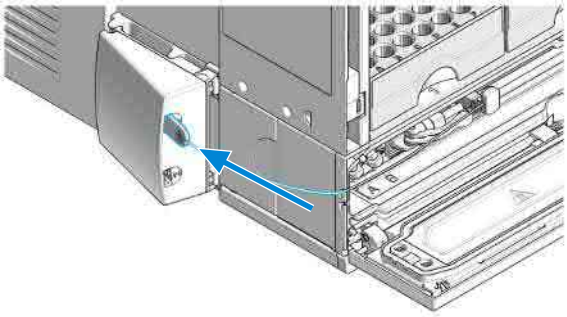

4 Close the flap door until the latch is locked.

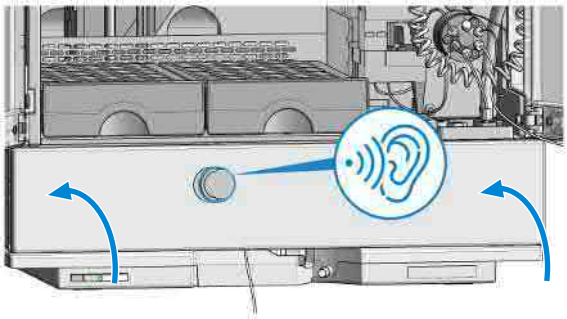

5 Close the doors.

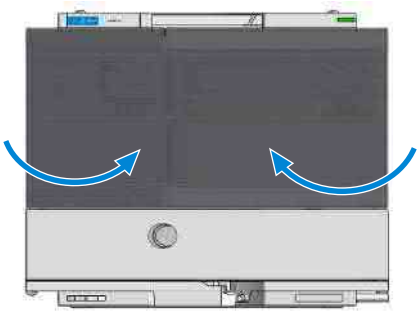

6 Configure the connected column with identification tag in the CDS, see Column Assignment on page 150 and Using Column Identification Tags on page 152.

Installing the Optional Sample Thermostat

Unpacking the Unit

Damaged Packaging

If the delivery packaging shows signs of external damage, please call your Agilent Technologies sales and service office immediately. Inform your service representative that the instrument may have been damaged during shipment.

CAUTION

"Defective on arrival" problems

If there are signs of damage, please do not attempt to install the module. Inspection by Agilent is required to evaluate if the instrument is in good condition or damaged.

- Notify your Agilent sales and service office about the damage.
- An Agilent service representative will inspect the instrument at your site and initiate appropriate actions.

Condensation

CAUTION

Condensation within the module

Condensation can damage the system electronics.

- Do not store, ship or use your module under conditions where temperature fluctuations could cause condensation within the module.
- If your module was shipped in cold weather, leave it in its box and allow it to warm slowly to room temperature to avoid condensation.

Delivery Checklist

Ensure that all parts and materials have been delivered with your module. The delivery checklist is shown below. For parts identification, please check the illustrated parts breakdown in Sample Thermostat Upgrade Kit on page 346. Please report any missing or damaged parts to your local Agilent Technologies sales and service office.

Table 13: Delivery checklist for the Sample Thermostat

Description	Quantity
G7167-60201 (Sample Thermostat)	1
5067-6208 (Condensate Drainage Kit)	1
Declaration of Conformity	1
Customer Letter	1

Install the Sample Thermostat

Tools required

Qty.	p/n	Description
1	5182-3466	Torx screwdriver T10 (for the Sample Thermostat)
		OR
1	5023-3089	Torx key set (part of the G7120-68708 InfinityLab LC Series Tool Kit)

Parts required

Qty.	p/n	Description
1		Sampler
1	G7167-60201	Sample Thermostat
1		Power cord
1	5067-6208	Condensate Drainage Kit

Preparations

- The hosting sampler is installed in the HPLC stack.

NOTE

Visit https://www.agilent.com/ for a video tutorial on installing the Agilent InfinityLab Sample Thermostat. Find the video by the following options:

— Enter the link https://www.agilent.com/search/?Ntt=install-infinitylab-sample-thermostat.

— Alternatively, the video is available on the landing page of any compatible Agilent autosampler under the section **Videos**.

WARNING

Flammable refrigerant

Formation of flammable gas-air mixtures inside the Sample Thermostat and laboratory.

— **Keep open fire or sources of ignition away from the device.**

— **Ensure a room size of 4 m^3 (1 m^3 for every 8 g of R600a refrigerant inside of the Sample Thermostat).**

— **Ensure adequate ventilation: typical air exchange of 25 m^3/h per m^2 of laboratory floor area.**

— **Keep all ventilation openings in the enclosure clear of obstructions. Do not block the openings on the circumference of the Sample Thermostat.**

WARNING

Flammable refrigerant used

- **When handling, installing and operating the Sample Thermostat, care should be taken to avoid damage to the refrigerant tubing or any part of the Sample Thermostat.**

WARNING

In the event of a damage

- **Keep open fire or sources of ignition away from the device.**
- **Ventilate the room for several minutes.**
- **Do not use the Sample Thermostat any more.**

CAUTION

Routing of the condensation tubing

Proper routing of the condensation tubing is critical for correct condensate drainage.

- Do not place the sampler directly on the bench.

CAUTION

Condensate inside the module

Damage to the electronics of the module

- After installation of the Sample Thermostat, wait at least 30 min before switching on the module.
- Make sure there is no condensate inside the module.

NOTE

If the Sample Thermostat is disconnected from the power supply, wait for at least five minutes before replugging and switching on the compressor again.

NOTE

Even under average humidity conditions, a significant amount of condensed water gathers every day. A suitable container must be provided and emptied regularly to avoid overflow.

NOTE

For best performance of the Sample Thermostat, all drawers must be installed in the sampler. For the Multisampler, use dummy drawers (G4267-60024) if no full hotel configuration is needed.

NOTE

Depending on the ambient conditions in the lab, the amount of condensate can vary from 200 mL to 2 L per day. Do not fill waste containers for the condensate to the top. Regularly empty the waste container.

NOTE

The setup with the condensate collector funnel is suitable for bench installations only. For installations on an InfinityLab Laboratory Instrument Bench, use the alternative installation described in the *Installation of the Infinity II Cooler/ Thermostat Condensate Drainage Tubing Kit Technical Note (G7167-CoolerCondensateDrainage-TechPu-en-SD-29000254.pdf, SD-29000254)*. Enter the link https://www.agilent.com/search/?Ntt=Installation-of-the-Infinity-II-Cooler/Thermostat-Condensate-Drainage-Tubing-Kit-Technical-Note to locate the TechNote on https://www.agilent.com/.

1 Ensure that the power switch on the front of the module is OFF (switch stands out).

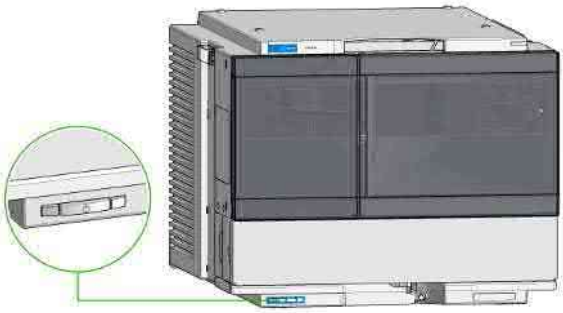

2 Disconnect the power cable from the sampler.

3 Loosen the four screws on the rear of the module.

4 Remove the sheet metal back cover of the sampler.

5 Slide the Sample Thermostat halfway into the sampler.

WARNING

Module is partially energized when switched off, as long as the power cord is plugged in.

Repair work at the module can lead to personal injuries, e.g. shock hazard, when the cover is opened and the module is connected to power.

- **Make sure that it is always possible to access the power plug.**
- **Do not use the Sample Thermostat if it is not operating correctly or has been damaged. Disconnect it from the power supply and call your local service center.**
- **Remove the power cable from the module before opening the cover.**
- **Do not connect the power cable to the module while the covers are removed.**
- **If the Sample Thermostat is disconnected from the power supply, you should wait for at least five minutes before switching on the compressor.**

CAUTION

Damaged electronics

- To avoid damages of the electronics of the module make sure the power cords are unplugged before disconnecting or reconnecting the sampler to the Sample Thermostat cables.

6 Connect the power cable and the data cable to the Sample Thermostat.

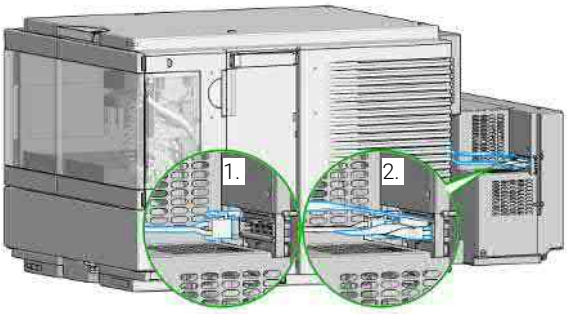

CAUTION

Damage to the cables

- Do not bend or pinch the cables.
- Make sure that the Sample Thermostat fits perfectly in the sampler.

7 Slide the Sample Thermostat all the way into the sampler.

8 Fix the Sample Thermostat with the four screws.

9 Use a bubble level to check the leveling of the sampler.

NOTE

To ensure adequate drainage for condensate, the module should be operated in a proper horizontal position.

10 Attach the condensate tube to the outlet port of the condensate collector funnel.

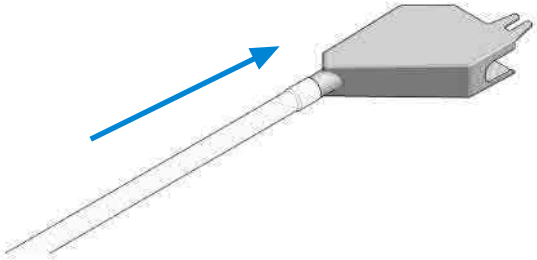

11 Mount the drain connector on the condensate drainage outlet tube. Ensure the correct orientation of the spout.

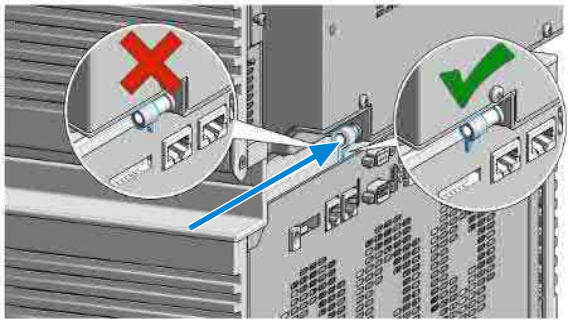

12 Remove the screw situated above the condensate drainage outlet tube.

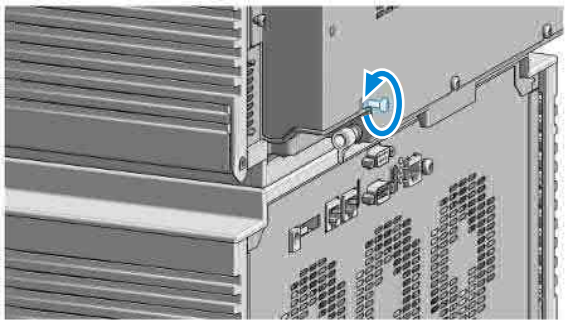

13 Place the washer over the thread of the screw (1). Screw the screw and washer halfway into the hole in the back of the thermostat (2).

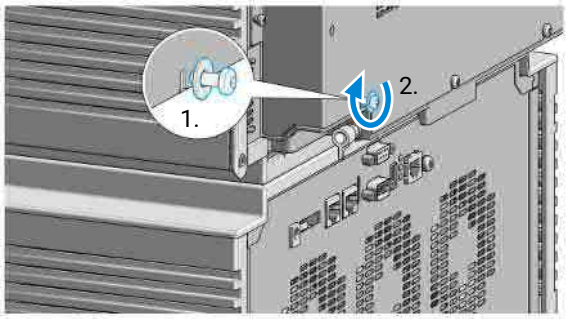

14 Position the condensate collector funnel underneath the condensate drainage outlet tube (1) and fix it to the back of the thermostat by tightening the screw (2). Ensure correct orientation and avoid overtightening the screw.

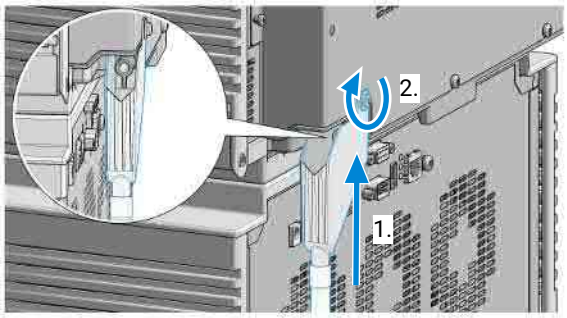

15 Shorten the condensate tube so that it runs straight into the waste container without any unnecessary detour (1). If needed, use the 90 ° tubing connector provided in the kit to eliminate uphill sections, which might occur at the edge of the bench (2). Agilent recommends the use of a separate canister for condensate collection to avoid drainage problems (3).

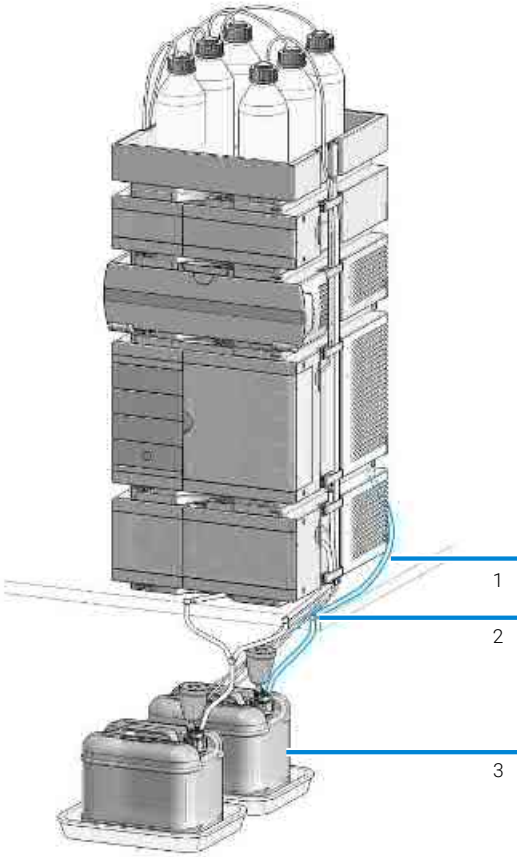

16 Ensure that the tubing runs straight into the waste canister without any bends or joints and it is not hindered by any mechanical obstacle. Agilent recommends using a 6 L waste canister equipped with a suitable InfinityLab Stay Safe cap for optimal condensate handling. If you decide to use your own waste solution, make sure that the tubes don't immerse in the liquid.

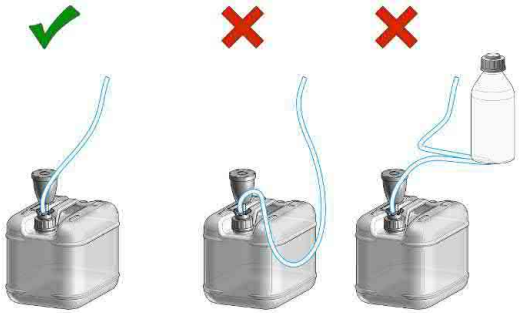

NOTE For more information, see Handling Leak and Waste on page 94.

NOTE Depending on the ambient conditions in the lab, the amount of condensate can vary from 200 mL to 2 L per day. Do not fill the waste container for the condensate to the top. Regularly empty the waste container.

CAUTION Damage to the Sample Thermostat

- Wait at least 30 min before switching on the compressor of the thermostat.
- This allows the refrigerant and system lubrication to reach equilibrium.

17 Connect the power cable to the power connector at the rear of the module.

18 Configure the Sample Thermostat in the CDS.

Installing Capillaries

This section provides information on how to install capillaries and fittings.

Install Capillaries

Capillaries and connections depend on which system is installed.

NOTE As you move to smaller-volume, high-efficiency columns, you will want to use narrow id tubing, as opposed to the wider id tubing used for conventional HPLC instruments.

NOTE Agilent capillaries are color-coded for quick identification, see At-a-Glance Details About Agilent Capillaries on page 413.

Table 14: Capillary connections for 1260 Infinity III systems

p/n	From	To
G7120-60007 (Bottle Head Assembly)	Solvent Bottle	Infinity III Pump
5500-1246 (Capillary ST 0.17 mm x 500 mm SI/SI)	Pump	Sampler
5500-1217 (Capillary, ST, 0.17 mm x 900 mm SI/SX)	Pump	Vialsampler with ICC
5500-1246 (Capillary ST 0.17 mm x 500 mm SI/SI)	Multisampler	MCT Valve/Heat Exchanger
5500-1252 (Capillary, ST, 0.17 mm x 400 mm SL/SL)	Vialsampler	MCT Valve/Heat Exchanger
5500-1240 (Capillary ST 0.17 mm x 105 mm SL/SL)	Vialsampler	ICC Heat Exchanger
5500-1250 (Capillary, ST, 0.17 mm x 120 mm SL/SL, long socket)	ICC Heat Exchanger	Column
5500-1193 (InfinityLab Quick Turn Capillary ST 0.17 mm x 105 mm, long socket)	MCT Heat Exchanger	Column
5500-1191 (InfinityLab Quick Turn Capillary ST 0.12 mm x 280 mm, long socket)	Column/MCT Valve	Detector
5062-8535 (Waste accessory kit (Flow Cell to waste))	VWD	Waste
5062-2462 (Tube PTFE 0.7 mm x 5 m, 1.6 mm od)	DAD/FLD	Waste
G5664-68712 (Analytical tubing kit 0.25 mm i.d. PTFE-ESD)	Detector	Fraction Collector

Table 15: Capillary connections for 1290 Infinity III systems

p/n	From	To
G7120-60007 (Bottle Head Assembly)	Solvent Bottle	Infinity III Pump
5500-1245 (Capillary ST 0.17 mm x 400 mm SI/SI)	Pump	Sampler

p/n	From	To
5500-1217 (Capillary, ST, 0.17 mm x 900 mm SI/SX)	Pump	Vialsampler with ICC
5500-1157 (Capillary ST 0.12 mm x 500 mm SL/S)	Multisampler	MCT Valve/Heat Exchanger
5500-1251 (Capillary ST 0.12 mm x 400 mm SL/SL)	Vialsampler	MCT Valve/Heat Exchanger
5500-1238 (Capillary ST 0.12 mm x 105 mm SL/SL)	Vialsampler	ICC Heat Exchanger
5500-1249 (Capillary ST 0.12 mm x 120 mm SL/SL, long socket)	ICC Heat Exchanger	Column
5500-1201 (Capillary ST 0.12 mm x 105 mm SL)	MCT Heat Exchanger	Column
5500-1191 (InfinityLab Quick Turn Capillary ST 0.12 mm x 280 mm, long socket)	Column/MCT Valve	Detector
5062-8535 (Waste accessory kit (Flow Cell to waste))	VWD	Waste
5062-2462 (Tube PTFE 0.7 mm x 5 m, 1.6 mm od)	DAD/FLD	Waste
G5664-68712 (Analytical tubing kit 0.25 mm i.d. PTFE-ESD)	Detector	Fraction Collector

For correct installation of capillary connections it's important to choose the correct fittings, see Syntax for Capillary Description.

1 Select a nut that is long enough for the fitting you'll be using.

2 Slide the nut over the end of the tubing or capillary.

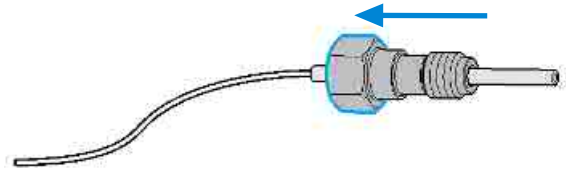

3 Carefully slide the ferrule components on after the nut and then finger-tighten the assembly while ensuring that the tubing is completely seated in the bottom of the end fitting.

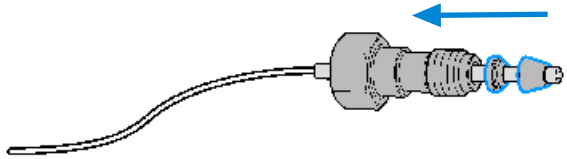

4 Use a stable port installed to the module to gently tighten the fitting facing to the module. Or use the column to tighten the fitting facing to the column. This measure forces the ferrule to seat onto the tubing or capillary.

NOTE Do not overtighten. Over-tightening will shorten the lifetime of the fitting.

5 Loosen the nut and verify that the ferrule is correctly positioned on the tubing or capillary.

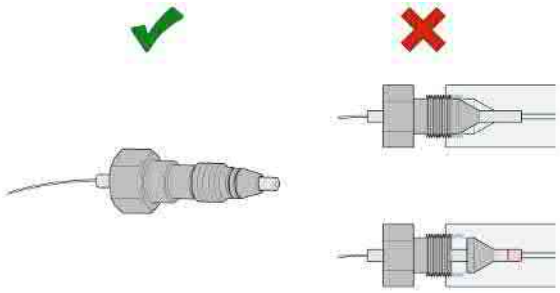

NOTE The first time that the Swagelok fitting is used on a column or an injection valve, the position of the ferrule is permanently set. If changing from a column or an injection valve to another, the fitting may leak or decrease the quality of the separation by contributing to band broadening.

For Bio and Bio-Inert Systems, the Swagelok instructions do not apply.

Install Flow Connections to the Vialsampler

Preparations

- Module is installed in the system.
- Use an appropriate solvent based on the sample and mobile phase chemistries.
- The composition of the wash solvent should be the most solubilizing compatible solvent (your strongest diluent). Selecting the wash solvent is part of the method development.
- A mixture of 50 % up to 100 % organic solvent in distilled water is a good choice for many applications.

NOTE

The silicone waste drainage is suitable for most common wash solvents. For critical wash solvents, it may be necessary to replace the silicone tube with a PE tube (5042-9974 (Leak tubing (1.5 m, 120 mm required))).

1. Place a needle wash solvent reservoir into the solvent cabinet.
2. Connect the a Bottle Head Assembly to the solvent reservoir and close the bottle.
3. Guide the tube of the Needle Wash Bottle Head Assembly through the cover opening and connect it to the peristaltic pump.
4. Route the drainage of the wash port outlet to the waste container.
5. Prime the wash tubing.
6. Install the capillary from the pump outlet into the port 1 of the injection valve.
7. Install the capillary from port 6 of the injection valve to the ICC or MCT

The correct plumbing is shown in the figure below and is attached to the module.

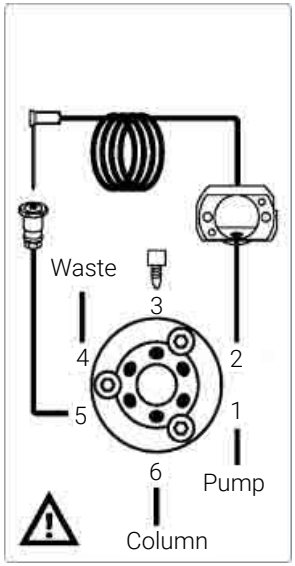

8 Prime and purge the complete sampler.

Handling Leak and Waste

The Agilent InfinityLab LC Series has been designed for safe leak and waste handling. It is important that all security concepts are understood and instructions are carefully followed.

The solvent cabinet is designed to store a maximum volume of 8 L solvent. The maximum volume for an individual bottle stored in the solvent cabinet should not exceed 2 L. For details, see the usage guideline for the Agilent Infinity III Solvent Cabinets (a printed copy of the guideline has been shipped with the solvent cabinet, electronic copies are available on the Internet).

All leak plane outlets are situated in a consistent position so that all Infinity and Infinity II/III modules can be stacked on top of each other. Waste tubes are guided through a channel on the right hand side of the instrument, keeping the front access clear from tubes.

The leak plane provides leak management by catching all internal liquid leaks, guiding them to the leak sensor for leak detection, and passing them on to the next module below, if the leak sensor fails. The leak sensor in the leak plane stops the running system as soon as the leak detection level is reached.

Solvent and condensate is guided through the waste channel into the waste container:

- from the detector's flow cell outlet
- from the Multisampler needle wash port
- from the Sample Thermostat (condensate)
- from the pump's Seal Wash Sensor (if applicable)
- from the pump's Purge Valve or Multipurpose Valve

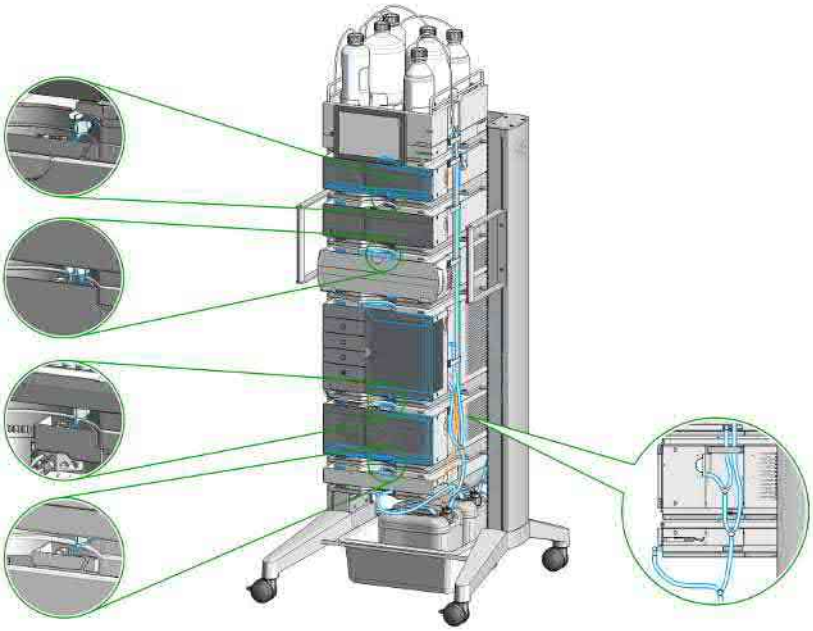

Figure 9: Infinity III Leak Waste Concept (Flex Bench installation)

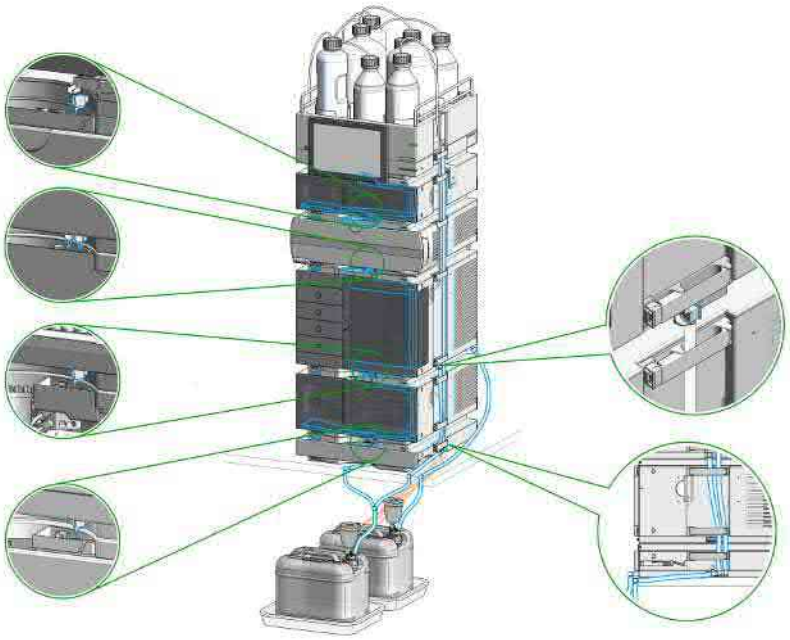

Figure 10: Infinity III Single Stack Leak Waste Concept (bench installation)

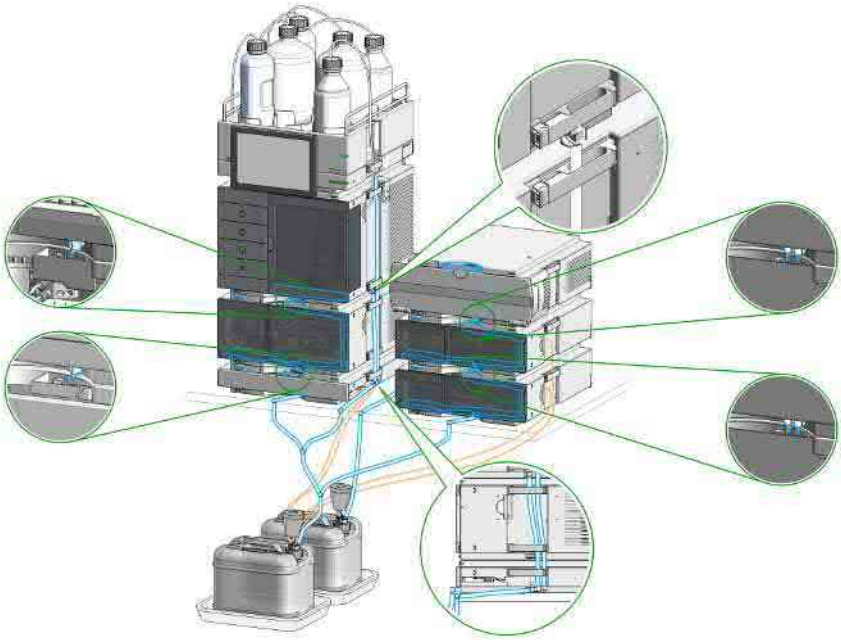

Figure 11: Infinity III Two Stack Leak Waste Concept (bench installation)

The waste tube connected to the leak plane outlet on each of the bottom instruments guides the solvent to a suitable waste container.

Drain Connectors Installation

Drain Connectors have been developed to improve leak drainage for low flow leaks of high viscosity solvents (for example, isopropanol) in Agilent InfinityLab LC Series Systems. Install these parts to modules where they are missing (usually preinstalled).

- Make sure that dripping adapters are correctly installed on each module in the LC stack, excluding lowest module.
- Remove the dripping adapter if it is appeared to be installed on the lowest module in the LC stack and connect waste tube instead.
- Consider 5004-0000 (Drain Connectors Kit) if drain adaptor is missing on some module(s).

For illustration, see Handling Leak and Waste on page 94.

Parts required

Qty.	p/n	Description
	5004-0000	Drain Connectors Kit

Content of Drain Connectors Kit (p/n 5004-0000)

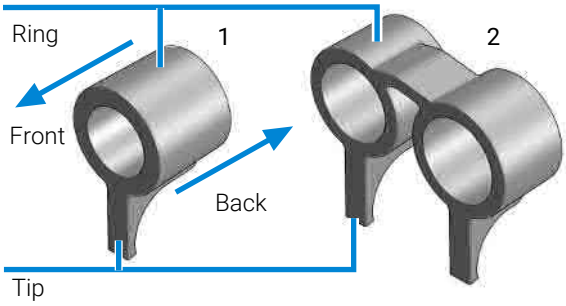

Figure 12: Overview of Drain Connectors: Single (left) and Double (right)

Qty.	p/n	Description
Parts can be ordered only as a complete kit.		
3	5043-1834	Single Drain Connector ID3.0-Long
1	5043-1836	Double Drain Connector-Long

Table 16: Compatibility of drain connectors and modules

Drain Connector Type	Compatible Module	Compatible Module Type
Double	G7116A/B	Column Compartment
Single	G7114A/B	Detector
	G7115A	
	G7117A/B/C	
	G7121A/B	
	G7162A/B	
	G7165A	
	G7129A/B/C	Sampler
	G7167A/B/C	
	G5668A	
	G7137A	
	G7157A	
	G4767A	
	G7122A	Degasser
	G7104A/C	Pump
	G7110B	
	G7111A/B	
	G7112B	
	G7120A	
	G7131A/C	
	G7132A	
	G5654A	
	G4782A	

Preparations

- Leak drains of LC modules are clean and free of salt or solvent residuals.

NOTE

Do not install drain connectors on the bottom modules of the stack. Drain outlet of the bottom module has to be connected via waste tubing to a suitable waste container (see Leak and Waste Handling in the manual for a respective module).

NOTE In case of incorrect installation, drain connectors cannot fully perform the intended function.

NOTE It is not required to power off the HPLC stack to install Single and Double Drain Connectors. The installation of the connectors does not affect the analysis performed during the installation.

Install the Double Drain Connector on the leak drain of the 1260 Infinity III Multicolumn Thermostat (G7116A)/ 1290 Infinity III Multicolumn Thermostat (G7116B)

1 Align the rings with the leak drain outlets of the module, press slightly with the fingers, and slide the connector along the leak drain outlets until it is aligned with the front of the leak drain.

Install Single Drain Connectors on other modules in the LC stack

1 Align the ring with the leak drain outlet of the module, press slightly with the fingers, and slide the connector along the leak drain outlet until it is aligned with the front of the leak drain.

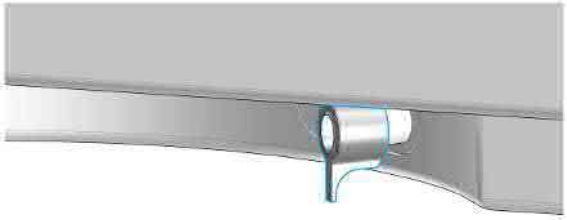

Make sure that the following requirements are covered:

- The tip of the drain connector points straight down.
- The leak drain outlets and the drain connectors are aligned properly.

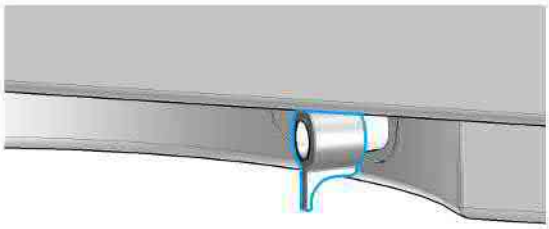

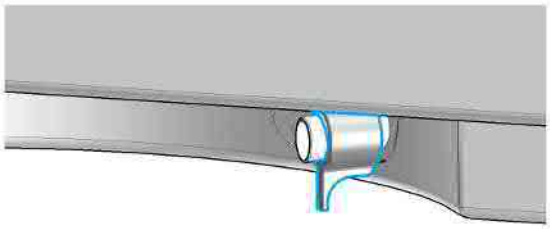

Waste Concept

Agilent recommends using the 5043-1221 (6 L waste can with 1 Stay Safe cap GL45 with 4 ports) for optimal and safe waste disposal. If you decide to use your own waste solution, make sure that the tubes don't immerse in the liquid.

Waste Guidance

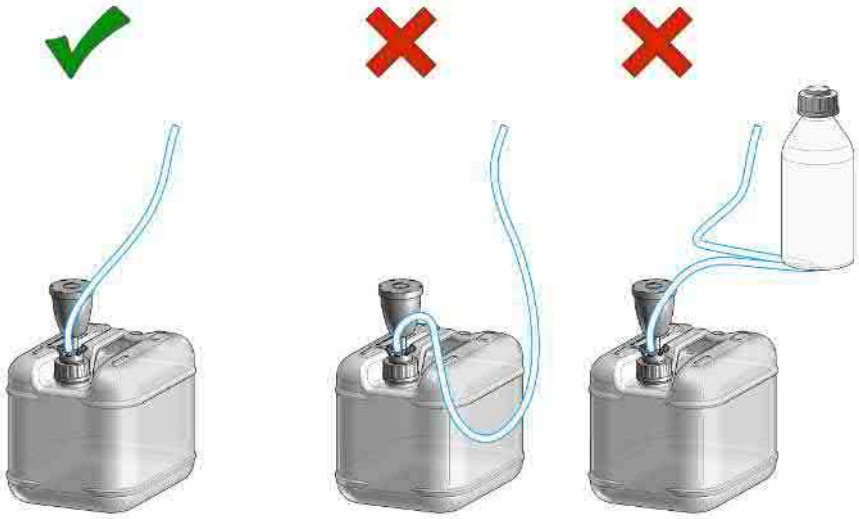

NOTE The waste drainage must go straight into the waste containers. The waste flow must not be restricted at bends or joints.

Leak Sensor

CAUTION Solvent incompatibility

The solvent DMF (dimethylformamide) leads to corrosion of the leak sensor. The material of the leak sensor, PVDF (polyvinylidene fluoride), is incompatible with DMF.

- Do not use DMF as mobile phase.
- Check the leak sensor regularly for corrosion.

NOTE The leak sensor in the sampler is hidden under the ICC Column Heater or Column Shelf respectively.

4 Using the Module

This chapter provides information on how to use the module.

General Information 106
Turn On/Off 106
Status Indicators 108

Preparation of the System 110
Prepare a Run 110
Prime and Purge the System 117

Preparing the Module 119
Preparing Vial Drawers and Trays 119
Choice of Vials and Caps 130
Prepare the Module 133
Setting Up the Vialsampler 134

Preparing the Optional Integrated Column Compartment 145
Dashboard 145
Control Interface 146
Control 147
Method Parameters 148
Online Signals 150
Column Assignment 150
Column Tag Information Table 151
Using Column Identification Tags 152
Using Column ID Tags with ChemStation 153
Availability of Column Information 160

Preparing the Optional Sample Thermostat 163
Dashboard 163
Control Interface 165
Control 165
Temperature Mode 167

Online Signals 168
Reporting Sample Temperature 168
Operation Information 169

Transporting the Sampler 172
Prepare a Sampler Without Thermostat for Transportation 172
Prepare a Sampler With Thermostat for Transportation 172
Install the Transport Protection Foam 174

General Information

Turn On/Off

This procedure exemplarily shows an arbitrary LC stack configuration.

1

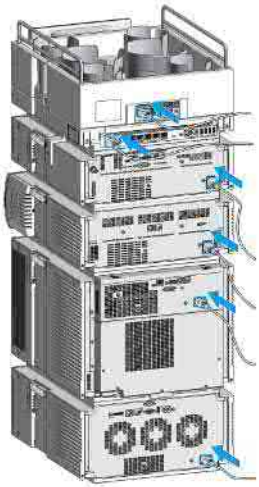

2 On/Off switch: On

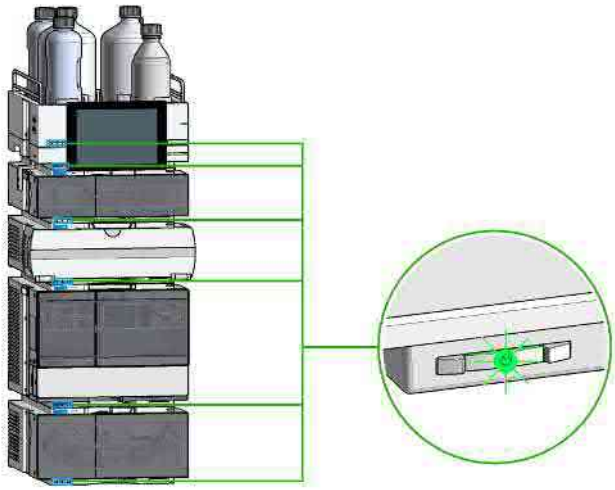

3 Turn instrument **On/Off** with the control software.

4 On/Off switch: Off

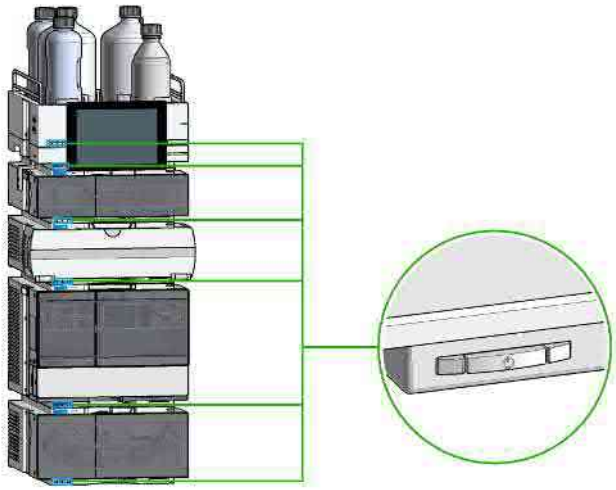

5

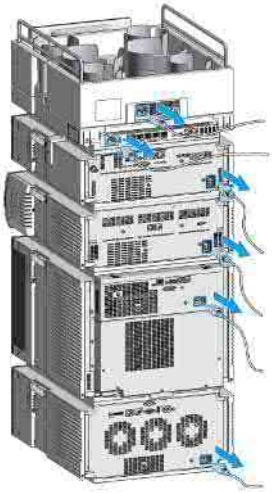

Status Indicators

The module status indicator indicates one of six possible module conditions.

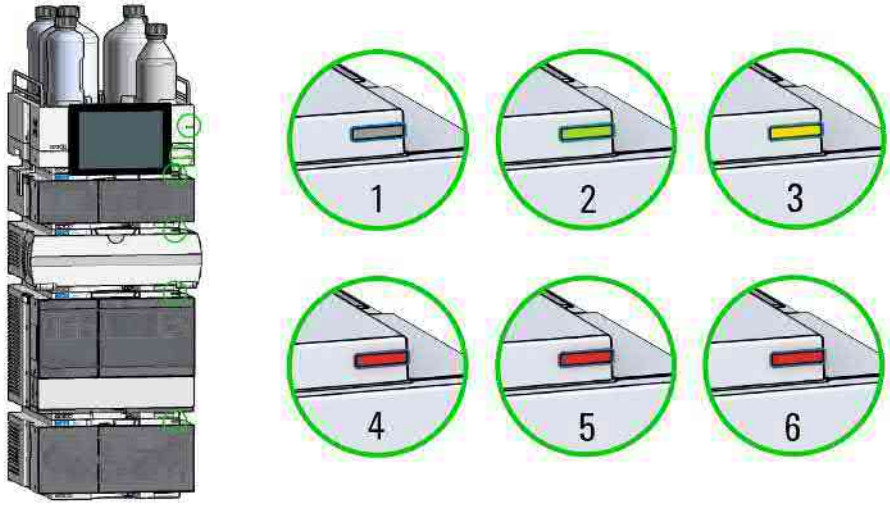

Figure 13: Arbitrary LC stack configuration (example)

1	Idle
2	Run mode
3	Not-ready. Waiting for a specific pre-run condition to be reached or completed.
4	Error mode - interrupts the analysis and requires attention (for example, a leak or defective internal components).
5	Resident mode (blinking) - for example, during update of main firmware.
6	Bootloader mode (fast blinking). Try to re-boot the module or try a cold-start. Then try a firmware update.

InfinityLab Assist Hub Status Indicator

The Assist Hub status indicator displays the status of the entire system. If a module in the system is not ready (yellow), the Assist Hub status indicator also shows not ready (yellow). The same applies for the module conditions **Idle**, **Run mode**, and **Error mode**.

Preparation of the System

Prepare a Run

This procedure exemplarily shows how to prepare a run. Parameters as shown in the screenshots may vary, depending on the system installed.

WARNING

Toxic, flammable and hazardous solvents, samples and reagents

The handling of solvents, samples and reagents can hold health and safety risks.

- **When working with these substances observe appropriate safety procedures (for example by wearing goggles, safety gloves and protective clothing) as described in the material handling and safety data sheet supplied by the vendor, and follow good laboratory practice.**
- **Do not use solvents with an auto-ignition temperature below 200 °C (392 °F). Do not use solvents with a boiling point below 56 °C (133 °F).**
- **Avoid high vapor concentrations. Keep the solvent temperature at least 40 °C (72 °F) below the boiling point of the solvent used. This includes the solvent temperature in the sample compartment. For the solvents methanol and ethanol keep the solvent temperature at least 25 °C (45 °F) below the boiling point.**
- **Do not operate the instrument in an explosive atmosphere.**
- **Do not use solvents of ignition Class IIC according IEC 60079-20-1 (for example, carbon disulfide).**
- **Reduce the volume of substances to the minimum required for the analysis.**
- **Never exceed the maximum permissible volume of solvents (8 L) in the solvent cabinet. Do not use bottles that exceed the maximum permissible volume as specified in the usage guideline for solvent cabinet.**
- **Ground the waste container.**
- **Regularly check the filling level of the waste container. The residual free volume in the waste container must be large enough to collect the waste liquid.**
- **To achieve maximal safety, regularly check the tubing for correct installation.**

1 Switch on the detector.

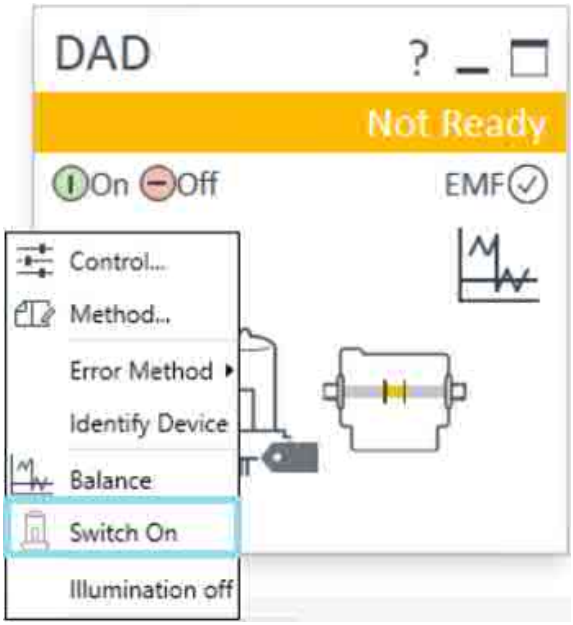

2 Fill the solvent bottles with adequate solvents for your application.

3 Place solvent tubings with bottle head assemblies into the solvent bottles.

4 Place solvent bottles into the solvent cabinet.

5 Solvent bottle filling dialog (in the software).

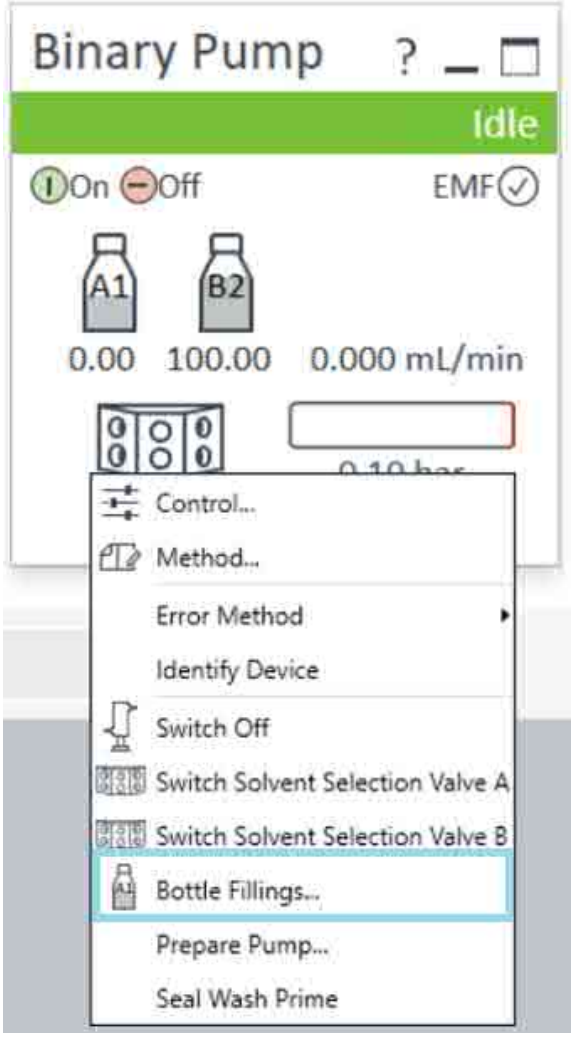

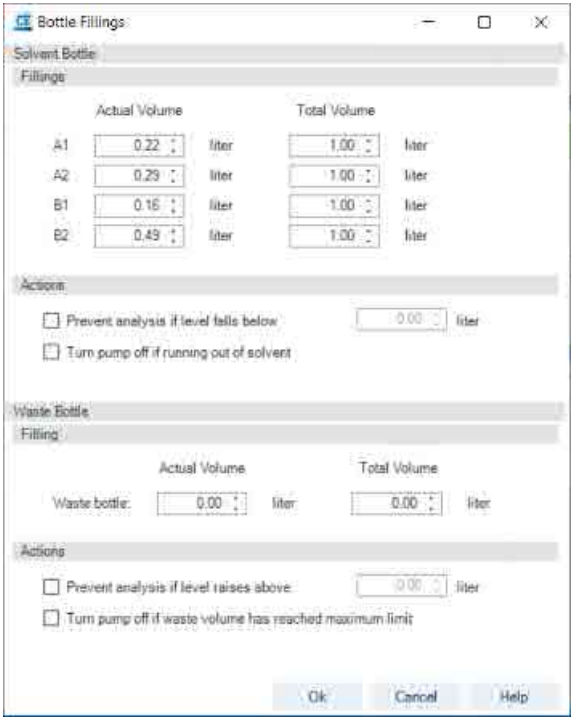

6 Purge the pump.

NOTE

For details on priming and purging, refer to the technical note *Best Practices for Using an Agilent LC System Technical Note (InfinityLab-BestPractice-en-SD-29000194.pdf, SD-29000194)*.

7 Change solvent type if necessary.

8 Choose the tray format of the sampler.

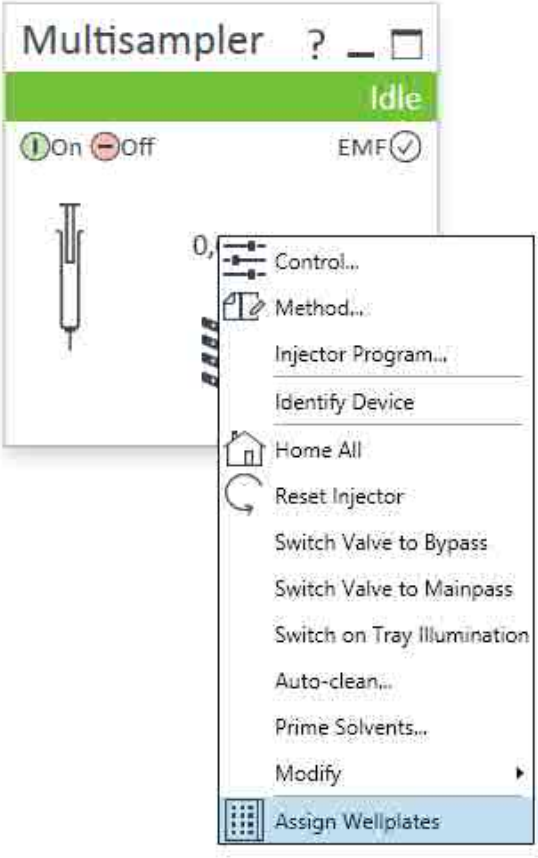

9 Add a new column.

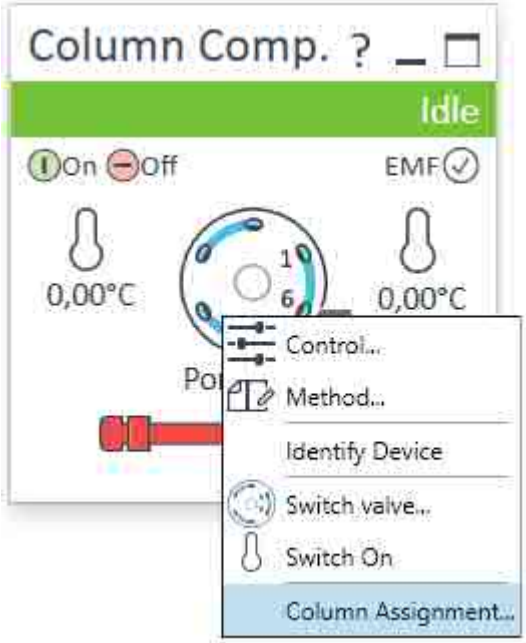

10 Enter the column information.

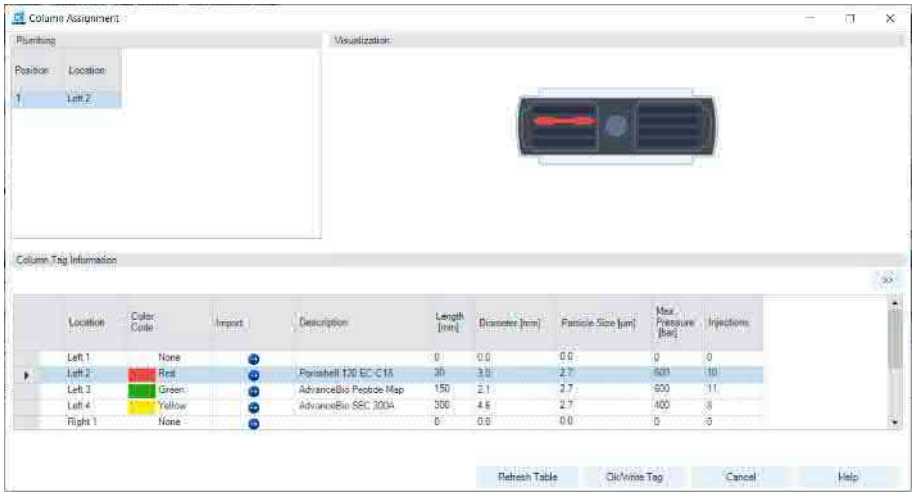

11 Select the column in the Method settings of the column compartment.

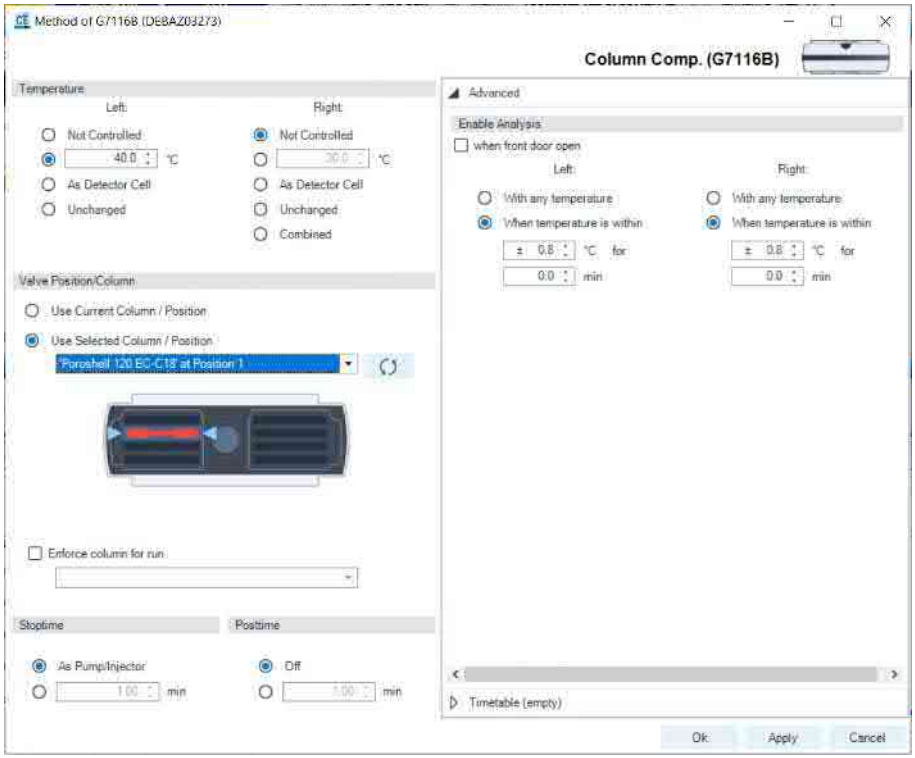

12 Set the detector parameters according to the needs of your method.

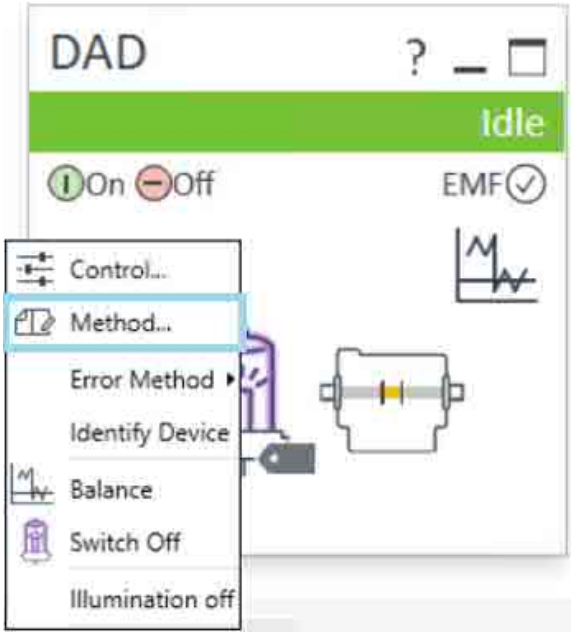
DAD
Idle
On
Off
EMF
Control...
Method...
Error Method
Identify Device
Balance
Switch Off
Illumination off

Prime and Purge the System

When the solvents have been exchanged or the pumping system has been turned off for a certain time (for example, overnight) oxygen will re-diffuse into the solvent channel between the solvent reservoir, vacuum degasser (when available in the system) and the pump. Solvents containing volatile ingredients will slightly lose these. Therefore priming of the pumping system is required before starting an application.

Table 17: Choice of priming solvents for different purposes

Activity	Solvent	Comments
After an installation	Isopropanol	Best solvent to flush air out of the system
When switching between reverse phase and normal phase (both times)	Isopropanol	Best solvent to flush air out of the system
After an installation	Ethanol or Methanol	Alternative to Isopropanol (second choice) if no Isopropanol is available
To clean the system when using buffers	Bidistilled water	Best solvent to re-dissolve buffer crystals
After a solvent change	Bidistilled water	Best solvent to re-dissolve buffer crystals
After the installation of normal phase seals (P/N 0905-1420)	Hexane + 5% Isopropanol	Good wetting properties

NOTE The pump should never be used for priming empty tubings (never let the pump run dry). Use a syringe to draw enough solvent for completely filling the tubings to the pump inlet before continuing to prime with the pump.

1. Open the purge valve of your pump (by turning it counterclockwise) and set flow rate to 3 – 5 mL/min.
2. Flush all tubes with at least 30 mL of solvent.
3. Set flow to required value of your application and close the purge valve.

NOTE Pump for approximately 10 minutes before starting your application.

Preparing the Module

Preparing Vial Drawers and Trays

List of Supported Drawers and Trays

Supported drawers for the module:

p/n	Description
G7129-60010	Drawer for 66 x 2 mL Vials
G7129-60110	Drawer for 18 x 6 mL Vials
G7129-68210	Classic Vial Drawer Kit (a set of left and right drawers)
G7129-60000	External Tray for 5 x 2 mL Vials

NOTE Install all drawers for best cooling performance.

Drawer Combinations

Drawers can be installed in any combination enabling both 2 mL- and 6 mL-vials to be used simultaneously. The only exception is the usage of the classical drawer option (100 x 2 mL). This option can't combine with the other drawers.

Numbering of Vial Positions

The standard 2*66 vial drawers have 132 vial positions from P1-A1-P2-F11. However, when using two drawers, the numbering convention is slightly different. The vial positions of the right-hand drawer begin at position P2-A1 as follows:

Left-hand Drawer for 66 x 2 mL Vials: P1-A1 to P1-F11

Left-hand Drawer for 18 x 6 mL Vials: P1-A1 to P1-C6

Right-hand Drawer for 66 x 2 mL Vials: P2-A1 to P2-F11

Right-hand Drawer for 18 x 6 mL Vials: P2-A1 to P2-C6

Drawer for 50 x 2 mL Vials Classic Left: Vial 1-50

Drawer for 50 x 2 mL Vials Classic Right: Vial 51-100

External Tray 5-position: 201 – 205 Position

(The disposal tube is installed into the external tray by turning and pushing it into the backside of the hole position, No. 206)

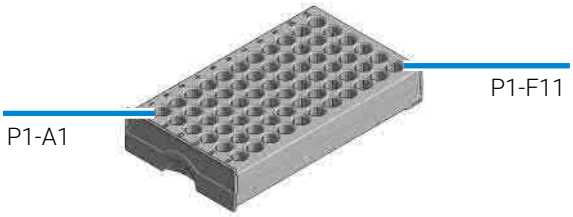

Figure 14: Numbering of drawer position (left-hand Drawer for 66 x 2 mL Vials)

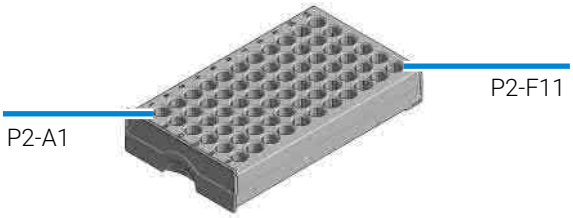

Figure 15: Numbering of drawer position (right-hand Drawer for 66 x 2 mL Vials)

Figure 16: Numbering of drawer position (left-hand Drawer for 18 x 6 mL Vials)

Figure 17: Numbering of drawer position (right-hand Drawer for 18 x 6 mL Vials)

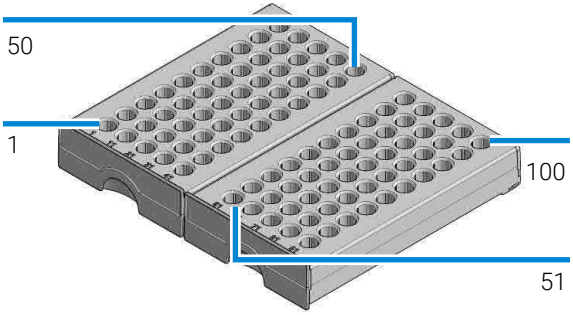

Figure 18: Numbering of drawer position (Drawer for 50 x 2 mL Vials Classic)

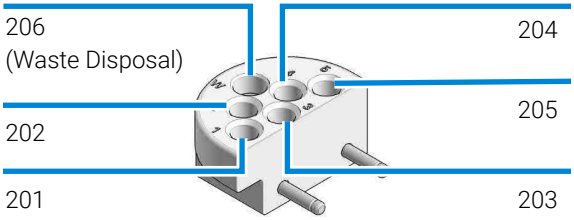

Figure 19: Numbering of tray position (External tray)

Exchange Drawers

NOTE Do not operate the sampler without drawers installed.

NOTE Install all drawers for best cooling performance.

NOTE Do not mix standard and classic drawers.
Install classic drawer 1-50 to the left, classic drawer 51-100 to the right side.

1 Open the doors of the module.

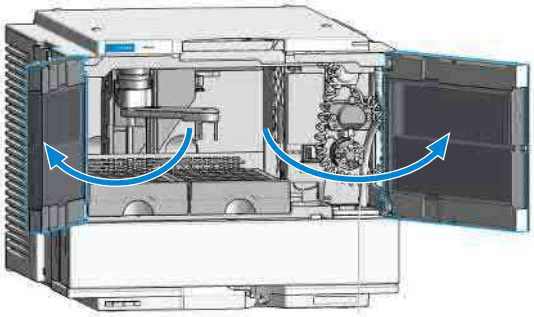

2 Remove the drawer.

a Pull the drawer out.

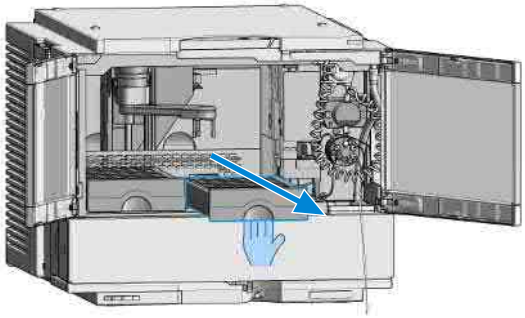

b Lift the front of the drawer.

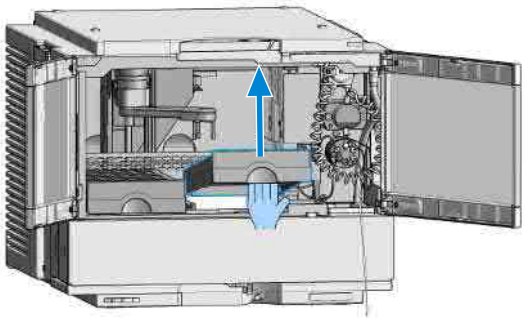

c Lift the drawer out.

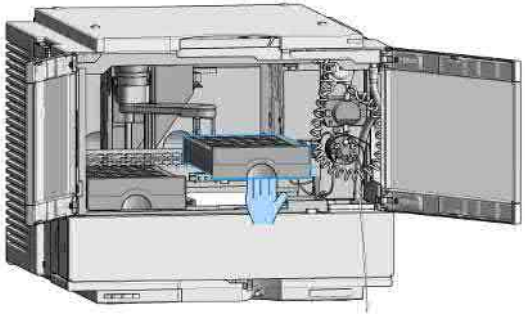

d Remove the drawer.

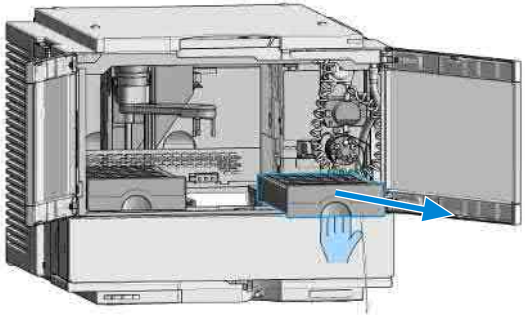

3 Install the drawer.

a Insert the back of the drawer.

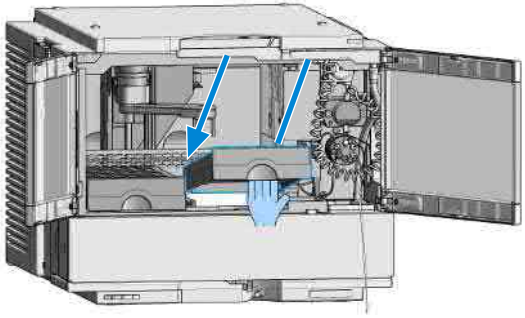

b Align the drawer.

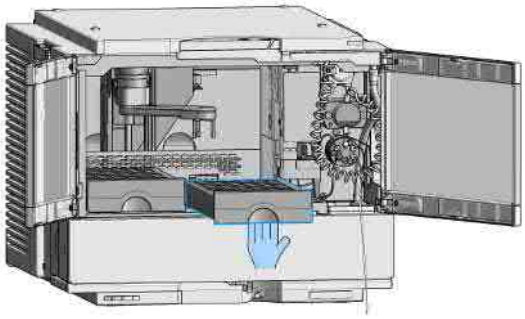

c Push in the drawer.

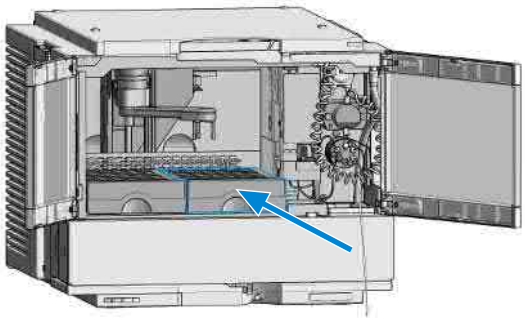

4 Close the doors.

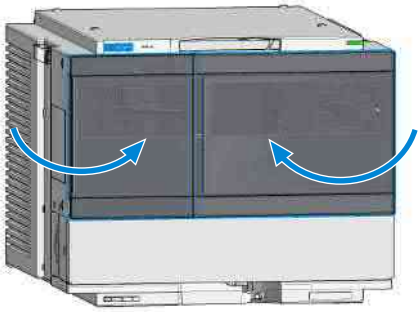

Insert a Vial Into the Sampler

NOTE Attempting to insert a new vial into the sampler while the gripper arm is moving might lead to aborting the ongoing analysis.

1 Open the doors of the module.

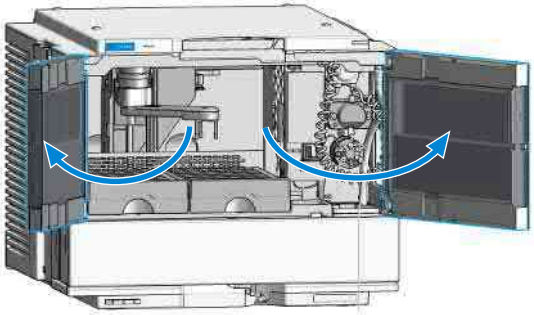

NOTE For accessing the left drawer, it is sufficient to open the left door only.

2 Pull out the vial drawer into which you want to insert the vial.

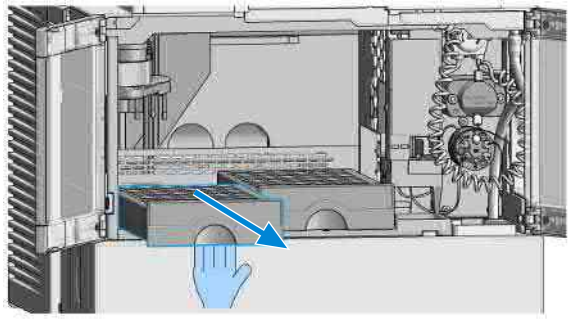

3 Insert the vial into an appropriate position of the drawer.

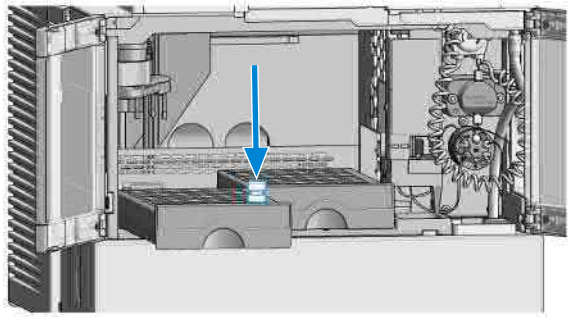

4 Push the vial drawer back into place.

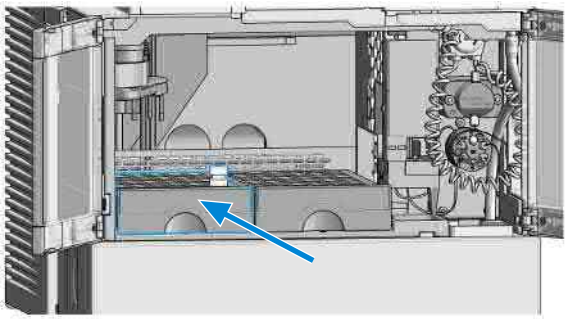

5 Close the doors.

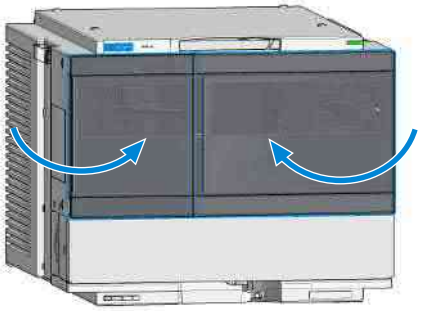

Install the External Tray

Tools required

Qty.	p/n	Description
1	5023-3138	Reversible Screwdriver + Blade 1,0 x 5,5

Parts required

Qty.	p/n	Description
1	G7129-60000	External Tray for 5 x 2 mL Vials
1	G1313-27302	Disposal tube

Preparations

- Finish any pending acquisition job.
- Open the doors of the sampler.

NOTE

Keep foam and plastic cover in a safe place.
For best temperature performance, and if the external tray is not in use, it is best to cover the opening for the external tray with the original parts.

1 Remove the foam and the plastic cover.

a Lift the front part of the foam with a flathead screw driver.

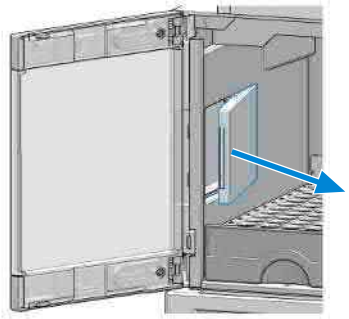

b Remove the foam.

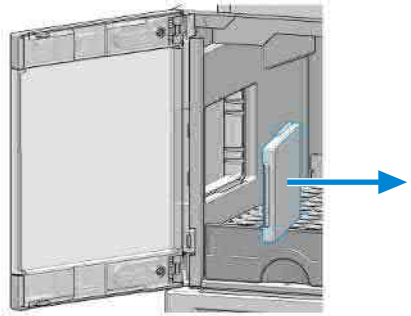

c Push out the plastic cover.

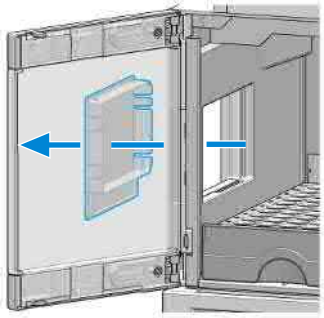

2 Install the external tray and the disposal tube.

a Mount the external tray in the mounting holes on the left side of the sampler and ensure that it is pushed in all the way.

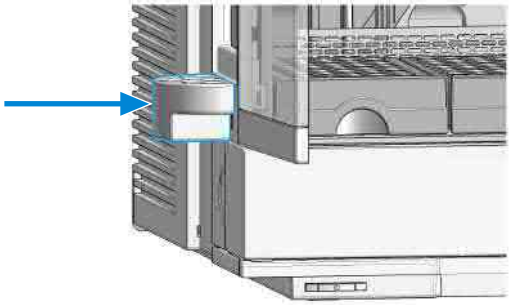

b Install the disposal tube.

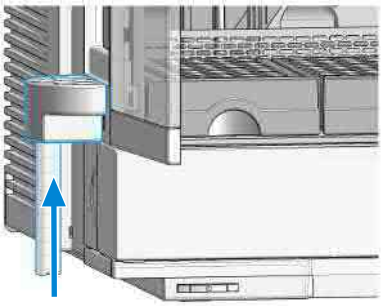

3 Close the doors.

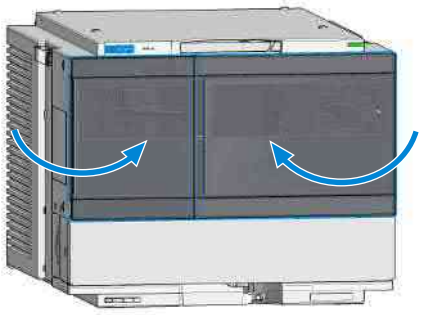

4 Configure the External Tray in the online view of the Chromatographic Data System: right-click on the sampler dashboard and select **Modify** > **External Tray** . In the dialog, select the **External Tray installed** check box.

Choice of Vials and Caps

Compatible Vials and Caps for the 2 mL Vial Drawers

List of Compatible Vials and Caps

For reliable operation vials used with the autosampler must not have tapered shoulders or caps that are wider than the body of the vial. The vials in Crimp Top Vials on page 130, Snap Top Vials on page 131 and Screw Top Vials on page 131 and caps in Crimp Caps on page 132, Snap Caps on page 132 and Screw Caps on page 132 (shown with their Part numbers) have been successfully tested using a minimum of 15,000 injections with the autosampler.

Crimp Top Vials

p/n	Description
5181-3375	Crimp Top Vial, 2 mL, clear glass, 100/Pack
5183-4491	Crimp Top Vial, 2 mL, clear glass, 1000/Pack
5182-0543	Crimp Top Vial, 2 mL, clear glass, write-on spot, 100/Pack
5183-4492	Crimp Top Vial, 2 mL, clear glass, write-on spot, 1000/Pack

p/n	Description
5183-4494	Crimp Top Vial, 2 mL, clear glass, write-on spot, 100/Pack (silanized)
5181-3376	Crimp Top Vial, 2 mL, amber glass, write-on spot, 100/Pack
5183-4493	Crimp Top Vial, 2 mL, amber glass, write-on spot, 1000/Pack
5183-4495	Crimp Top Vial, 2 mL, amber glass, write-on spot, 100/Pack (silanized)
5182-0567	Crimp/Snap Top Vial, 1 mL, polypropylene, wide opening, 100/Pack
5183-4496	Crimp Top Vial, 1 mL, polypropylene, wide opening, 100/Pack (silanized)
9301-0978	Crimp top vial, 250 µL, polypropylene, wide opening, 1000/Pack

Snap Top Vials

p/n	Description
5182-0544	Snap Top Vial, 2 mL, clear glass, 100/Pack
5183-4504	Snap Top Vial, 2 mL, clear glass, 1000/Pack
5183-4507	Snap Top Vial, 2 mL, clear glass, 100/Pack (silanized)
5182-0546	Snap Top Vial, 2 mL, clear glass, write-on spot, 100/Pack
5183-4505	Snap Top Vial, 2 mL, clear glass, write-on spot, 1000/Pack
5183-4508	Snap Top Vial, 2 mL, clear glass, write-on spot, 100/Pack (silanized)
5182-0545	Snap Top Vial, 2 mL, amber glass, write-on spot, 100/Pack
5183-4506	Snap Top Vial, 2 mL, amber glass, write-on spot, 1000/Pack
5183-4509	Snap Top Vial, 2 mL, amber glass, write-on spot, 100/Pack (silanized)

Screw Top Vials

p/n	Description
5182-0714	Screw Cap Vials, 2 mL, clear glass, 100/Pack
5183-2067	Screw Top Vial, 2 mL, clear glass, 1000/Pack
5183-2070	Screw Top Vial, 2 mL, clear glass, 100/Pack (silanized)
5182-0715	Screw Top Vial, 2 mL, clear glass, write-on spot, 100/Pack
5183-2068	Screw Top Vial, 2 mL, clear glass, write-on spot, 1000/Pack

p/n	Description
5183-2071	Screw Top Vial, 2 mL, clear glass, write-on spot, 100/Pack (silanized)
5182-0716	Screw Cap Vial, 2 ml, amber glass, write-on spot, 100/Pack
5183-2069	Screw Top Vial, 2 mL, amber glass, write-on spot, 1000/Pack
5183-2072	Screw Top Vial, 2 mL, amber glass, write-on spot, 100/Pack (silanized)

Crimp Caps

p/n	Description
5181-1210	Crimp Cap, silver aluminum, septum (clear PTFE/red rubber), 100/Pack
5183-4498	Crimp Cap, silver aluminum, septum (clear PTFE/red rubber), 1000/Pack
5181-1215	Crimp Cap, blue aluminum, septum (clear PTFE/red rubber), 100/Pack
5181-1216	Crimp Cap, green aluminum, septum (clear PTFE/red rubber), 100/Pack
5181-1217	Crimp Cap, red aluminum, septum (clear PTFE/red rubber), 100/Pack

Snap Caps

p/n	Description
5182-0550	Snap Cap, clear polypropylene, septum (clear PTFE/red rubber), 100/Pack
5182-3458	Snap Cap, blue polypropylene, septum (clear PTFE/red rubber), 100/Pack
5182-3457	Snap Cap, green polypropylene, septum (clear PTFE/red rubber), 100/Pack
5182-3459	Snap Cap, red polypropylene, septum (clear PTFE/red rubber), 100/Pack

Screw Caps

p/n	Description
5182-0717	Screw Cap, blue polypropylene, septum (clear PTFE/red rubber), 100/Pack

p/n	Description
5182-0718	Screw Cap, green polypropylene, septum (clear PTFE/red rubber), 100/Pack
5182-0719	Screw Cap, red polypropylene, septum (clear PTFE/red rubber), 100/Pack
5182-0720	Screw Cap, blue polypropylene, septum (clear PTFE/silicone), 100/Pack
5182-0721	Screw Cap, green polypropylene, septum (clear PTFE/silicone), 100/Pack
5182-0722	Screw Cap, red polypropylene, septum (clear PTFE/silicone), 100/Pack

Compatible Vials and Caps for the 6 mL Vial Drawer

NOTE For reliable operation of the sampler, the combined height of the vial and cap should never exceed 40 mm.

Screw Top Vials and Caps

p/n	Description
9301-1377	Screw Top Vial, 6 mL, clear glass, flat bottom, 100/Pack
5188-5369	Screw Top Vial, 5 mL, clear glass, high recovery, 100/Pack
9301-1379	Screw Cap, 16 mm, w/o septum, for 6 mL vials, 100/Pack
9301-1378	Septum, PTFE/silicone, for 16 mm caps, 100/Pack
5188-2758	Septum, preslit, PTFE/silicone, for 16 mm caps, 100/Pack

Crimp Top Vials and Caps

p/n	Description
9301-1419	Crimp Top Vial, 6 mL, clear glass, flat bottom, 100/Pack
9301-1425	Crimp Cap, silver aluminum, septum (PTFE/silicone), 100/Pack

Prepare the Module

To achieve best performance of the module, follow these rules.

1 When using the module in a system with a vacuum degassing unit, shortly degas your samples before using them in the module.

2 Filter samples before use in a Agilent InfinityLab LC Series system. Use 5067-6189 (InfinityLab Inline Filter (0.3 µm)) for inline filtering.

3 When using buffer solutions, flush the system with water before switching it off.

4 Check the module plungers for scratches, grooves and dents when changing the piston seal. Damaged plungers cause micro leaks and will decrease the lifetime of the seal.

5 Solvent Information - Observe recommendations on the use of solvents, see Solvent Information on page 401.

6 Priming and Purging the System - When the solvents have been exchanged or the system has been turned off for a certain time (for example, overnight) oxygen will re-diffuse into the solvent channel. Therefore priming and purging of the system is required before starting an application.

Setting Up the Vialsampler

The setup of the Vialsampler is shown with the Agilent OpenLab ChemStation C.01.07. Depending on the controller (e.g. Agilent Local Controller, OpenLab EZChrom, Masshunter) the screens look different.

NOTE This section describes the Vialsampler settings only. For information on the software or other modules refer to the corresponding documentation.

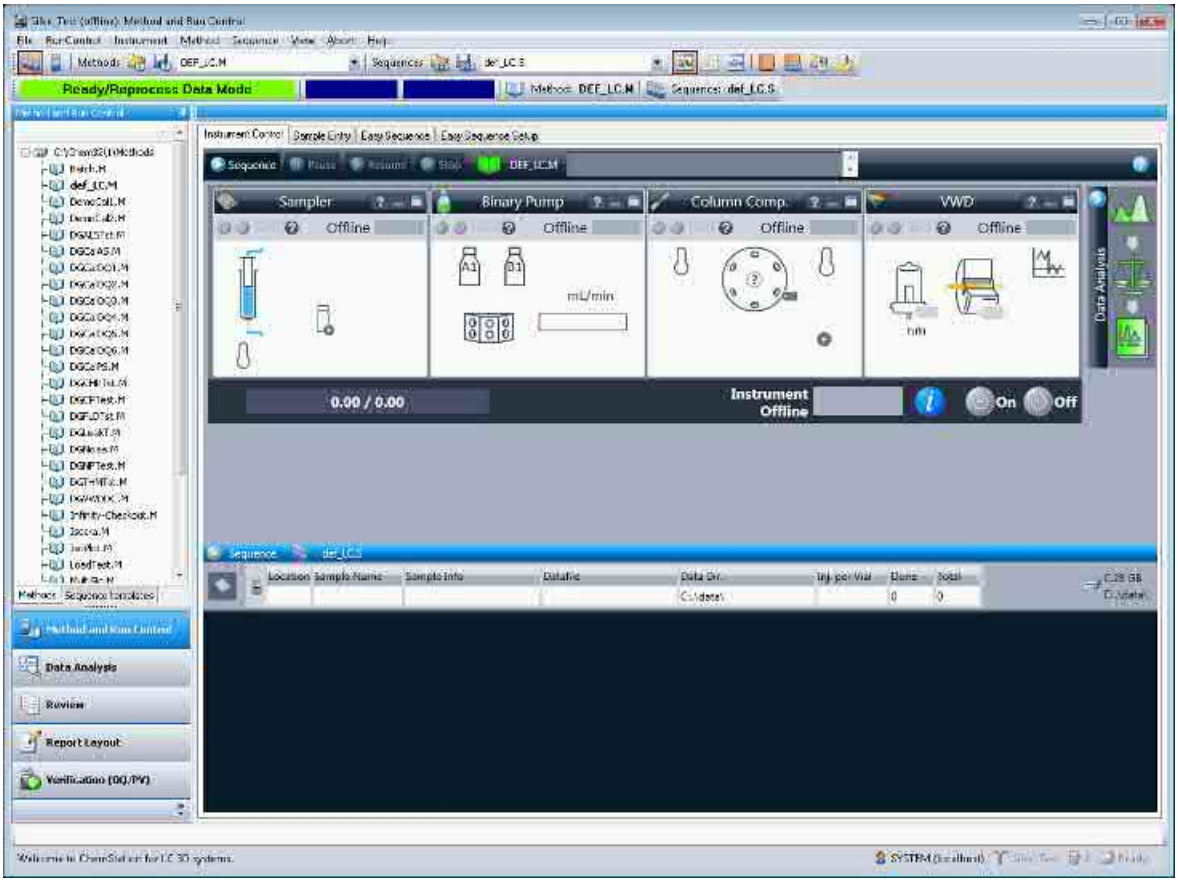

Figure 20: ChemStation Method and Run Control

After successful load of the OpenLab ChemStation, you should see the module as an active item in the graphical user interface (GUI).

Table 18: The Vialsampler user interface

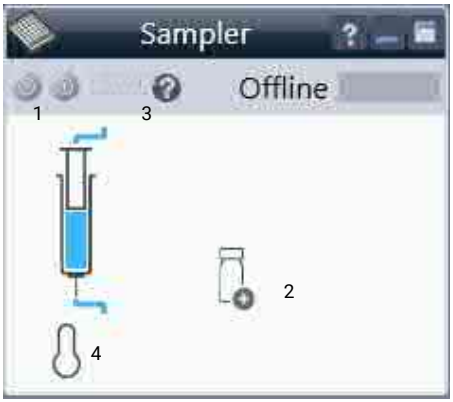	Within the sampler user interface, there are active areas. If you move the mouse cursor across the icons (tray, EMF button), the cursor will change and you may click on the icon to 1. Turn on/off the sampler 2. Check which sample drawers are installed 3. Get the status of the **EMF** (Early Maintenance Feature) 4. Cooling Temperatur (if Sample Thermostat is installed) Current instrument information on: • Injection volume • Sample location
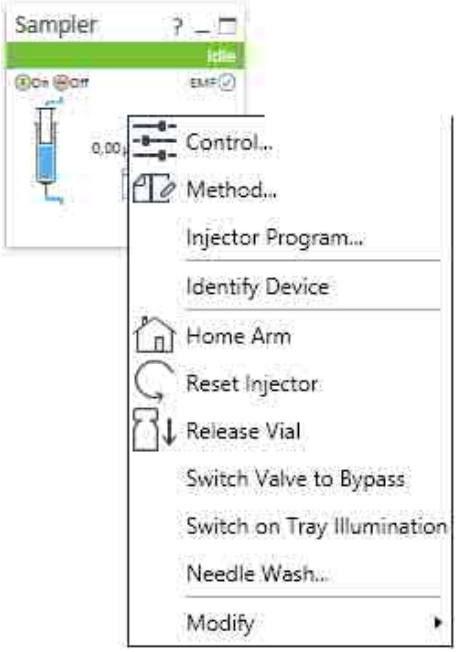	A right-click into the Active Area will open a menu with the option to adjust the following parameters: • Show the **Control** User Interface (special module settings). See Control Settings on page 137. • Show the **Method** User interface (same as via menu **Instrument** > **Set up Instrument Method** > **Setup G7129B**). See Method Parameter Settings on page 138. • Injector Program When you activate a pretreatment/injector program, it replaces the standard injection cycle. See Using an Injector Program on page 180 • Identify Device • Home Arm • Reset Injector • Release Vial • Switch Valve to Bypass • Switch on Tray Illumination • Needle Wash: allows you to wash the needle without modifying your current method. The needle wash specified in this dialog box is carried out immediately. • Modify ◦ Flow Path: for the sample loops, needle seat, extension loops and metering devices ◦ External Tray ◦ Temperature Mode

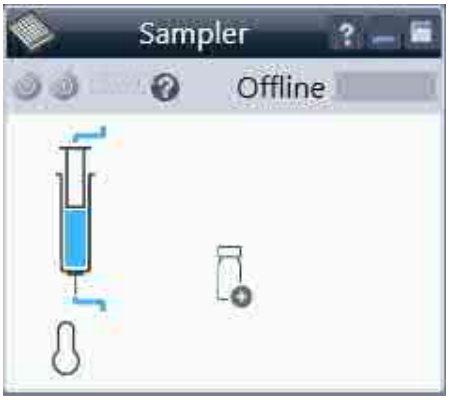

Module Status shows Run / Ready / Error state and “Not Ready text” or “Error text”

- **Error** (Red)
- **Not ready** (yellow)
- **Ready** (green)
- **Pre run**, **Post run** (purple)
- **Run** (blue)
- **Idle** (green)
- **Offline** (dark gray)
- **Standby** (light gray)

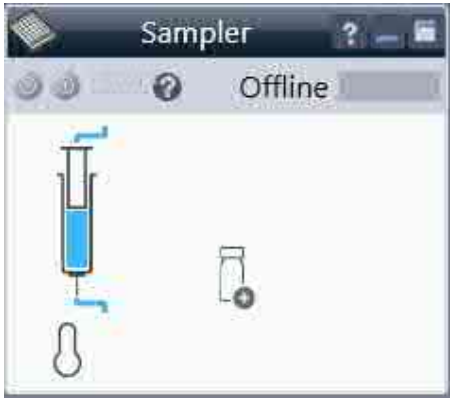

EMF Status shows Run / Ready / Error state and “Not Ready text” or “Error text”

- Offline (gray)
- Ok
  No Maintenance required (green)
- EMF warning. Maintenance might be required (yellow)
- EMF warning. Maintenance required (red)

NOTE For additional help and support, highlight the desired area and press the **F1** key. A help screen will open with additional information and documentation about the topic.

NOTE The Vialsampler configuration is done in the online module dashboard context menu, not in the instrument configuration view.

Control Settings

The control settings are available via right click on the active area of the graphical user interface, see Table 18 on page 136

Table 19: Control settings

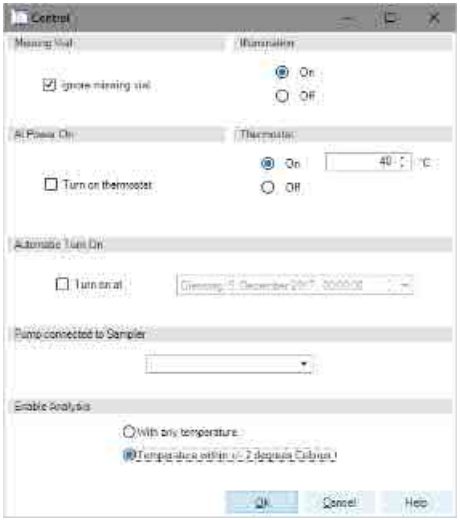

Control settings

The Sampler control parameters are in the following sections:

- Missing Vial
  Mark the **Ignore missing vial** check box to specify that, if a vial is missing, the injector ignores it and continues with a 6-second dummy run. The message "Missing vial <x>" is logged, and the system continues with the next injection.
- Illumination
  Toggles the illumination of the sample area, On or Off.
- At Power On
  The section is available when a thermostat is installed and configured. Mark the **Turn on Thermostat** check box to specify that the thermostat is switched on automatically when the instrument is switched on.
- Thermostat
  The section is available when a thermostat is installed and configured and the Constant temperature mode is selected.
  Select **On** to switch on the thermostat. Specify the required temperature in the adjacent field. The specified temperature must be at least 5 °C below ambient for proper temperature control.
  Select **Off** to switch off the thermostat.
- Automatic Turn On
  You can set a date and time at which the thermostat switches on automatically.
- Pump connected to Sampler
  Use this section to specify the pump that is used with the Sampler. If more than one pump is configured, display the drop-down list and select the appropriate pump from the list.
- Enable Analysis
  This feature requires LC & CE Drivers A.02.19 or newer and is only available for the Sample Thermostat. With this function, you can specify if the analyses should start **With any temperature** or only when the **Temperature is within ± 2 °C** range of the setpoint temperature.
  NOTE: The Enable Analysis section is disabled when Not controlled is selected in the Temperature section.

NOTE

For additional help and support, highlight the desired area and press the **F1** key. A help screen will open with additional information and documentation about the topic.

Method Parameter Settings

The method parameter settings are available via right click on the active area of the grafical user interface.

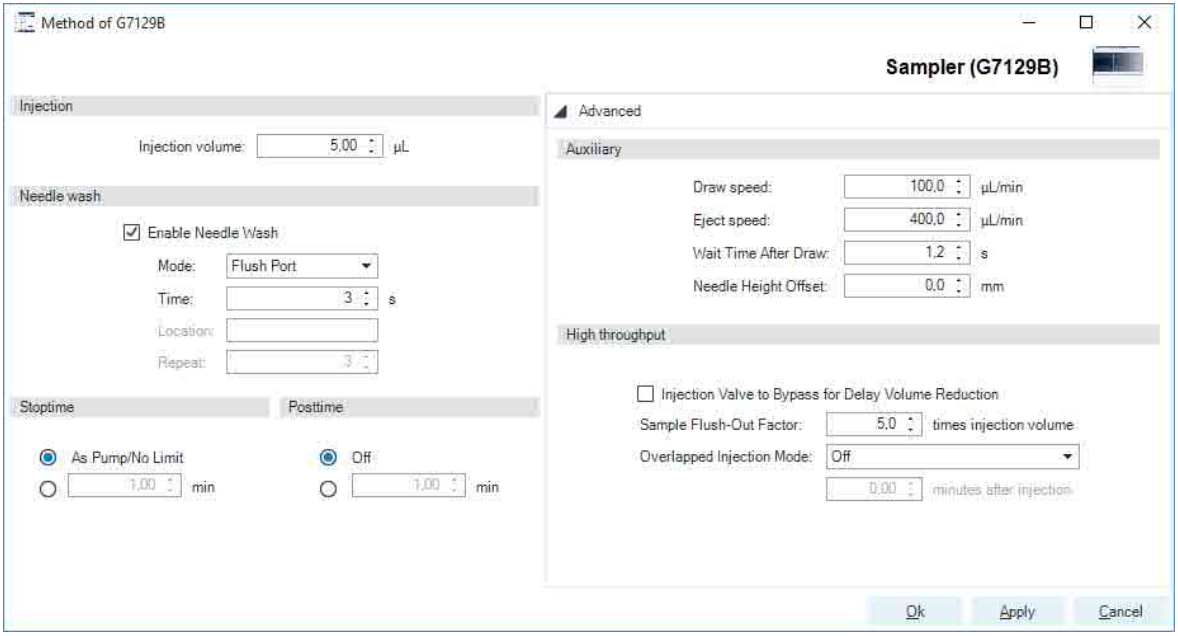

Figure 21: Method parameter settings

Table 20: Method parameter settings

Injection Injection volume: 5,00 µL	Injection Specify the injection volume (in µL) in the **Injection Volume** field. The injection volume limits depend upon the configuration settings of the autosampler. Note that this setting is ignored when Pretreatment/Injector Program is defined.
Needle wash ☑ Enable Needle Wash Mode: Flush Port Time: 3 s Location: Repeat: 3	Needle Wash Mark the **Enable Needle Wash** check box to specify an injection with needle wash. The following wash parameters can be specified: • **Mode**: Select the wash location by clicking the down arrow and selecting the needle wash mode from the list. You can select from Flush Port (default location) or Wash Vial. • **Time**: This field is enabled only if you have selected Flush Port. Specify a flush time in seconds between 1 and 100 in steps of 1. • **Location**: enabled only if you have selected a Wash Vial. Allows you to specify a wash location in the format Vial X, where X is the vial number. Specify well locations in the format P<Plate #>-<Row Character><Column Number>, for example, P1-A1. The values of <Row Character> and <Column Number> depend on the wellplate type. • **Repeat**: available only if you have selected Wash Vial. You can specify up to 10 repeat washes.
Stoptime ◉ As Pump/No Limit ○ 1,00 min Posttime ◉ Off ○ 1,00 min	**Stoptime**: enables you to set the time that the analysis stops. Limits: 0.01 through 99999 min or **As Pump/No Limit**. **Posttime**: the Vialsampler remains in a post-run state during the Posttime to delay the start of the next analysis. A Posttime period can be used to allow the column to equilibrate after changes in solvent composition (for example after gradient elution). Limits: 0.01 through 99999 min or **Off**.

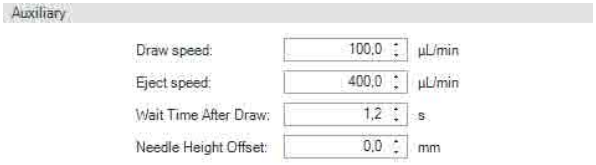

Auxiliary

- Draw Speed: determines the rate at which the plunger draws sample from the vial. Set the speed to an appropriate value for your sample. For viscous samples, use a slow Draw Speed.
- Eject Speed: determines the rate at which the plunger ejects sample from the metering device. If you are injecting large volumes of sample, setting a high Eject Speed will shorten the time needed for an injection cycle. For viscous samples in combination with multidraw, use a slow Eject Speed.
- Wait Time After Draw: ensures that the temporary vacuum, which originates from the drawing of liquid from the sample vial, dissipates. The needle stays first on the seat for the specified time, then after drawing sample from the vial, remains there for the specified time.
- Needle Height Offset: a vertical offset that enables you to position the needle a specific distance (in mm) away from its standard position. The Offset function is useful when analyzing very small sample volumes, or when only a specific part of the sample is required, for example, the top layer.

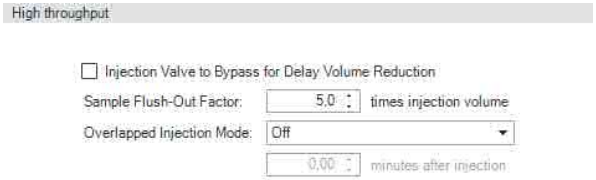

High Throughput

Injection Valve to Bypass for Delay Volume Reduction: Mark this check box to switch the flow from the injector from mainpass (main path) to bypass after injection has taken place. This reduces the delay volume for low volume techniques. You can specify the point during the analyses when the valve switches to bypass by setting the Sample Flush-out Factor.

Sample Flush-Out Factor: ensures that the sample is thoroughly flushed out of the syringe and past the capillary seat and valve. The Sample Flush-Out Factor is preset to 5.0 at the factory. The preset Sample Flush-Out Factor is correct for most methods. However, for unusually viscous samples, you should increase the Sample Flush-Out Factor to obtain the desired degree of flushing to prevent sample carryover.

Overlapped Injection Mode: provides faster throughput of samples by allowing the preparation of the next injection while the current injection is being completed. The following options can be selected from the drop-down list:

- Off: to switch off overlapped injection. Select When sample is Flushed Out to specify that the sample can be prepared directly after the current sample has been flushed out.
- Prefetch Vial: to specify that the next sample is fetched by the gripper while the current sample is running.
- Overlap Injection Cycle: to specify that the next sample is fetched and loaded into the sample loop while the current sample is running. Specify a time (in minutes) after injection when this process should be started.

NOTE For additional help and support, highlight the desired area in the user interface and press the F1 key. A help screen will open with additional information and documentation about the topic.

Injector Program

The pretreatment/injector program comprises a series of numbered lines, each specifying an operation that the autosampler carries out sequentially. When you activate a pretreatment/injector program, it replaces the standard injection cycle.

The following functions are available :

- Draw
- Eject

- Mix
- Inject
- Move
- Wait
- Valve
- Needle
- Wash
- Remote
- Wait For
- Repeat .. End Repeat
- Comment

Injector Workflows

Injector Workflows are templates for some typical injector programs. When activated, it replaces the standard injection cycle. Available templates:

- Dilution Series
- Dilution sequence series
- OPA/FMOC-protocol for AAA
- Sample spiking for direct injection
- ISTD spiking for sample vial

Module Configuration View

The module configuration settings are available via menu Instrument > Show ConfigUI

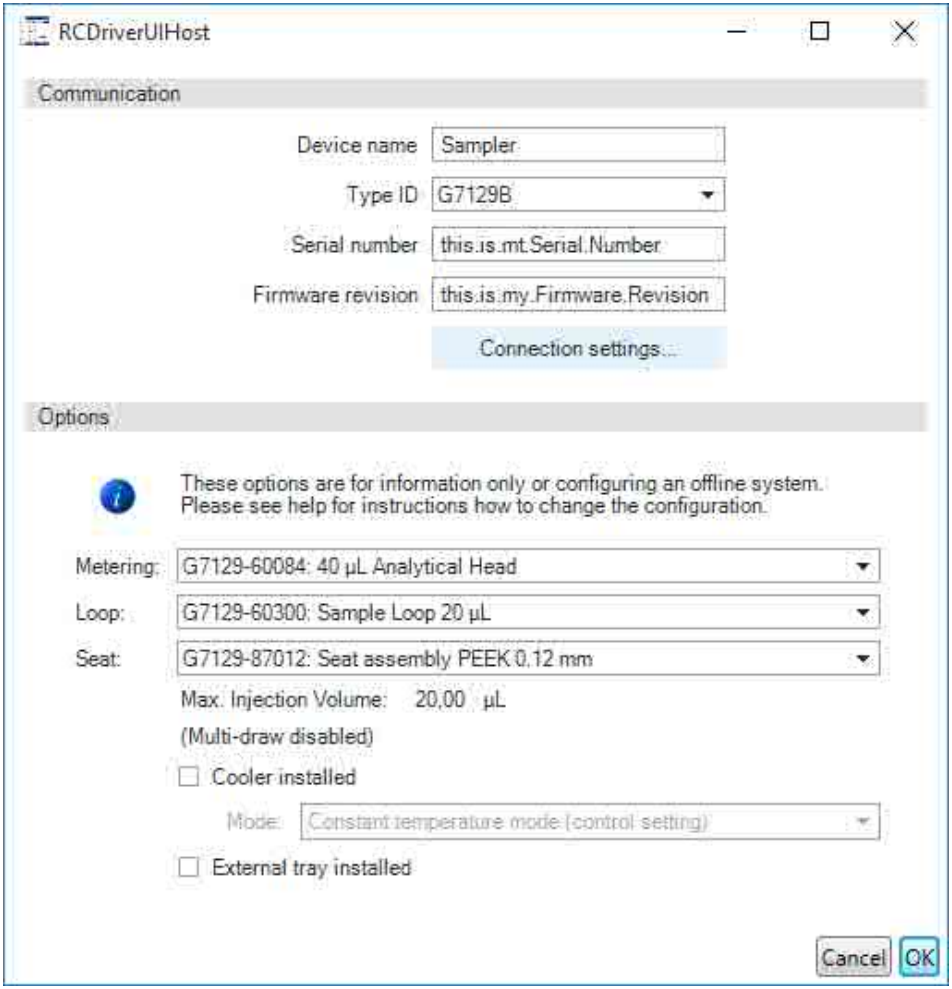

Figure 22: Configuration view

NOTE For additional help and support. Highlight the desired area and press the **F1** key. A help screen will open with additional information and documentation about the topic.

NOTE The Vialsampler configuration is done in the module dashboard context menu, not in the instrument configuration.

Preparing the Optional Integrated Column Compartment

The following section describes how to operate the Agilent Integrated Column Compartment.

Dashboard

When the Integrated Column Compartment (ICC) is installed in a Vialsampler and configured in the chromatography data system (CDS), a new tile appears on the dashboard, comprising a standalone graphical user interface (GUI) for the ICC.

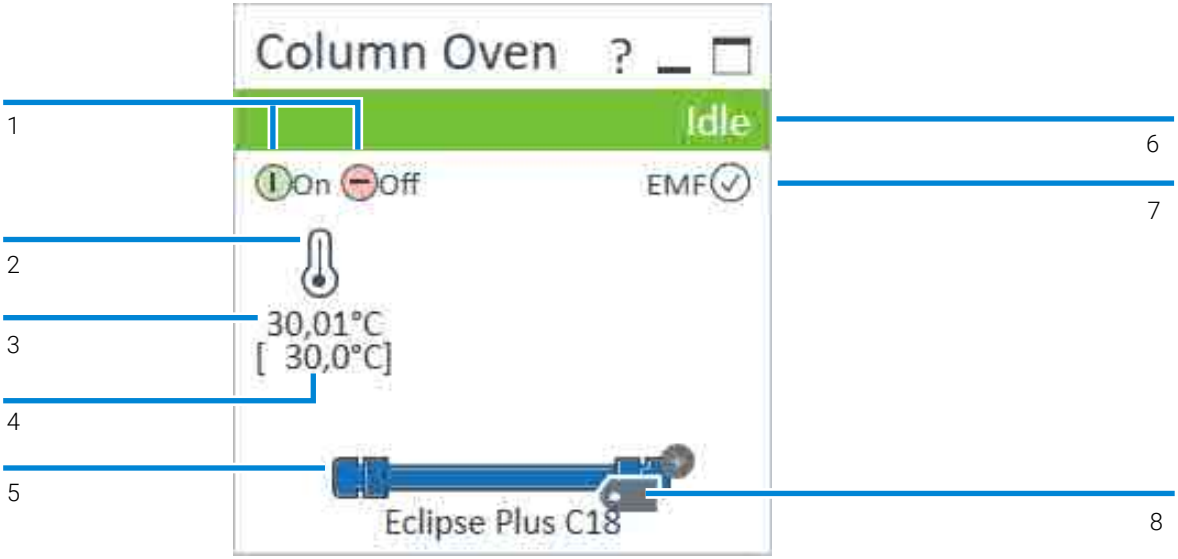

1	ICC: Turn On/Off
2	ICC: Heater Status (On/Off)
3	ICC: Actual Temperature
4	ICC: Set Temperature
5	ICC: Column Information
6	ICC: Status Indicator
7	ICC: Early Maintenance Feedback (EMF) Status
8	ICC: Column Identification Tag Recognised

Control Interface

Right-clicking on the sampler GUI opens the control interface, where control and method parameters can be edited, column assignment modified, and special commands executed.

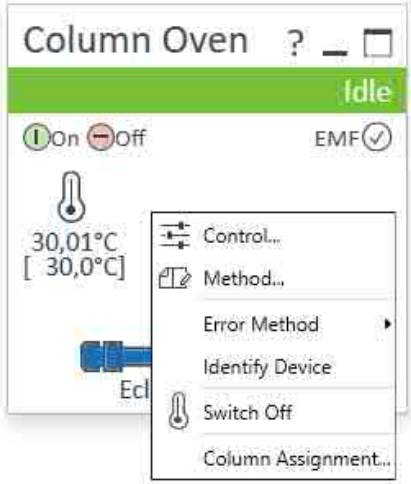

Control

The Control dialog box enables the user to change some control-specific settings for the ICC:

- Thermostat:
  - On: The ICC turns on and the system starts to regulate the temperature of the column oven towards the setpoint.
  - Off: The ICC turns off.
- At Power On:
  - Turn on thermostat: The ICC turns on automatically upon powering on the sampler.
- Automatic Turn On:
  - Turn on at: The ICC turns on automatically at the specified time and date.

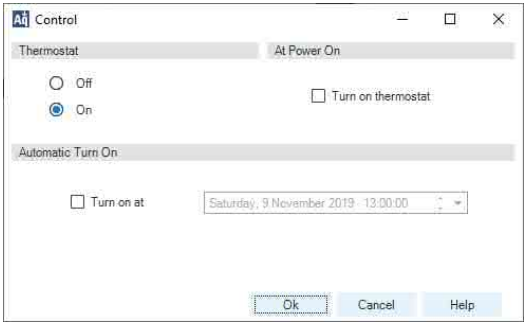

Method Parameters

The **Method** dialog box enables the user to change the method parameters relevant for the ICC:

- Temperature:
  - Not Controlled: The temperature of the column oven stays uncontrolled.
  - At specified temperature (**°C**): The temperature of the column oven is regulated to stay at the setpoint temperature specified.

NOTE Valid inputs are 10 to 80 °C in increments of 0.1 °C.

  - Unchanged: The temperature setting stays unchanged, meaning that the setting currently stored in the system is used by the method.
- Valve Position/Column: This section provides information about the location of the column that is being used for the given method.
  - Enforce column for run: Marking this checkbox restricts the execution of the method to a specific column type, identified by its product number.
- Stoptime:
  - As Pump/Injector: The ICC uses the same stoptime setting as specified for the pump or the sampler.
  - After specified time (**min**): The stop time defines a time limit for the analysis, after which all method parameters are reset to initial values.

- Posttime:
  - Off: No post-run period is applied.
  - For specified time (min): After the analysis, the system stays in the post-run state for the specified time. Using a post-time period can be beneficial when the column needs to be re-equilibrated before starting the next analysis (for example, gradient elutions).

NOTE

For Stoptime and Posttime, valid inputs are 0.01 to 99999 minutes in increments of 0.1 min.

- Enable Analysis:
  - With any temperature: The analysis starts regardless of the actual column oven temperature.
  - When temperature is within: The analysis starts only when the actual column oven temperature is within the specified range of the setpoint temperature.
- Timetable: This feature enables the user to use programmed changes to control the oven temperature during the course of the analysis.

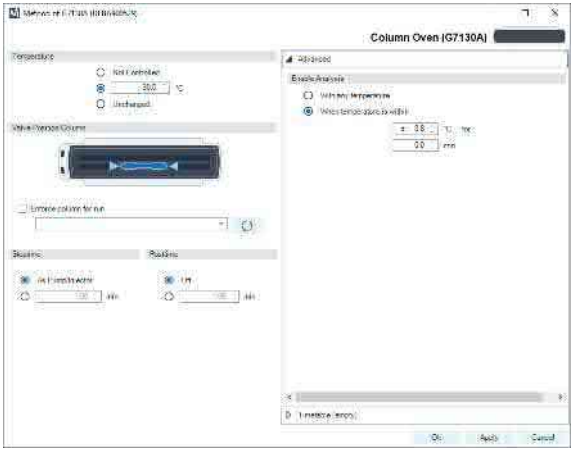

Online Signals

In the **Online Signals** tab of the CDS, the actual temperature of the column oven can be configured and plotted together with the other instrument actuals. This enables the user to have a better overview of how the temperature changes over time.

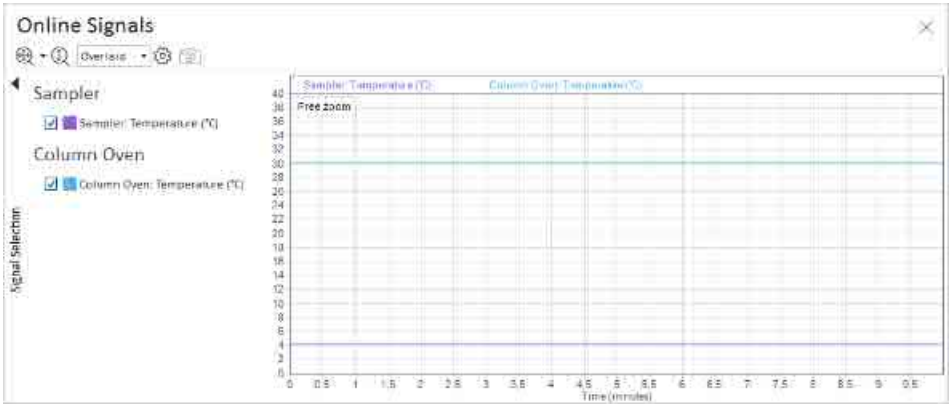

Column Assignment

Clicking on **Column Assignment** in the control interface opens a dialog box, where the column information can be edited:

- **Plumbing**: The user can specify whether the column is located in the **Upper** or **Lower** position of the ICC heat exchanger, or indicate that no column is present in the ICC at all (**None**).
- **Visualization**: This section gives a visual representation of the column configuration in accordance with the information in the **Plumbing** section.
- **Column Tag Information**: This section holds information on the physical properties of the columns installed in the ICC and their usage (see Column Tag Information Table on page 151 for more information). The fields of the table can be edited and the information therein used for reporting purposes even if no column identification tags are present. This is often referred to as *soft tagging*. When the Column ID Upgrade Kit is installed and a column identification tag is present, the content of the table corresponds to the information stored on the tag. This is referred to as *hard tagging*.

NOTE By default, the **Column Tag Information** table is truncated and only columns up to and including **Injections** are displayed. Clicking on **>>** in the top right corner displays the whole table.

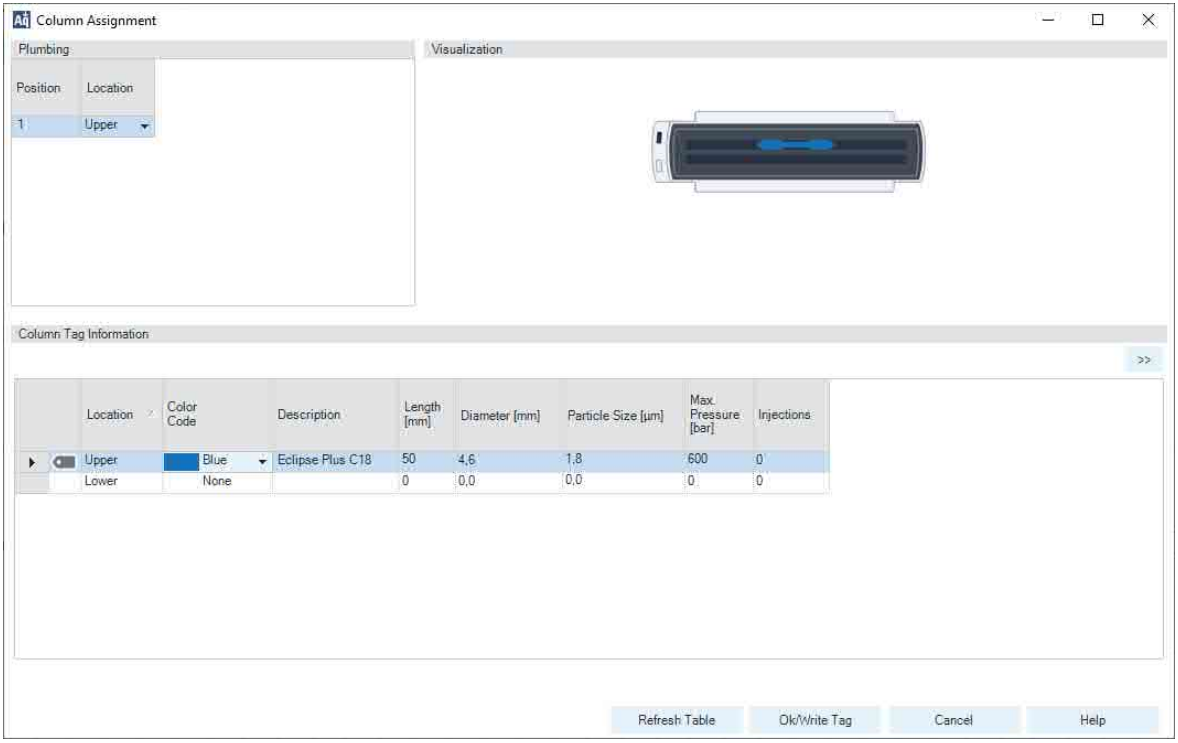

Column Tag Information Table

The **Column Tag Information** table is part of the **Column Assignment** dialog box, which can be prompted by clicking on the corresponding button of the control interface.

Using Column Identification Tags

The Agilent InfinityLab Column Identification Tag is designed to enable the automatical detection of the columns installed in the column thermostat and help the user to track the usage of the columns in the laboratory. The column identification tag contains information about not only the physical properties of the column but also about its usage. Two types of information are stored:

- *Static* fields contain information on the physical characteristics of the column such as the length, internal diameter and particle size. Typically, this information stays the same for the lifetime of the column.
- *Dynamic* fields contain information on the usage of the column, such as the number of injections and maximum measured temperature. The information stored in the dynamic fields will be automatically updated each time a new analysis is performed with the column. These fields are read-only from the perspective of the user, meaning that their content cannot be manually edited or erased.

NOTE The information in the dynamic fields cannot be erased by any means.

For *pre-labeled* Agilent columns, the static fields are pre-populated with information and set to read-only for compliance reasons, except for the **Void Volume** and **Comment** fields. The *dynamic* fields are blank by default and will be automatically edited by the system upon using the column.

On the contrary, *custom* column identification tags enable the user to edit the content for all *static* fields, as long as the tag is not sealed. This can be beneficial when using non-Agilent columns. After entering all the necessary information, the custom tag can be sealed to prevent any further modification of the content in the static fields. The content of the *dynamic* fields cannot be manually edited or erased, not even for the *custom* tags.

NOTE When the column identification tag is sealed, the static fields will become write-protected and only the dynamic fields will remain available for updating. The only exceptions from this are the *static* fields **Void Volume** and **Comment**.

There are two ways to edit the content of custom column identification tags:

- One way is to type in all the necessary information manually, using the **Column Assignment** tab of the control interface (see Column Assignment on page 150 for more information).

- The other one is to import the data from a database (an existing catalog or inventory, or the Agilent columns guide). This option is available only for the OpenLab CDS ChemStation (C.01.07 SR2 or higher).

NOTE

It may take up to several seconds for the column tag to be read and the tables to be updated.

When plugging a new tag into the tag reader, the content that is stored on it will be automatically imported into the **Edit Columns** tab (only for OpenLab CDS ChemStation, see Using Column ID Tags with ChemStation on page 153 for more information) and the **Column Assignment** tab of the control interface (see Column Assignment on page 150 for more information).

Documents about this

- Agilent InfinityLab LC Series Vialsamplers User Manual (https://www.agilent.com/cs/library/usermanuals/public/G7129-Vialsamplers-UseMa-en-SD-29000242.pdf)

Using Column ID Tags with ChemStation

1 In the **Method and Run Control** view of the Agilent OpenLAB CDS ChemStation Edition, select **Columns** from the **Instrument** menu.

The **Edit Columns** dialog box is displayed.

If the **Edit Columns** table is empty, go straight to Step 3.

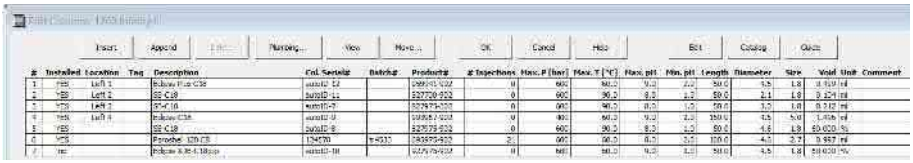

Figure 23: The ChemStation **Edit Columns** table

2 Select a line in the table that contains column information as close as possible to the column you are adding. The selected line acts as a template for the new column.

NOTE

Column catalogs are available only in OpenLab CDS ChemStation Edition C.01.07 SR2 and above with drivers A.02.14 and above. Click the **Catalog** button to display a dialog box that allows you to choose how to load the catalog into the table.

3 Click the **Insert** button to insert a line above the currently selected line, or the **Append** button to add a line to the end of the table.

The new line contains a copy of the information in the template line.

4 Click the **Edit** button to display a dialog box that allows you to edit the column-specific information such as **Serial Number**, **Batch Number** and **Description.**

5 Add or edit the other column-specific information (for example, maximum pressure, maximum temperature, length, diameter, particle size) in the **Edit Columns** table.

6 If the column is installed and will be used in the Multicolumn Thermostat, select **YES** in the **Installed** column.

7 Click the **Plumbing** button.

The **Column Assignment** dialog box is displayed.

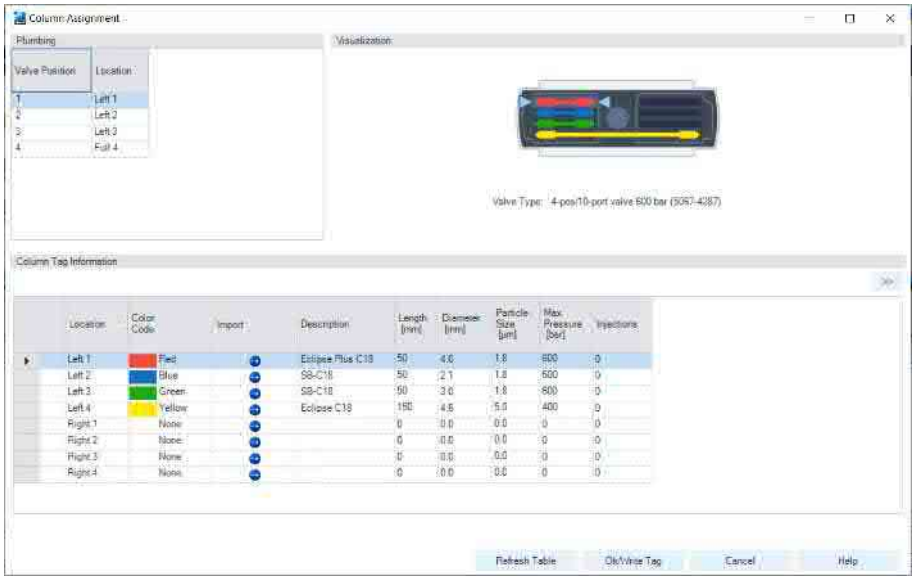

Figure 24: **Column Assignment** dialog box

The **Column Assignment** dialog box allows you to specify and review detailed information about the columns attached to each position in the column compartment. The information in the **Column Assignment** dialog box is in three sections:

1. The **Plumbing** section contains a table where you can specify the plumbing assignment for each valve position.
2. The **Visualization** section gives a visual representation of the Multicolumn Thermostat configuration.
3. The **Column Tag Information** table shows the information stored on the column tag(s) of the installed column(s). For more details, see The Column Tag Information Table on page 160.

8 Click in the **Import** column of an empty line in the **Column Tag Information** table.

The list of columns from the ChemStation's **Edit Columns** table is displayed.

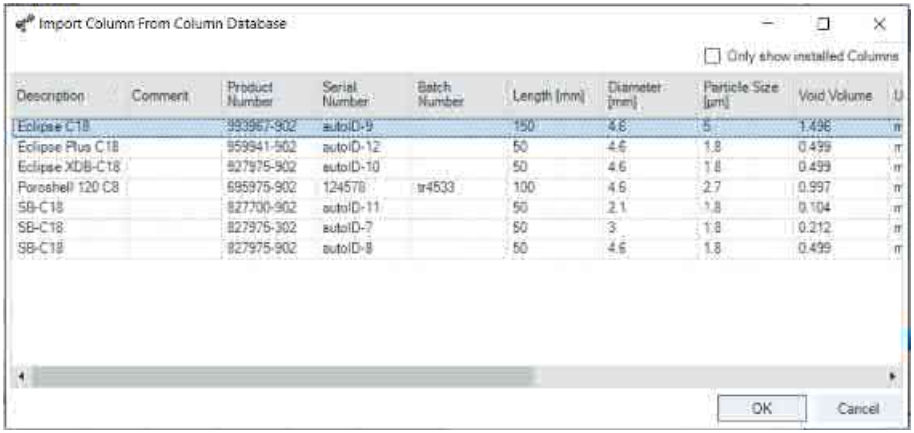

Description	Comment	Product Number	Serial Number	Batch Number	Length [mm]	Diameter [mm]	Particle Size [µm]	Void Volume	U
Eclipse C18		959967-902	autoID-9		150	4.6	5	1.496	m
Eclipse Plus C18		959941-902	autoID-12		50	4.6	1.8	0.499	m
Eclipse XDB-C18		927975-902	autoID-10		50	4.6	1.8	0.499	m
Poroshell 120 C8		695975-902	124578	tr4533	100	4.6	2.7	0.997	m
SB-C18		827700-902	autoID-11		50	2.1	1.8	0.104	m
SB-C18		827975-302	autoID-7		50	3	1.8	0.212	m
SB-C18		827975-902	autoID-8		50	4.6	1.8	0.499	m

Figure 25: The list of columns from the ChemStation's **Edit Columns** table

To reduce the list to only those columns that are marked as **Installed**, mark the **Only show installed Columns** check box.

9 Select the column information to import from the list of columns and click **OK**.

The column information is imported into the **Column Tag Information** table.

NOTE It may take several seconds before the information appears in the **Column Tag Information** table.

NOTE The characters semicolon (;), single quote (') and double quote (") are invalid for the **Column Tag Information** table. If these characters are used in any field of the table, an error is displayed, and **OK/Write Tag** button is disabled. You must delete all invalid characters before you can write the data to the tag.
The **Description** and **Comment** fields are limited to 32 characters in the **Column Tag Information** table.

NOTE At this stage, you can assign a color to the column using the drop-down list in the **Color Code** column; this information is displayed in the **Visualization** panel, but is not written to the tag.

10 Click the **>>** button at the top right of the **Column Tag Information** table to show the hidden table columns. Use the horizontal scroll bar to access the columns at the right of the table.

11 If all the information for the column is correct, click the **Ok/Write Tag** button to write the information to the column ID tag.

The information in the ChemStation's **Edit Columns** table is also updated.

12 You can edit the information on the column ID tag using the ChemStation **Edit Columns** table. When you have finished editing the information, repeat steps 7 to 9 to update the information in the tag.

13 When you are sure that you will not make any more changes to the information in the tag, you can irrevocably seal the tag to set all static fields to read-only. Right-click in the appropriate line in the **Column Tag Information** table and select **Seal Column Tag** from the context menu.

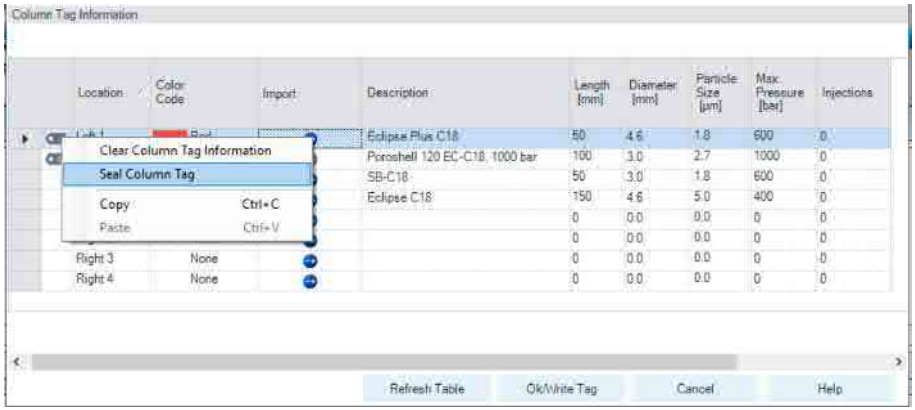

Figure 26: The **Column Tag Information** table context menu

NOTE

Once a column ID tag has been sealed, the static fields cannot be edited. Until the column ID tag has been sealed, you can delete all information in static fields on the tag using the **Clear Column Tag Information** command from the context menu.

The sealed column is shown in the **Column Tag Information** table with the icon at the beginning of the row. In the **Edit Columns** table of the ChemStation, it is shown with **Sealed** in the **Tag** column.

The **Plumbing** button of the ChemStation **Edit Columns** table displays the **Column Assignment** dialog box. It can also be displayed by selecting **Column Assignment** from the context menu of the column compartment Dashboard panel in the ChemStation's **Method and Control** view.

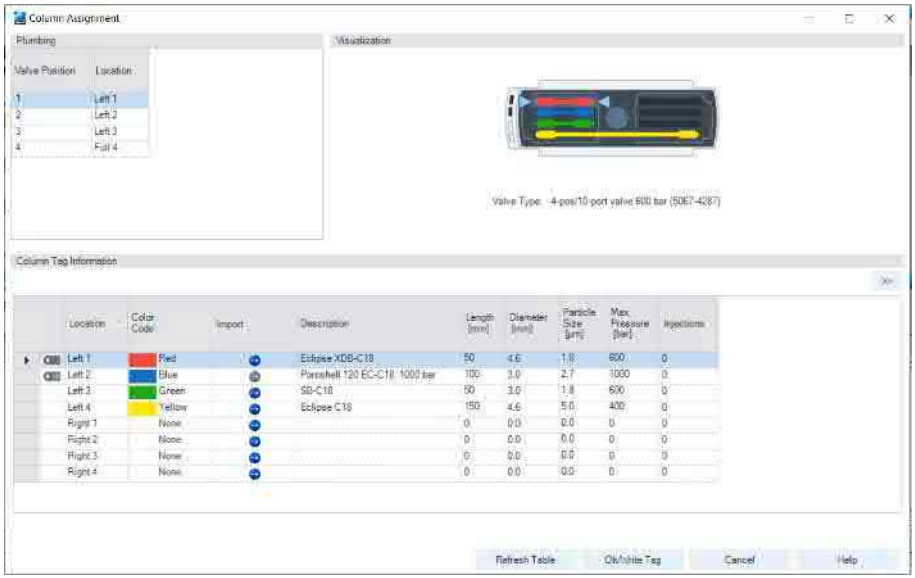

Figure 27: **Column Assignment** dialog box overview

The **Column Assignment** dialog box has three sections that give you information about the column:

- The **Plumbing** section shows the valve connections to the positions in the column compartment.

NOTE

Make the connections to give the shortest distances between the valve ports and the columns, and use a logical order (left column 1 to port 1-1', left column 2 to port 2-2' and so on). Avoid leaving unused ports between used ones.

- The **Visualization** section gives a visual representation of the configuration of the columns in the column compartment; the columns are color coded.

  - Place the mouse cursor over a column to display a tooltip of the column information from the column ID tag.
  - Click a column to highlight the column information in the **Column Tag Information** table.
- The **Column Tag Information** shows the information in the column ID tags for all columns in the configuration, including their location in the column compartment and their color codes.

The column compartment panel of the Dashboard in the ChemStation's **Method and Control** view also allows you a quick view of the column ID tag information.

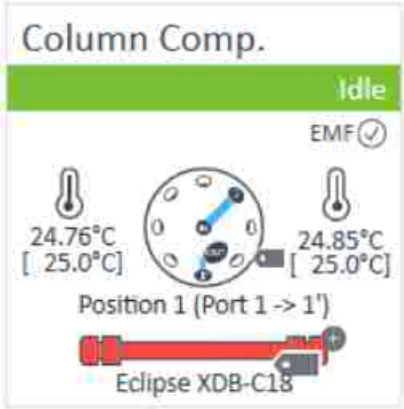

Figure 28: The dashboard panel of the column compartment

Place the mouse cursor over the column ID tag icon ( ); the tooltip shows the information currently stored on the column ID tag.

The column ID tag icon changes according to its state as described in The Column Tag Information Table on page 160.

Availability of Column Information

The ChemStation Columns Table

The **Edit Columns** dialog box, which you access using the **Columns** command of the **Instrument** menu in **Method and Run Control** view, shows the detailed information about the columns attached to each position in the device. The table contains all the column-specific information stored in the column ID tags (see Column Tag Information on page 162) plus the following possible additional columns:

Installed	**YES** when the column is installed in a device. **no** when the column is not installed in a device.
Location	Shows the location in the device to which the plumbing of the valve position leads.
Dev. Serial#	Present only for a valve thermostat cluster. Shows the serial number of the device that contains the column.
Tag	Shows if the column has column ID tag (**Used**), if it sealed (**Sealed**) or the column has no tag (empty).

The table includes not only the columns that are installed in the column thermostat device(s), but also the inventory of other available columns, for example, columns that have been used in the past. The ChemStation also provides a catalog of column types, which you can load into the **Edit Columns** table to act as templates for other columns.

The Column Tag Information Table

The **Column Assignment** dialog box, which you access using the **Column Assignment** command of the dashboard context menu, shows the detailed information about the columns attached to each position in the device. The dialog box includes the **Column Tag Information** table, which contains all the column-specific information stored on the column ID tags (see Column Tag Information on page 162) plus the following possible additional columns:

Tag Status	Shows the status of the column ID tag: • Empty: The position is empty or has a column without a column ID tag. • : A column with a column ID tag is installed at this position. • : A column with a sealed column ID tag is installed at this position. • : A column with a prelabeled column ID tag supplied by Agilent Technologies is installed at this position.
Location	Shows the location in the device to which the plumbing of the valve position leads. For a valve thermostat cluster, the **Column Host** (the device where the column is installed) is also shown.
Color Code	Shows the color representing the column currently occupying the valve position.
Import	Present only when the CDS is an Agilent OpenLab CDS ChemStation Edition. Click the icon to display a dialog box listing all the columns entered in the ChemStation's **Edit Columns** table, from which you can select appropriate information to import.

By default, only the **Column Tag Information** table columns up to and including the **Injection** column are displayed. Click the **>>** button at the top right of the table to show the full table.

Column Tag Information

The column ID tag contains the following information:

Field	Description	Type	Read/Write permission	
			pre-labeled tag	custom tag
Description	A description of the column.	Static	Read	Write
Length	The length of the column in mm.	Static	Read	Write
Diameter	The internal diameter of the column in mm.	Static	Read	Write
Particle Size	The particle size of the column packing material in µm.	Static	Read	Write
Maximum Pressure	The maximum pressure supported by the column.	Static	Read	Write
Number of Injections	The number of injections that have been made on the column.	Dynamic	Read	Read
Product Number	The product number of the column.	Static	Read	Write
Maximum Measured Temperature	The highest temperature (in °C) experienced by the column to date.	Dynamic	Read	Read
Maximum Temperature	The safe maximum operating temperature of the column (in °C).	Static	Read	Write
Minimum pH	The minimum pH supported by the column.	Static	Read	Write
Maximum pH	The maximum pH supported by the column.	Static	Read	Write
Void Volume (mL)	The void volume of the column and fittings.	Static	Write	Write
First Injection	The date and time of the first injection onto the column.	Dynamic	Read	Read
Recent Injection	The date and time of the most recent injection onto the column.	Dynamic	Read	Read
Manufacturing Date	The date of manufacture of the column.	Static	Read	Write
Agilent Column	Whether or not the column was supplied by Agilent Technologies.	Static	Read	Write
Serial Number	The serial number of the column.	Static	Read	Write
Batch Number	The batch number of the column.	Static	Read	Write
Tag Sealed	Whether or not all static fields except **Comment** and **Void Volume** are set irrevocably to read-only.	Static	Read	Write
Comment	A user-generated comment about the column.	Static	Write	Write

Preparing the Optional Sample Thermostat

The following section describes how to operate the Agilent InfinityLab Sample Thermostat using the Multisampler as an example for the hosting sampler. The operation principle is the same for any other sampler type.

Dashboard

The status indicator of the Sample Thermostat is incorporated in the graphical user interface (GUI) of the hosting sampler, which appears automatically when the unit is configured in the chromatography data system (CDS). When the thermostat is turned on, the set temperature and the actual temperature are also displayed.

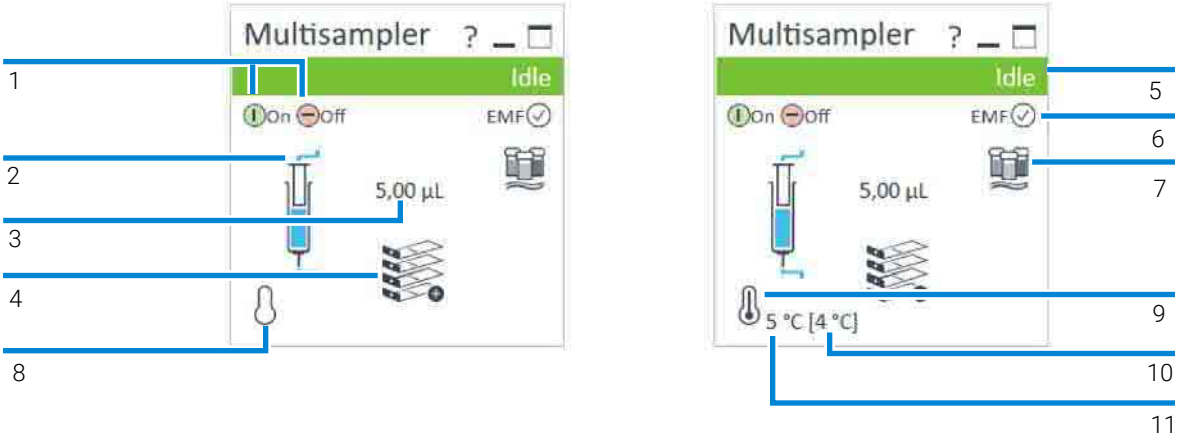

1	Sampler: Turn On/Off
2	Sampler: Analytical head configuration
3	Sampler: Injection volume
4	Sampler: Hotel configuration
5	Sampler: Status indicator
6	Sampler: Early Maintenance Feedback (EMF) status
7	Sampler: Multiwash installed
8	Thermostat: Status indicator (Off)
9	Thermostat: Status indicator (On)
10	Thermostat: Set temperature
11	Thermostat: Actual temperature

NOTE The actual temperature may deviate from the set temperature by up to 3 °C, depending on the temperature setting and ambient conditions.

NOTE If the actual temperature differs by more than ± 2 °C from the set temperature, a yellow highlight is visible around the temperature reading. This, however, will not prevent the system from starting a new analysis, unless the **Enable Analysis** > **Temperature within +/- 2 °C function** is selected.

Control Interface

Right-clicking the sampler GUI will prompt the control interface, where control and method parameters can be edited, configuration modified, and special commands executed.

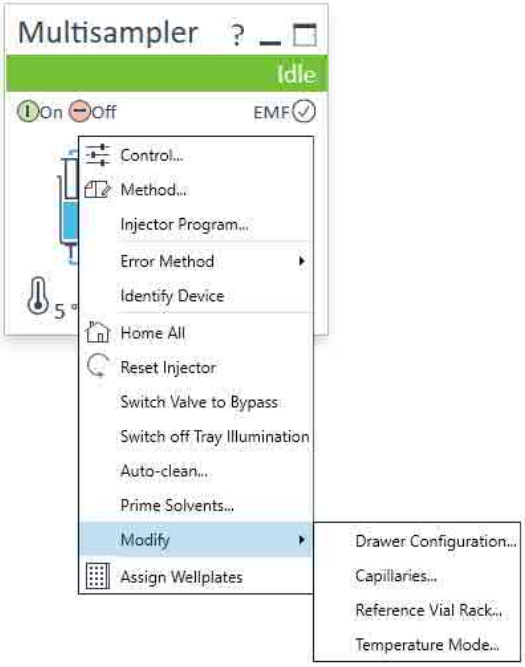

Control

With the Sample Thermostat installed, the **Control** dialog box of the hosting sampler will include the following thermostat-specific control options:

- At Power On:
  - **Turn On Thermostat**: The thermostat turns on automatically upon powering on the sampler.

- Thermostat:
  - On: The thermostat turns on and the system starts to regulate the temperature inside the sample space towards the setpoint.
  - Off: The thermostat turns off.
- Enable Analysis

NOTE The Enable Analysis control setting is available since LC & CE drivers A.02.19.

  - With any temperature: The analysis starts regardless of the actual temperature inside the sampler.
  - Temperature within +/- 2 °C: The analysis starts only when the actual temperature is within the ± 2 °C range of the setpoint temperature.

NOTE The Temperature within +/- 2 °C option is only available for the Sample Thermostat.

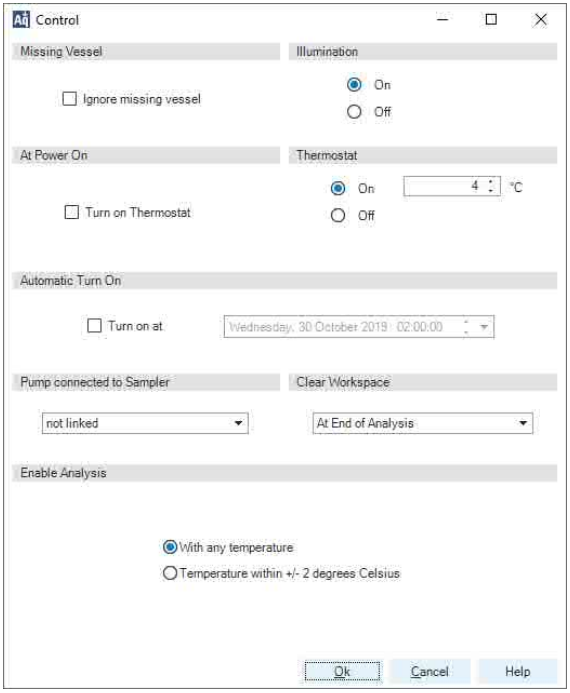

Figure 29: Control dialog box

Temperature Mode

Selecting **Modify** > **Temperature Mode** in the **Control Interface** will prompt a dialog box, where the temperature control mode can be switched between being a method parameter or a system (control) setting:

- **Constant Temperature Mode**: The temperature control mode is defined as a system (control) setting, meaning that the temperature setting is independent of the method parameters. The temperature stays constant for all methods within a given sequence. This control mode is the default option and recommended for most applications.
- **Variable Temperature Mode**: The temperature control mode is defined as a method parameter, meaning that the temperature setting is part of the method parameters. The temperature can change from method to method within a given sequence. This control mode is not recommended for most analytical workflows but might be used for some special applications, such as degradation studies.

NOTE

For modifying the temperature mode, LC & CE drivers A.02.12 or higher are required. If the system is run on an earlier driver version, the temperature mode is defined as a system setting.

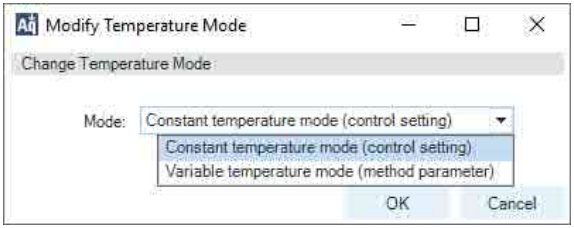

Figure 30: Modify Temperature Mode dialog box

Before using the **Variable Temperature Mode** setting, here are some hints and tips to consider:

- Changing the temperature setting from one method to another will affect all samples inside the sampler.
- Depending on the extent of the temperature change, it could take up to a couple of hours until the sample temperature stabilizes at the new setpoint (for example, from 4 to 40 °C or vice versa).

- It might be beneficial to use the **Temperature within +/- 2 °C** function; otherwise, the next run will start without waiting for the new setpoint being reached.

Online Signals

In the **Online Signals** tab of the CDS, the actual temperature of the sample space can be configured and plotted together with the other instrument actuals. This enables the user to have a better overview of how the temperature changes over time.

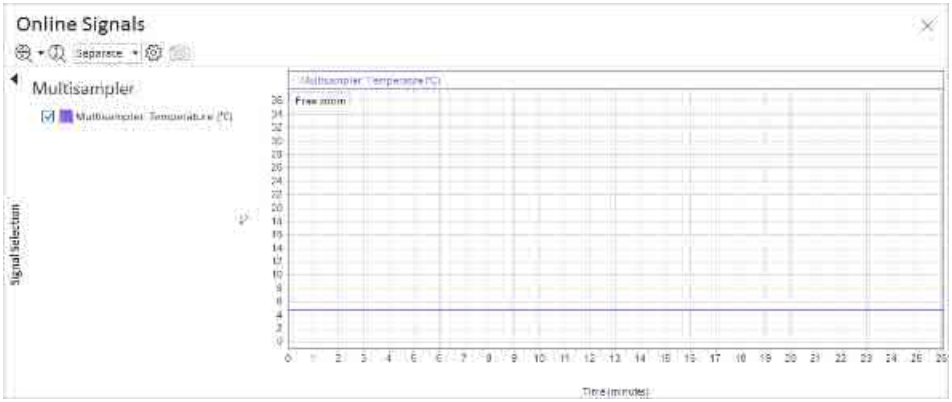

Reporting Sample Temperature

The actual and setpoint temperature can be included in the analysis report. For this, the **Samples** > **Advanced Run Information** field must be included in the report template.

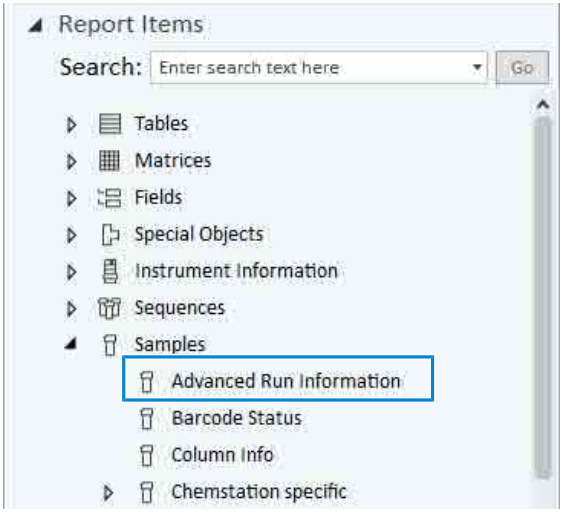

Figure 31: Finding the Advanced Run Information setting in OpenLab CDS 2.4.

Method Events

Module	Name	Value
Sampler	Run start - Temperature	5 °C
Sampler	Run start - Temperature setpoint	4 °C
Sampler	Run stop - Temperature	5 °C
Sampler	Run stop - Temperature setpoint	4 °C

Figure 32: Reporting actual and setpoint temperature using the **Advanced Run Information** setting.

NOTE For OpenLab CDS ChemStation, this option is only available in Intelligent Reporting.

Operation Information

Reaching Setpoint Temperature

Depending on the ambient conditions and the sampler configuration (for example, hotel configuration for the Multisampler), reaching the setpoint temperature can take from 30 min up to a couple of hours.

NOTE Reaching the 4 °C setpoint from an ambient temperature of 22 °C takes about 45 min for the Vialsampler (G7129A/B/C or G7157A), as well as for the Hybrid Multisampler (G7167C), Multisampler (G7167A/B, G5668A, G7137A, or G4767A), and the Online Sample Manager (G3167A) with a single 2H drawer installed.

NOTE This relatively slow ramping down of the temperature is necessary to avoid ice formation.

NOTE For the best performance of the Sample Thermostat, all drawers must be installed in the sampler. For the Multisampler, use dummy drawers if no full hotel configuration is needed.

Condensate Formation

Operating the thermostat at temperatures below ambient results in condensate formation. This condensed water is collected in the base plate of the thermostat and drained through the drainpipe at the back of the unit. The container for condensate collection should be regularly emptied to ensure the proper functioning of the system.

NOTE If the container is overfilled or the condensate tubing is blocked, the condensate sensor is triggered, rendering the HPLC system to enter the error state (see Sample Temperature Control Switched Off Due to Condensate on page 233).

NOTE Depending on the ambient conditions in the lab, the amount of condensate can vary from 200 mL to 2 L per day. Waste containers for the condensate should not be filled to the top. The waste container must be emptied regularly.

Dew Formation

Setting the thermostat from a lower to a higher temperature setpoint, or just simply turning it off, can result in dew formation on the internal surfaces of the sampler. This is normal and should cease after a couple of hours at the most.

Frequent Door/Drawer Opening

Opening the door(s) and/or the sample drawers frequently can compromise the temperature stability, as fresh warm and humid air will enter each time. In a highly humid environment, this could also lead to the formation of significant amounts of condensate on the internal surfaces of the sampler.

Ice Formation

The Sample Thermostat was designed to operate without the risk of icing. In an unlikely event of ice formation, turn off the thermostat and wait until it defrosts.

NOTE Do not use mechanical devices or other means to accelerate the defrosting process.

Shutting Down

When the Sample Thermostat needs to be turned off for the night or a longer period, the following best practices are recommended:

- Remove all sample containers and/or vials from the sampler.
- Let the system reach the ambient temperature. Opening the door(s) of the sampler facilitates this process.
- Remove any condensate that might appear on the sample drawers or the internal surfaces of the sampler.
- Make sure that all condensate is removed from the thermostat.

NOTE Gently tapping on the sides of the sampler facilitates the condensate removal. Tilting the module towards its right back corner is not recommended as it can damage the internal parts.

Transporting the Sampler

Prepare a Sampler Without Thermostat for Transportation

When

- The module needs to be transported or relocated.

WARNING

Heavy weight

The module is heavy.

- **Carry the module at least with 2 people.**
- **Avoid back strain or injury by following all precautions for lifting heavy objects.**
- **Ensure that the load is as close to your body as possible.**
- **Ensure that you can cope with the weight of your load.**

CAUTION

Unsecured transportation

Mechanical damage

- Secure the transport assembly before transporting the sampler.

1. Remove all vials from the vial drawers.
2. Move the transport assembly to the park position using Instant Pilot or Lab Advisor, see Park Arm on page 198.
3. Turn off the sampler.
4. Install the Transport Protection Foam, see Install the Transport Protection Foam on page 174.

Prepare a Sampler With Thermostat for Transportation

When

- The module needs to be transported or relocated.

WARNING

Heavy weight

The module is heavy.

- **Carry the module at least with 2 people.**
- **Avoid back strain or injury by following all precautions for lifting heavy objects.**
- **Ensure that the load is as close to your body as possible.**
- **Ensure that you can cope with the weight of your load.**

CAUTION

Condensate inside

Damage to the electronics

- Unplug the power cords.
- Drain off all condensate before dismounting the sample thermostat.
- Make sure that there is no condensate left.

CAUTION

Unsecured transportation

Mechanical damage

- Secure the transport assembly before transporting the sampler.

NOTE

Moving the sampler with the Sample Thermostat installed is possible for short distances (for example, from one workbench to another). For longer transportation, remove the thermostat from the sampler and handle the units separately.

1 Turn off the Sample Thermostat.

2 Remove condensate.

   a Place a suitable container underneath the outlet pipe.

   b Remove the drainage tube.

   c Gently tap the sides of the sampler several times to facilitate the drainage of the condensate from the system.

NOTE Do not tilt the module to avoid damage to the internal parts.

3 Remove all vials from the vial drawers.

4 Move the transport assembly to the park position using Instant Pilot or Lab Advisor, see Park Arm on page 198.

5 Turn off the sampler.

6 Install the Transport Protection Foam, see Install the Transport Protection Foam on page 174.

7 Remove the Sample Thermostat from the sampler if needed, see Replace the Sample Thermostat on page 327.

Install the Transport Protection Foam

When

- To secure the transport arm before transporting or shipping the sampler.

Parts required

Qty.	p/n	Description
1	G7129-40050	Transport Protection Foam

Preparations

- All vials are removed from the vial drawers.

1 Open the doors of the module.

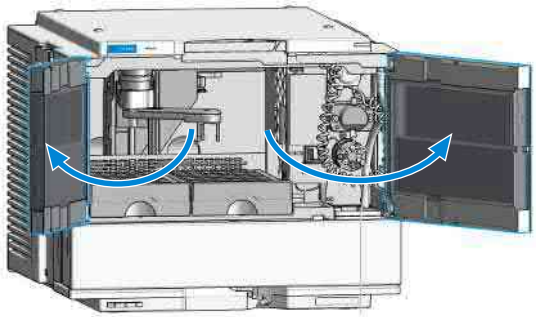

2 Move the gripper arm into the park position (see Park Arm on page 198) and turn off the sampler.

3 Place the Transport Protection Foam into the sampler.

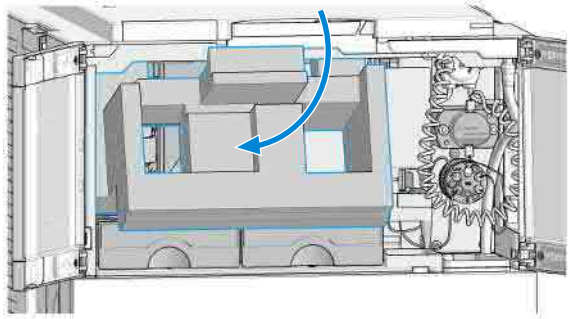

4 Push the Transport Foam in until the endpoint.

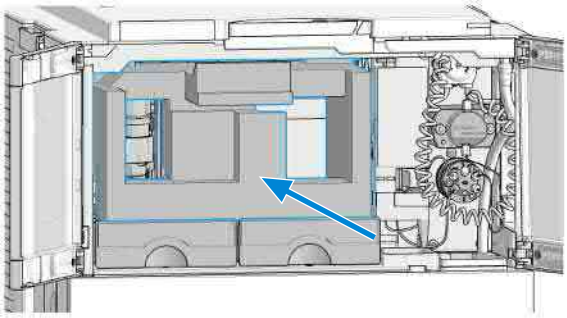

5 Ensure that the foam is snapped behind the upper part of the metal frame.

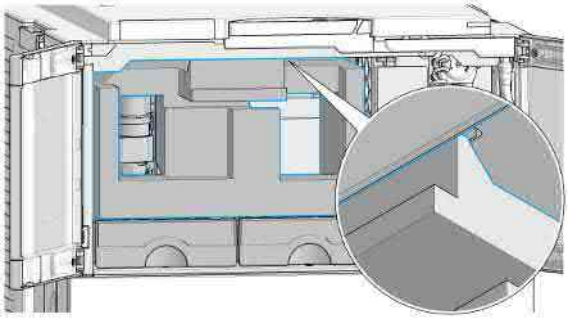

6 Close the doors.

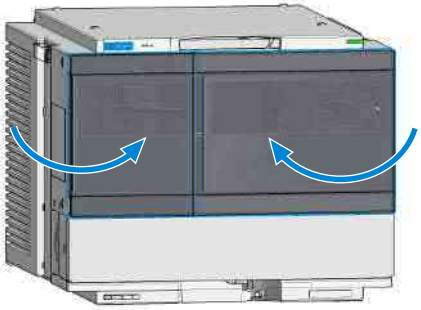

5 Optimizing the Performance of the Module

This chapter provides information on how to optimize the module.

Optimization for Lowest Carryover 178
Using the Automated Needle Wash (Wash Port) 178
Using an Injector Program 180
General Recommendation for Lowest Carryover 181

Fast Injection Cycle and Low Delay Volume 182
Overlapped Injection Mode 182
General Recommendations for Fast Injection Cycle Times 183

Precise Injection Volume 184
Draw and Eject Speed 184

Choice of Rotor Seal 186

Optimization for Lowest Carryover

Several parts of an injection system can contribute to carryover:

- needle outside
- needle inside
- needle seat
- sample loop
- seat capillary
- injection valve

The autosampler continuous flow-through design ensures that sample loop, needle inside, seat capillary, and the mainpass (main path) of the injection valve is always in the flowline. These parts are continuously flushed during an isocratic and also during a gradient analysis. The residual amount of sample remaining on the outside of the needle after injection may contribute to carryover in some instances. When using small injection volumes or when injecting samples of low concentration immediately after samples of high concentration, carryover may become noticeable. Using the automated needle wash enables the carryover to be minimized and also prevents contamination of the needle seat.

Using the Automated Needle Wash (Wash Port)

The automated needle wash feature can be enabled in the method parameter tab (enable needle wash) or as part of an injector program. When started, the needle moves into the wash port, and a stream of fresh wash solvent rinses its outer surface. The washing always takes place immediately after the sample draw procedure. This measure ensures that all sample traces are rinsed off from the surface of the needle before it moves into the seat. Contaminations can cause carryover problems later. To ensure that the needle seat does not get contaminated, use the automated needle wash.

The wash port is in the needle station and has a flapping mechanism. During the needle wash procedure, the gripper arm moves the wash port into a position that allows the needle to move into the well for washing. Fresh solvent from the peristaltic pump of the hydraulic box constantly replaces the waste solvent in the

wash well during the entire wash procedure. The exhausted solvent overflows the upper edge of the wash well and gets routed into the waste handling system. This operation of the automated wash feature allows the needle to be rinsed with a constant stream of fresh wash solvent, which is necessary for minimizing carryover.

Choose the wash solvent with great care. It should be strong enough to completely solubilize the analyte and sample matrix while being gentle enough not to damage components of the wash system. For more information on solvent compatibility, see Solvent Information on page 401.

The peristaltic pump delivers with a flow rate of 5 mL/min. Since the wash port has a volume of ca. 0.5 mL, replacing the entire volume with fresh solvent takes about 6 seconds. When selecting the duration of the washing, one must consider what level of carryover is acceptable and how long the overall injection cycle can be. For routine situations where carryover is less of a problem, the needle wash procedure can be as short as two to three seconds. When the analyte tends to adsorb to the surface of the needle or low levels of carryover are necessary, the wash cycle might need to be elongated to 10 to 20 seconds.

Using the Needle Wash in the Wash Vial

For very critical applications where the outside of the needle cannot be cleaned sufficiently with one wash port solvent you can use an injector program and an additional wash vial with an appropriate and stronger solvent for cleaning. The wash vial should contain solvent in which the sample components are soluble, and the vial should not be capped. If the wash vial is capped, small amounts of sample remain on the surface of the septum, which may be carried on the needle to the next sample.

Injector Program with Needle Wash

The injector program includes the command WASH. When this command is included in the injector program, the needle is lowered once into the specified wash vial or flushport before injection.

For example:

1. WASH > Location P2-A1 or flushport
2. Draw 5 µL from Sample Location P1-A1
3. INJECT

Line 1 moves the needle to vial P2-A1 or the flushport. Line 2 draws 5 µL from the current sample vial P1-A1. Line 3 injects the sample (valve switches to main pass).

Using an Injector Program

The process is based on a program that switches the bypass grove of the injection valve into the flow line for cleaning. This switching event is performed at the end of the equilibration time to ensure that the bypass grove is filled with the start concentration of the mobile phase. Otherwise the separation could be influenced, especially if microbore columns are used.

Example

Outside wash of needle in vial p2-A1 before injection

Injector program:

- Draw x.x (y) µl from sample
- WASH vial location p2-A1
- Inject

  Wait (equilibration time - see text above)

  Valve bypass

  Wait 0.2 min

  Valve mainpass (main path)

  Valve bypass

  Valve mainpass (main path)

NOTE Overlapped injection together with additional injection valve switching is not possible.

General Recommendation for Lowest Carryover

For samples where the outside of the needle cannot be cleaned sufficiently with the wash port use wash vials with an appropriate and stronger solvent. An injector program and an extra wash vial can be used for cleaning.

In case the needle seat has got contaminated and carryover is significantly higher than expected, the following procedure can be used to clean the needle seat:

- In Lab Advisor go to **Maintenance** > **Change Needle** : this sets the needle into home position.
- Remove the safety cover of the sampler. Be carefully not to risk an injury by the uncovered needle.
- Pipette an appropriate solvent on to the needle seat. The solvent should be able to dissolve the contamination. If the contamination is unknown, use two or three solvents of different polarity. Use several milliliters to clean the seat.
- Clean the needle seat with a tissue and remove all liquid. Again be careful not to risk an injury by the uncovered needle.
- Reinstall the safety cover of the sampler.
- In Lab Advisor, go to **Maintenance** > **Change Needle** and finish the procedure.

Fast Injection Cycle and Low Delay Volume

Short injection cycle times for high sample throughput is one of the most important requirements in laboratories. In order to shorten cycle times, you can:

- shorten the column length
- use high flow rates
- apply a steep gradient

Having optimized these parameters, further reduction of cycle times can be obtained using the overlapped injection mode.

Overlapped Injection Mode

In this process, when the sample has reached the column, the injection valve is switched back to bypass, and the next injection cycle starts but waits with switching to mainpass (main path) until the actual run is finished. You gain the sample preparation time when using this process.

Switching the valve into the bypass position reduces the system delay volume. The mobile phase is directed to the column without passing sample loop, needle, and needle seat capillary. This can help to have faster cycle times especially if low flow rates have to be used like it is mandatory in narrow bore and micro bore HPLC.

NOTE Having the valve in bypass position can increase the carryover in the system.

The injection cycle times also depend on the injection volume. In identically standard condition, injecting 100 µL instead of 1 µL, increase the injection time by approximately 8 s. In this case and if the viscosity of the sample allows it, the draw and eject speed of the injection system has to be increased.

NOTE For the last injection of the sequence with overlapped injections, it has to be considered that for this run the injection valve is not switched as for the previous runs and consequently the injector delay volume is not bypassed. This means that the retention times are prolonged for the last run. Especially at low flow rates this can lead to retention time changes which are too big for the actual calibration table. To overcome this, it is recommended to add an extra “blank” injection as last injection to the sequence.

General Recommendations for Fast Injection Cycle Times

As described in this section, the first step to provide short cycle times are optimizing the chromatographic conditions. If this is done the autosampler parameter should be set to:

- Overlapped injection mode
- Increase of draw and eject speed for large injection volumes
- Add at last run a blank, if overlapped injection is used

To reduce the injection time, the detector balance has to be set to OFF.

Precise Injection Volume

Injection Volumes Less Than 2 µL

When the injection valve switches to the BYPASS position, the mobile phase in the sample loop is depressurized. When the syringe begins drawing sample, the pressure of the mobile phase is decreased further. If the mobile phase is not degassed adequately, small gas bubbles can form in the sample loop during the injection sequence. When using injection volumes < 2 µL, these gas bubbles can affect the injection-volume precision. Use degassed mobile phases for best injection-volume precision with injection volumes < 2 µL.

If the pump has no degasser, it is recommended to use an Agilent 1260 Infinity degasser.

Also, using the automated needle wash (see Optimization for Lowest Carryover on page 178) between injections reduces carryover to a minimum, further improving the injection volume precision.

Draw and Eject Speed

Draw Speed

The speed at which the metering unit draws sample out of the vial may have an influence on the injection volume precision when using viscous samples. If the draw speed is too high, air bubbles may form in the sample plug, affecting precision. The default draw speed is 100 µL/min. This speed is suitable for the majority of applications, however, when using viscous samples, set the draw speed to lower speed for optimum results. A DRAW statement in an injector program also uses the draw speed setting which is configured for the autosampler.

Eject Speed

The default eject speed setting is 400 µL/min. When using large injection volumes, setting the eject speed to a higher value speeds up the injection cycle by shortening the time the metering unit requires to eject solvent at the beginning of the injection cycle (when the piston returns to the home position).

An EJECT statement in an injector program also uses the eject speed setting which is configured for the autosampler. A faster eject speed shortens the time required to run the injector program. When using viscous samples, a high eject speed should be avoided.

Choice of Rotor Seal

Vespel™ Seal (for 1290 Vialsampler Only)

The 1290 seal has sealing material made of Vespel. Vespel is suitable for applications using mobile phases within the pH range of 2.3 – 9.5 , which is suitable for most applications. However, for applications using mobile phases with pH below 2.3 or above 9.5 , the Vespel seal can degrade faster, leading to reduced seal lifetime.

PEEK Seal (for 1260 Vialsamplers Only)

The 1260 injection valve has a sealing material made of PEEK. This material has high chemical resistance and versatility. It is suitable for application using mobile phases within a pH between 1 and 14 .

NOTE Strong oxidizing acids such as concentrated nitric and sulfuric acids are not compatible with PEEK.

6 Diagnostics and Troubleshooting

This chapter gives an overview of the maintenance, troubleshooting, and diagnostic features available.

Diagnostic Features 188
Status Indicators 188
User Interfaces 188
Troubleshooting With HPLC Advisor 189

Maintenance and Troubleshooting Tools of the Module 190
Overview of Available Tests and Tools 190
Maintenance Positions 191
Gripper Verification 195
Injector Steps 196
Park Arm 198
Diagnostic Tests 199

Agilent Lab Advisor Software 201

Diagnostic Features

This section gives an overview of the diagnostic features available.

Status Indicators

The Agilent InfinityLab Series LC modules are equipped with two status indicator LED lights to enable the user to get an immediate visual impression of the actual state of the instrument:

- The power indicator light is integrated into the main switch of the module and provides information about whether the system is powered on. When the indicator illuminates in green, the module is on.
- The module status indicator light is in the upper right corner of the module and provides information on the actual operating state of the system, see Status Indicators on page 108 for more information.

User Interfaces

InfinityLab Assist

InfinityLab Assist provides you with assisted troubleshooting and maintenance at your instrument.

If the system in use supports the InfinityLab Assist, follow the instructions provided. Else, the preferred solution is to use Agilent Lab Advisor Software.

- Depending on the user interface, the available tests and the screens/reports may vary.
- The preferred tool for troubleshooting and diagnostics should be Agilent Lab Advisor Software, see Agilent Lab Advisor Software on page 201.
- Screenshots used within these procedures are based on the Agilent Lab Advisor Software.

Troubleshooting With HPLC Advisor

Baseline, Peak Shape, Pressure, Retention related issues, can be solved using the HPLC Advisor App. For more information, see Troubleshooting Reversed-Phase Chromatographic Techniques With HPLC Advisor.

If using an InfinityLab Assist, navigate to **Health** > **Troubleshooting** to help solve baseline, peak shape, pressure, and retention related issues.

Maintenance and Troubleshooting Tools of the Module

Overview of Available Tests and Tools

Table 21: Overview of tests and tools

Name	Type	Lab Advisor Software	InfinityLab Assist	1200 Infinity Instant Pilot	InfinityLab Companion
Maintenance Positions	Tool	yes	yes [7]	yes	yes
Park Arm	Tool	yes	yes	yes	yes
Injector Steps	Tool	yes	no	yes	yes
Gripper Verification	Tool	yes	no	no	no
Automatic Referencing	Tool	yes [8]	no	no	no
ALS Torque Verification	Tool	yes [8]	no	no	no
Sample Cooler Function Test	Test	yes	no	no	no
Heater Test	Test	yes	no	no	no
Transport Assembly Test	Test	yes [8]	no	no	no

7 Only for needle, needle seat, and gripper arm replacement

8 only available with an FSE license

Maintenance Positions

The replacement of certain components, such as the needle or the metering seal, requires the needle arm, the metering device plunger or the gripper arm to be moved into specific positions. With the Maintenance Positions function, these components can be moved into predefined service positions, enabling the easy and safe access to parts that would not be accessible otherwise.

WARNING

Sharp needle
Some of the maintenance positions require the removal of the safety cover, revealing the uncovered needle.

Risk of injury

- **Do not touch the tip of the needle.**
- **Keep your fingers off the moving needle.**
- **Wear safety goggles when handling an uncovered needle.**

Using the Change Needle, Loop and Seat Function

The **Change Needle, Loop, and Seat** function grants easy access to the needle, the sample loop, and the needle seat by moving the needle and the gripper arm into predefined positions.

The execution of this function encompasses the following elementary steps when the Agilent Lab Advisor Software is used:

1. Select **Maintenance Positions** from the list under **Service & Diagnostics**.
2. Under **Task Selection**, select **Change, Needle, Loop and Seat** and click **Start**.
3. Specify the type of the seat and loop capillary being installed in the **Verify capillary configuration** dialog box and click **Continue**.
4. Wait until the needle arm moves into the upper position.
5. Remove the safety cover and move the wash port safety flap to the service position by slightly lifting it up and then flapping it to the left.
6. Confirm that the wash port safety flap is in the service position and click **Next** to continue.

WARNING

Sharp needle

Risk of injury due to moving needle.

- **Do not touch the tip of the needle.**
- **Keep your fingers off the moving needle.**
- **Wear safety goggles when handling an uncovered needle.**

7. Wait until the needle moves down and stops ca. 2 mm above the needle seat.
8. Remove the sample loop, see Exchange the Sample Loop Assembly on page 282 and the needle, see Exchange the Needle Assembly on page 264 and click **Next** to continue.
9. Replace the needle seat, see Exchange the Needle Seat Assembly on page 273, and click **Next** to continue.
10. Install the new needle, see Exchange the Needle Assembly on page 264, and click **Next** to continue.

11 Reconnect the old sample loop or install a new one if needed, see Exchange the Sample Loop Assembly on page 282, and click **Next** to continue.

12 Ensure that the needle tip is concentric with the seat. Use the **Move Up** and **Move Down** buttons to move the needle closer to or further away from the seat.

13 Click **Next** and wait until the needle arm moves into the upper position.

14 Move the wash port safety flap back to its original position.

15 Confirm that the wash port safety flap is in the correct position and click **Next**.

16 Reinstall the safety cover back to the needle station and click **Next** to continue.

17 Wait until the needle moves back to the needle seat. In the following pop-up dialog box, specify whether the EMF counters of the needle and the needle seat should be reset, then click **OK**.

18 Select **Back** in the bottom right corner to exit the **Maintenance Positions** function.

Using the Change Metering Seal and Piston Function

The Change Metering Seal and Piston function releases the tension on the metering spring by moving the plunger of the analytical head into the maintenance position.

The execution of this function encompasses the following elementary steps when the Agilent Lab Advisor Software is used:

1. Select Maintenance Positions from the list under Service & Diagnostics.
2. Under Task Selection, select Change Metering Seal and Piston and click Start.

   The plunger is moved into the maintenance position, releasing the tension on the spring.
3. Remove the analytical head and the metering seal or replace any other component of the analytical head, see Exchange the Metering Seal and Piston on page 295.
4. Click Next to move the piston back to the home position.
5. In the following pop-up dialog box, specify whether the EMF counter of the metering seal should be reset, then click OK.
6. Select Back in the bottom right corner to exit the Maintenance Positions function.

Using the Change Gripper Function

The **Change Gripper** function grants easy access to the release mechanism of the gripper assembly by bringing the gripper arm into the front position.

The execution of this function encompasses the following elementary steps when the Agilent Lab Advisor Software is used:

1. Select **Maintenance Positions** from the list under **Service & Diagnostics**.
2. Under **Task Selection**, select **Change Gripper** and click **Start**.

   This gripper is moved into the maintenance position.
3. Replace the gripper arm, see Exchange the Gripper Arm on page 306.
4. Click **Next** to move the gripper arm back to the home position.
5. Select **Back** in the bottom right corner to exit the **Maintenance Positions** function.

Gripper Verification

The **Gripper Verification** is a diagnostic tool to verify that the gripper alignment is correct using several predefined vial positions as reference points.

Table 22: Available reference positions for the various vial drawer types.

Vial Drawer Type	Part Number	Available Reference Positions
Drawer for 66 x 2 mL vials	G7129-60010	A1, A11, D6, F1, F11
Drawer for 18 x 6 mL vials	G7129-60110	A1, A6, B4. C1, C6
Classic Vial Drawer Kit	G7129-68210	1, 10, 26, 41, 50, 51, 60, 76, 91, 100

NOTE

The **Gripper Verification** tool cannot be used to verify the positions of the external tray (G7129-60000).

The execution of the **Gripper Verification** tool encompasses the following elementary steps when the Agilent Lab Advisor Software is used:

1. Select **Gripper Verification** in the list under **Service & Diagnostics**.
2. Select any of the available reference positions in the drop-down list and ensure that there is a suitable vial in the selected position.
3. Click **Pick & Put Vial**.

   The gripper arm fetches the vial, lifts it up and places it back to its original position.
4. Repeat the preceding steps with a different vial position if needed.

NOTE

In the case of an error, use the **Reset** button to bring the sampler back to its normal operating state.

5. Select **Back** in the bottom right corner to exit the **Gripper Verification** function.

Injector Steps

Injector Steps is a diagnostic tool with which the user can walk through the whole injection process while having manual control over the elemental steps. This tool can be especially beneficial during troubleshooting when close observation of each individual step of the injection cycle can be crucial for success.

NOTE

For some commands, there are prerequisite steps that are executed automatically if not already done, see Table 23 on page 197.

The execution of the Injector Steps tool encompasses the following elementary steps when the Agilent Lab Advisor Software is used:

1. Select Injector Steps from the list under Service & Diagnostics.
2. Enter a valid value for the vial location and the injection volume in the Location and Volume fields, respectively.
3. Select and execute any of the step commands, see Table 23 on page 197.
4. Select Back in the bottom right corner to exit the Gripper Verification function.

   The vial is returned, the metering plunger moves into the home position, and the injection valve switches into the mainpass position.

Table 23: List of injector step commands

Command	Action	Prerequisite Steps [9]
Valve Bypass	The injection valve switches into the bypass position.	
Plunger Home	The metering piston moves into the home position.	Valve Bypass
Needle Up	The needle arm moves into the upper position.	Valve Bypass
Vial to Seat	The gripper arm moves the specified vial to the needle seat.	• Valve Bypass • Needle Up
Needle into Sample	The needle arm moves down and the needle penetrates into the vial. **NOTE:** Always the default needle offset value (0.0 mm) is applied.	• Valve Bypass • Needle Up • Vial to Seat

Command	Action	Prerequisite Steps [9]
Draw	The metering device draws the specified volume into the loop capillary. **NOTE:** This step can be performed multiple times, although the maximum volume of the analytical head will not be exceeded. Use **Plunger Home** to reset the metering device.	• Valve Bypass • Needle Up • Vial to Seat • Needle into Sample
Needle Up	The needle arm moves into the upper position, lifting the needle out of the vial.	Valve Bypass
Vial to Tray	The gripper arm returns the vial into its original position in the vial drawer.	Needle Up
Needle into Seat	The needle moves down into the needle seat.	**Needle Up** (only if a vial is present on the needle seat)
Valve Mainpass	The injection valve switches into the mainpass position.	Needle into Seat
Reset	The sampler gets reset and will reinitialize	

Park Arm

For transportation of the Vialsampler, the transport arm must be moved into the park position and secured with the transport foam (G7129-40050 (Transport Protection Foam)).

The **Park Arm** function can be found under **Special Commands** in the **Instrument Control** tab of the Agilent Lab Advisor software.

CAUTION

Unsecured transportation of the module

The Vialsampler must be transported in the park position with the transport foam installed. Failing to do so might lead to damage to the internal parts.

— Ensure that all vials are removed from the vial drawers.

— Ensure that the transport assembly is in the park position.

— Ensure that the G7129-40050 (Transport Protection Foam) is correctly installed.

9 Prerequisite steps are executed automatically if not already done.

Diagnostic Tests

Sample Cooler Function Test

The **Sample Cooler Function Test** is a diagnostic test to verify the correct functioning of the Sample Thermostat. The test takes up to 15 min to complete and returns a pass/fail type result. If the test failed or was aborted by the system, the final report will include some information on the possible root causes.

Before the test starts, the compressor is turned off to allow the system to reach the initial conditions. The test starts with acquiring data from the evaporator temperature sensor. If the reading is stable for at least 10 s ($\Delta T < 0.5$ °C), the compressor turns on and the temperature inside the thermostat starts to drop.

For the test to succeed, the system must pass three temperature checkpoints in a timely manner. These checkpoints are the following:

- Checkpoint 1: The temperature drops by 1/3 of the difference between the starting temperature and 5 °C.
- Checkpoint 2: The temperature drops below 5 °C.
- Checkpoint 3: The temperature stabilizes at a value below 5 °C and stays stable for at least 60 s ($\Delta T < 1.0$ °C).

For a Sample Thermostat, the heater resistance of the heating elements will also be tested and checked if the measured value is within the acceptance range (5 – 9 Ohm).

NOTE Lab Advisor B.02.11 or higher is needed for testing the heater resistance of the G7167-60101 Sample Thermostat.

NOTE Lab Advisor 2.19 or higher is needed to execute the Sample Cooler Function Test for the G7167-60201 Sample Thermostat.

Heater Test

The **Heater Test** is a diagnostic test to verify the correct functioning of the heating element of the Integrated Column Compartment (ICC). It measures the heating rate of the column oven and compares it against the threshold value. The test takes less than 1 min to complete and returns a pass/fail type result.

For the test to start, the actual temperature in the column oven must be equal to or below 60 °C. If the temperature is above 60 °C, the heater turns off and the system waits until the starting condition is reached.

NOTE

To circumvent any negative effect on the test result, the Sample Thermostat is turned off for the duration of the test if present.

Agilent Lab Advisor Software

The Agilent Lab Advisor Software (basic license, shipped with an Agilent LC pump) is a standalone product that can be used with or without a chromatographic data system. Agilent Lab Advisor helps to manage the lab for high-quality chromatographic results by providing a detailed system overview of all connected analytical instruments with instrument status, Early Maintenance Feedback counters (EMF), instrument configuration information, and diagnostic tests. With the push of a button, a detailed diagnostic report can be generated. Upon request, the user can send this report to Agilent for a significantly improved troubleshooting and repair process.

The Agilent Lab Advisor software is available in two versions:

- Lab Advisor Basic
- Lab Advisor Advanced

Lab Advisor Basic is included with every Agilent 1200 Infinity Series and Agilent InfinityLab LC Series instrument.

The Lab Advisor Advanced features can be unlocked by purchasing a license key, and include real-time monitoring of instrument actuals, all various instrument signals, and state machines. In addition, all diagnostic test results, calibration results, and acquired signal data can be uploaded to a shared network folder. The Review Client included in Lab Advisor Advanced makes it possible to load and examine the uploaded data no matter on which instrument it was generated. This makes Data Sharing an ideal tool for internal support groups and users who want to track the instrument history of their analytical systems.

The optional Agilent Maintenance Wizard Add-on provides an easy-to-use, step-by-step multimedia guide for performing preventive maintenance on Agilent 1200 Infinity LC Series instrument.

The tests and diagnostic features that are provided by the Agilent Lab Advisor software may differ from the descriptions in this manual. For details, refer to the Agilent Lab Advisor software help files.

7 Error Information

This chapter describes the meaning of error messages, and provides information on probable causes and suggested actions how to recover from error conditions.

What Are Error Messages 204

General Error Messages 205
Timeout 205
Shutdown 205
Remote Timeout 206
Lost CAN Partner 207
Leak 208
Leak Sensor Open 209
Leak Sensor Short 210
Compensation Sensor Open 211
Compensation Sensor Short 212
Fan Failed 213
ERI Messages 214

Vialsampler Error Messages 216
Command Failed Errors 216
Metering Home Failed 216
Automatic Referencing Procedure Failed 217
Needle Up/Down Failed Errors 218
Missing Vial Errors 219
Motor Overtemp 220
Motor Alignment Failed 221
Invalid Vial Position Errors 222
Cleanup After Abort Failed 223
Wash Procedure Failed 224
Start of Maintenance Procedure Failed Errors 225
Injection Valve Position Not Found 226
Cannot Move Metering, the Metering Type Definition Is Incorrect 227

Initialization Failed Errors 228
Unexpected Block During Axis Movement 229
Timeout During Axis Movement 230
Transport Arm Position Lost During X-Axis Movement 231

Sample Thermostat Error Messages 233
Sample Temperature Control Voltage Too Low, Check Fuses and Wires 233
Sample Temperature Control Switched Off Due to Condensate 233
Sample Temperature Control Switched Off Due to Overpressure 234
Sample Temperature Control Sensor Electronics Calibration Failed 235
Sample Temperature Control Switched Off Due to Supply Voltage Drop 236
Cooler Condensate Sensor Defect 237
Cooler PCB Is in Error Mode 238
Cooler Condenser Fan Failed 239
Thermostat Communication Error 240
Heater Defect 241
Heater in Operating Error 242
Heater Has Power Supply Failure 243
Thermostat Sensor Defect 244
Compressor Has Error 245
Sample Thermostat Type Unknown, Update Firmware 246
Thermostat Fan Defect 247

Integrated Column Compartment (ICC) Heater Error Messages 249
Wait for Temperature Function Timed Out 249
Heater Over-Current Protection Active 249
A Heater Sensor Reading Failed 250
Trend Analysis for the Heater Temperature Sensors Failed 251
Maximum Heater Temperature Exceeded 252
Column Heater Not Connected 253

What Are Error Messages

Error messages are displayed in the user interface when an electronic, mechanical, or hydraulic (flow path) failure occurs that requires attention before the analysis can be continued (for example, repair, or exchange of consumables is necessary). In the event of such a failure, the red status indicator at the front of the module is switched on, and an entry is written into the module logbook.

If an error occurs outside a method run, other modules will not be informed about this error. If it occurs within a method run, all connected modules will get a notification, all LEDs get red and the run will be stopped. Depending on the module type, this stop is implemented differently. For example, for a pump, the flow will be stopped for safety reasons. For a detector, the lamp will stay on in order to avoid equilibration time. Depending on the error type, the next run can only be started if the error has been resolved, for example liquid from a leak has been dried. Errors for presumably single time events can be recovered by switching on the system in the user interface.

Special handling is done in case of a leak. As a leak is a potential safety issue and may have occurred at a different module from where it has been observed, a leak always causes a shutdown of all modules, even outside a method run.

In all cases, error propagation is done via the CAN bus or via an APG/ERI remote cable (see documentation for the APG/ERI interface).

If using the InfinityLab Assist, instrument errors will generate a notification. To view the probable causes and recommended actions for this error, click on **Help** button displayed on the notification.

General Error Messages

General error messages are generic to all Agilent series HPLC modules and may show up on other modules as well.

Timeout

Error ID: 62

The timeout threshold was exceeded.

Probable cause		Suggested actions
1	The analysis was completed successfully, and the timeout function switched off the module as requested.	• Check the logbook for the occurrence and source of a not-ready condition. Restart the analysis where required.
2	A not-ready condition was present during a sequence or multiple-injection run for a period longer than the timeout threshold.	• Check the logbook for the occurrence and source of a not-ready condition. Restart the analysis where required.

Shutdown

Error ID: 63

An external instrument has generated a shutdown signal on the remote line.

The module continually monitors the remote input connectors for status signals. A LOW signal input on pin 4 of the remote connector generates the error message.

Probable cause		Suggested actions
1	Leak detected in another module with a CAN connection to the system.	• Fix the leak in the external instrument before restarting the module.
2	Leak detected in an external instrument with a remote connection to the system.	• Fix the leak in the external instrument before restarting the module.
3	Shut-down in an external instrument with a remote connection to the system.	• Check external instruments for a shut-down condition.
4	The degasser failed to generate sufficient vacuum for solvent degassing.	• Check the vacuum degasser for an error condition. Refer to the Service Manual for the degasser or the pump that has the degasser built-in. • Check the external vacuum degasser module (if installed) for an error condition. Refer to the *Service Manual* for the degasser or the pump that has the degasser built-in.

Remote Timeout

Error ID: 70

A not-ready condition is still present on the remote input. When an analysis is started, the system expects all not-ready conditions (for example, a not-ready condition during detector balance) to switch to run conditions within one minute of starting the analysis. If a not-ready condition is still present on the remote line after one minute the error message is generated.

Probable cause		Suggested actions
1	Not-ready condition in one of the instruments connected to the remote line.	• Ensure the instrument showing the not-ready condition is installed correctly, and is set up correctly for analysis.
2	Defective remote cable.	• Exchange the remote cable.
3	Defective components in the instrument showing the not-ready condition.	• Check the instrument for defects (refer to the instrument's documentation).

Lost CAN Partner

Error ID: 71

During an analysis, the internal synchronization or communication between one or more of the modules in the system has failed.

The system processors continually monitor the system configuration. If one or more of the modules is no longer recognized as being connected to the system, the error message is generated.

Probable cause		Suggested actions
1	CAN cable disconnected.	• Ensure all the CAN cables are connected correctly. • Ensure all CAN cables are installed correctly.
2	Defective CAN cable.	• Exchange the CAN cable.
3	Defective mainboard in another module.	• Switch off the system. Restart the system, and determine which module or modules are not recognized by the system.

Leak

Error ID: 64

A leak was detected in the module.

The signals from the two temperature sensors (leak sensor and board-mounted temperature-compensation sensor) are used by the leak algorithm to determine whether a leak is present. When a leak occurs, the leak sensor is cooled by the solvent. This changes the resistance of the leak sensor which is sensed by the leak sensor circuit on the mainboard.

NOTE

The leak sensor in the sampler is hidden under the ICC Column Heater or Column Shelf respectively.

Probable cause		Suggested actions
1	Loose fittings.	• Ensure all fittings are tight.
2	Broken capillary.	• Exchange defective capillaries.
3	Leaking rotor seal or needle seat.	• Exchange the rotor seal or seat capillary.
4	Defective metering seal.	• Exchange the metering seal. • *Make sure the leak sensor is thoroughly dry before restarting the autosampler.*
5	Leaking peristaltic pump.	• Exchange the peristaltic pump.

Leak Sensor Open

Error ID: 83

The leak sensor in the module has failed (open circuit).

The current through the leak sensor is dependent on temperature. A leak is detected when solvent cools the leak sensor, causing the leak sensor current to change within defined limits. If the current falls outside the lower limit, the error message is generated.

Probable cause		Suggested actions
1	Leak sensor not connected to the on/off switch board.	• Please contact your Agilent service representative.
2	Defective leak sensor.	• Please contact your Agilent service representative.
3	Leak sensor incorrectly routed, being pinched by a metal component.	• Please contact your Agilent service representative.
4	On/Off switch assembly defective.	• Please contact your Agilent service representative.

Leak Sensor Short

Error ID: 82

The leak sensor in the module has failed (short circuit).

The current through the leak sensor is dependent on temperature. A leak is detected when solvent cools the leak sensor, causing the leak sensor current to change within defined limits. If the current increases above the upper limit, the error message is generated.

Probable cause		Suggested actions
1	Defective leak sensor.	• Please contact your Agilent service representative.
2	Leak sensor incorrectly routed, being pinched by a metal component.	• Please contact your Agilent service representative.
3	On/Off switch assembly defective.	• Please contact your Agilent service representative.
4	Cable or contact problem.	• Please contact your Agilent service representative.

Compensation Sensor Open

Error ID: 81

The ambient-compensation sensor (NTC) on the power switch board in the module has failed (open circuit).

The resistance across the temperature compensation sensor (NTC) on the power switch board is dependent on ambient temperature. The change in resistance is used by the leak circuit to compensate for ambient temperature changes. If the resistance across the sensor increases above the upper limit, the error message is generated.

Probable cause		Suggested actions
1	Loose connection between the on/off switch board and the mainboard.	• Please contact your Agilent service representative.
2	Defective on/off switch assembly.	• Please contact your Agilent service representative.

Compensation Sensor Short

Error ID: 80

The ambient-compensation sensor (NTC) on the power switch board in the module has failed (open circuit).

The resistance across the temperature compensation sensor (NTC) on the power switch board is dependent on ambient temperature. The change in resistance is used by the leak circuit to compensate for ambient temperature changes. If the resistance across the sensor increases above the upper limit, the error message is generated.

Probable cause		Suggested actions
1	Defective on/off switch assembly.	• Please contact your Agilent service representative.
2	Loose connection between the on/off switch board and the mainboard.	• Please contact your Agilent service representative.

Fan Failed

Error ID: 68

The fan in the autosampler module or in the Sample Cooler/Sample Thermostat has failed.

- Error ID: 68,0 → Sampler fan defect
- Error ID: 68,1 → Condenser fan defect
- Error ID: 68,2 → Evaporator fan defect

The hall sensor on the fan shaft is used by the mainboard to monitor the fan speed. If the fan speed falls below a certain limit for a certain length of time, the error message is generated.

This limit is given by 2 revolutions/second for longer than 5 seconds.

Depending on the module, assemblies (e.g. the lamp in the detector) are turned off to assure that the module does not overheat inside.

Probable cause		Suggested actions
1	Fan cable disconnected.	• Please contact your Agilent service representative.
2	Defective sampler fan.	• Please contact your Agilent service representative.
3	Defective evaporator fan.	• Please contact your Agilent service representative.
4	Defective condenser fan.	• Please contact your Agilent service representative.
5	Blown fuses.	• Please contact your Agilent service representative.
6	Defective mainboard.	• Please contact your Agilent service representative.

ERI Messages

Error ID: 11120, 11121

The ERI (Enhanced Remote Interface) provides two error events related to over current situations on the +5 V and +24 V lines.

Probable cause		Suggested actions
1	The load on the ERI is too high.	• Reduce the load.

Vialsampler Error Messages

Command Failed Errors

Error ID: 34202, 34205, 34208, 34211, 34214, 34217, 34220

These are non-specific error messages, indicating that something went wrong during the execution of the given action command. They are usually coupled with other error events, which provide more specific information on the nature of the issue. To identify these source error events, look for entries with the same timestamp as for the "Command failed" error message.

- Error ID: 34202 → Metering command failed
- Error ID: 34205 → Draw command failed
- Error ID: 34208 → Eject command failed
- Error ID: 34211 → Mix command failed
- Error ID: 34214 → Needle command failed
- Error ID: 34217 → Transport command failed
- Error ID: 34220 → Valve command failed

Probable cause		Suggested actions
1	Command failed.	• Identify the source error message and follow the instructions provided.

Metering Home Failed

Error ID: 34224

The home position of the metering plunger is not found or the plunger is unable to move.

Probable cause		Suggested actions
1	Blockage in the flow path.	• Check if there is a significant pressure difference (> 10 – 15 bar) between the mainpass and the bypass position of the injection valve. If yes, systematically replace the components of the mainpass: Needle seat, Needle, Rotor seal, Sample loop
2	Potential hardware error.	• Please contact your Agilent service representative.

Automatic Referencing Procedure Failed

Error ID: 34225

The execution of the Automatic Referencing procedure was aborted by the system due to an unexpected error.

Probable cause		Suggested actions
1	Potential hardware error.	• Please contact your Agilent service representative.

Needle Up/Down Failed Errors

Error ID: 34303, 34304

- Error ID: 34303 → Needle up failed
- Error ID: 34304 → Needle down failed

The upper or the bottom position of the needle arm is not found or the needle arm is unable to move.

Probable cause		Suggested actions
1	Physical blockage.	• Look for potential sources of physical blockage in the path of the needle arm and eliminate them. • Verify the correct functioning of the needle arm by using the Injector Steps Lab Advisor tool. • Restart the sampler and observe if the problem persists.
2	Potential hardware error.	• Please contact your Agilent service representative.

Missing Vial Errors

Error ID: 34305, 34306

- Error ID: 34305 → Missing vial
- Error ID: 34306 → No wash vial

The gripper failed to detect any vial in the specified position of the vial tray.

Probable cause		Suggested actions
1	Missing vial.	• Verify the presence of a suitable vial in the position specified in the method or sequence. • If an injector program or purification method is used, verify that there is no controversial information specified there. • Rerun the method/sequence and observe if the problem persists.
2	Unsuitable vial type.	• Verify that the vials and caps used by the method comply with the requirements from Agilent.
3	Broken gripper.	• Verify the correct functioning of the gripper using the **Gripper Verification** tool. Replace the gripper if needed.
4	Misaligned gripper arm.	• Verify the correct functioning of the gripper arm using the **Gripper Verification** and **Injector Steps** tools. If the gripper arm appears to be out of alignment, contact Agilent for more information. • Verify that the alignment parameters are in the correct range and perform the **Automatic Referencing** if needed.
5	Potential hardware error.	• Please contact your Agilent service representative.

Motor Overtemp

Error ID: 34307

The ongoing transport movement is aborted because the transport assembly stepper motors are overheated.

- Error ID: 34307,0 → Motor over temperature at x-axis
- Error ID: 34307,1 → Motor over temperature at z-axis
- Error ID: 34307,2 → Motor over temperature at theta-axis
- Error ID: 34307,3 → Motor over temperature at gripper

Probable cause		Suggested actions
1	Physical blockage.	• Look for potential sources of physical blockage in the path of the gripper arm and eliminate them. • Verify that no obstacle hinders the X-axis movement, for example, a vial that is stuck below the transport rods in the transport assembly body. • Restart the sampler and observe if the problem persists.
2	Broken gripper.	• Verify the correct functioning of the gripper using the **Gripper Verification** tool. Replace the gripper if needed.
3	Contaminated transport rods.	• Inspect the X- and Z-axis transport rods and clean them if you observe contamination or dust accumulation on them. Use isopropanol and lint-free cloth for this purpose.
4	Misaligned gripper arm.	• Verify the correct functioning of the gripper arm using the **Gripper Verification** and **Injector Steps** tools. If the gripper arm appears to be out of alignment, contact Agilent for more information. • Verify that the alignment parameters are in the correct range and perform the **Automatic Referencing** if needed.
5	Potential hardware error.	• Please contact your Agilent service representative.

Motor Alignment Failed

Error ID: 34221

The alignment of the transport assembly stepper motors failed during the initialization process.

- Error ID: 34221,0 → Motor alignment failed at x-axis
- Error ID: 34221,1 → Motor alignment failed at z-axis
- Error ID: 34221,2 → Motor alignment failed at theta-axis
- Error ID: 34221,3 → Motor alignment failed at gripper

Probable cause		Suggested actions
1	Potential hardware error.	• Please contact your Agilent service representative.

Invalid Vial Position Errors

Error ID: 34309, 34313

The vial position defined in the method/sequence is invalid.

The error is also triggered when the source vial tray is not inserted during fetching a vial or returning it to the tray after sample injection. Do not remove the vial drawers the sampler is injecting or in the prerun or postrun state.

The vial drawers are automatically recognized by the reflection sensors on the transport assembly when they are installed in the Vialsampler. The vial drawers are distinguished based on the tag information on their rear side (white markers). If the information from the optical sensors is not in agreement with the vial position defined in the method/sequence, the ongoing analysis will be aborted and the respective error ID reported.

- Error ID: 34309 → Invalid vial position
- Error ID: 34313 → Invalid wash vial position

Probable cause		Suggested actions
1	Missing vial tray.	• Verify that the correct vial drawer type is installed and both drawers are pushed in. Restart the sampler and observe if the problem persists.
2	Missing tag information.	• Verify that the white markers are still intact and not covered by dirt or dust. If necessary, clean the markers with isopropanol or replace the vial tray.
3	Misaligned gripper arm.	• Verify the correct functioning of the gripper arm using the **Gripper Verification** and **Injector Steps** tools. If the gripper arm appears to be out of alignment, contact Agilent for more information. • Verify that the alignment parameters are in the correct range and perform the **Automatic Referencing** if needed.
4	Potential hardware error.	• Please contact your Agilent service representative.

Cleanup After Abort Failed

Error ID: 34310

This, similarly to the **Command failed error** events, is a non-specific error message and indicates only that something went wrong during the cleanup procedure. The cleanup procedure refers to the process, which is executed when an analysis is aborted (for example, due to a missing vial) and the components of the sampler (such as the needle, gripper arm, and the metering device) need to be reset to the initial conditions. As for the **Command failed error** events, this error message is usually also coupled with other error events, which provide more specific information on the nature of the issue. To identify these source error events, look for entries with the same timestamp as for the **Cleanup after abort failed** error message.

Probable cause		Suggested actions
1	Cleanup procedure failed.	• Identify the source error message and follow the instructions provided.

Wash Procedure Failed

Error ID: 34314

This, similarly to the **Command failed error** events, is a non-specific error message and indicates only that something went wrong during the wash procedure. It is usually coupled with other error events, which provide more specific information on the nature of the issue. To identify these source error events, look for entries with the same timestamp as for the **Wash procedure failed** error message.

Probable cause		Suggested actions
1	Wash procedure failed.	• Identify the source error message and follow the instructions provided.

Start of Maintenance Procedure Failed Errors

Error ID: 34315, 34316, 34317

These, similarly to the **Command failed error** events, are non-specific error messages and indicate only that something went wrong with initiating the given maintenance procedure. These error messages are usually coupled with other error events, which provide more specific information on the nature of the issue. To identify these source error events, look for entries with the same timestamp as for the **Start of maintenance procedure failed** error message.

- Error ID: 34315 → Start of needle/seat change procedure failed
- Error ID: 34316 → Start of piston change procedure failed
- Error ID: 34317 → Start of gripper change procedure failed

Probable cause		Suggested actions
1	Maintenance procedure failed.	• Identify the source error message and follow the instructions provided.

Injection Valve Position Not Found

Error ID: 34319

The injection valve position is not found or the valve is unable to switch.

Probable cause		Suggested actions
1	Overtightened screws.	• Verify that the stator screws are not overtightened as it can lead to hindered rotor movements. If necessary, loosen the stator screws and retighten them appropriately.
2	Broken rotor seal.	• Check the rotor seal for signs of visible damage and if necessary, replace it.
3	Broken stator.	• Check the stator for signs of visible damage and if necessary, replace it.
4	Potential hardware error.	• Please contact your Agilent service representative.

Cannot Move Metering, the Metering Type Definition Is Incorrect

Error ID: 34320

The analytical head is not operational because there is no valid information available for its type in the firmware.

Probable cause		Suggested actions
1	Missing configuration data.	• Verify that the type of the analytical head is correctly configured in the CDS or Lab Advisor.
2	Potential hardware error.	• Please contact your Agilent service representative.

Initialization Failed Errors

Error ID: 34322, 34323, 34324, 34325, 34326

These are non-specific error messages, indicating that something went wrong during the initialization of the given component. They are usually coupled with other error events, which provide more specific information on the nature of the issue. To identify these source error events, look for entries with the same timestamp as for the **Initialization failed** error message.

- Error ID: 34322 → Metering device initialization failed
- Error ID: 34323 → Injection valve initialization failed
- Error ID: 34324 → Needle device initialization failed
- Error ID: 34325 → Transport initialization failed
- Error ID: 34326 → Sampler initialization failed

Probable cause		Suggested actions
1	Initialization failed.	• Identify the source error message and follow the instructions provided.

Unexpected Block During Axis Movement

Error ID: 34329

The ongoing transport movement is aborted due to a potential blockage in the pathway of the gripper arm.

- Error ID: 34329,0 → Unexpected block during x-axis movement
- Error ID: 34329,1 → Unexpected block during z-axis movement
- Error ID: 34329,2 → Unexpected block during theta-axis movement
- Error ID: 34329,3 → Unexpected block during gripper movement

Probable cause		Suggested actions
1	Broken gripper.	• Verify the correct functioning of the gripper using the **Gripper Verification** tool. Replace the gripper if needed.
2	Contaminated transport rods.	• Inspect the X- and Z-axis transport rods and clean them if you observe contamination or dust accumulation on them. Use isopropanol and lint-free cloth for this purpose.
3	Misaligned gripper arm.	• Verify the correct functioning of the gripper arm using the **Gripper Verification** and **Injector Steps** tools. If the gripper arm appears to be out of alignment, contact Agilent for more information. • Verify that the alignment parameters are in the correct range and perform the **Automatic Referencing** if needed.
4	Potential hardware error.	• Please contact your Agilent service representative.

Timeout During Axis Movement

Error ID: 34330

The system reported an error because the execution of the given transport command took longer than expected.

This error is triggered when the time buffer for a given transport movement overflows. There is a time limit for the execution of each elemental transport step defined in the firmware. If this limit is exceeded, the ongoing command will be aborted and error ID 34330 reported.

- Error ID: 34330,0 → Timeout during x-axis movement
- Error ID: 34330,1 → Timeout during z-axis movement
- Error ID: 34330,2 → Timeout during theta-axis movement
- Error ID: 34330,3 → Timeout during gripper movement

Probable cause		Suggested actions
1	Contaminated transport rods.	• Inspect the X- and Z-axis transport rods and clean them if you observe contamination or dust accumulation on them. Use isopropanol and lint-free cloth for this purpose.
2	Broken gripper.	• Verify the correct functioning of the gripper using the **Gripper Verification** tool. Replace the gripper if needed.
3	Potential hardware error.	• Please contact your Agilent service representative.
4	Misaligned gripper arm.	• Verify that the alignment parameters are in the correct range and perform the **Automatic Referencing** if needed.

Transport Arm Position Lost During X-Axis Movement

Error ID: 34331

The position of the transport arm got compromised due to losing steps during X-axis movements, which triggered the error state to prevent damage to hardware components.

Probable cause		Suggested actions
1	Potential hardware error.	• Please contact your Agilent service representative.

Sample Thermostat Error Messages

Sample Temperature Control Voltage Too Low, Check Fuses and Wires

Error ID: 30713

The compressor voltage is below the lower threshold value.

Probable cause		Suggested actions
1	Potential hardware error.	• Please contact your Agilent service representative.

Sample Temperature Control Switched Off Due to Condensate

Error ID: 30715

The cooler/thermostat was switched off due to a condensate event.

Probable cause		Suggested actions
1	Overfilled container.	• Empty the condensate container. Verify that the open end of the tubing doesn't immerse in the liquid.
2	Drainage issues.	• Verify the correct plumbing of the condensate drainage system. • Make sure that no kinks or mechanical blocks are present in the drainage system. • Avoid the formation of the siphoning effect. • Make sure that the hosting sampler is level.

Sample Temperature Control Switched Off Due to Overpressure

Error ID: 30716

The pressure in the refrigerant circuit exceeded the maximum allowed level. To prevent any damage to the system, the compressor was turned off.

Probable cause		Suggested actions
1	Overheated condenser.	• Turn off the cooler/thermostat and wait for 15 min to allow the system to cool down. Verify if there is enough space around the sampler for adequate ventilation and the cooler/thermostat is not exposed to direct sunlight.
2	Potential hardware error.	• Please contact your Agilent service representative.

Sample Temperature Control Sensor Electronics Calibration Failed

Error ID: 30717

The system is in an error state because the calibration of the analog temperature sensor has failed.

Probable cause		Suggested actions
1	Sampler incompatibility.	• If the hosting sampler is a Vialsampler, verify its compatibility with the Sample Cooler installed. Units with the serial number DEBAT02000 or below are equipped with an analog temperature sensor that is not compatible with the Vialsampler.
2	Potential hardware error.	• Please contact your Agilent service representative.

Sample Temperature Control Switched Off Due to Supply Voltage Drop

Error ID: 30718

The compressor is turned off due to an unexpected drop in the supply voltage.

Probable cause		Suggested actions
1	Potential hardware error.	• Please contact your Agilent service representative.

Cooler Condensate Sensor Defect

Error ID: 30719

The condensate sensor of the cooler/thermostat is not working properly.

Probable cause		Suggested actions
1	Potential hardware error.	• Please contact your Agilent service representative.

Cooler PCB Is in Error Mode

Error ID: 30725

The system is in an error state because the compressor control board has encountered an unexpected error.

Probable cause		Suggested actions
1	Potential hardware error.	• Please contact your Agilent service representative.

Cooler Condenser Fan Failed

Error ID: 30726

The condenser fan of the cooler is not working properly.

Probable cause		Suggested actions
1	Potential hardware error.	• Please contact your Agilent service representative.

Thermostat Communication Error

Error ID: 30738

The system is in an error state because the communication between the sampler and the thermostat has failed.

Probable cause		Suggested actions
1	Potential hardware error.	• Please contact your Agilent service representative.

Heater Defect

Error ID: 30739

One of the heating elements is malfunctioning or broken.

Probable cause		Suggested actions
1	Potential hardware error.	• Please contact your Agilent service representative.

Heater in Operating Error

Error ID: 30744

The system is in an error state because the thermostat heater has encountered an unexpected error.

Probable cause		Suggested actions
1	Potential hardware error.	• Please contact your Agilent service representative.

Heater Has Power Supply Failure

Error ID: 30745

The voltage measured at the electric amplifier is below the expected level.

Probable cause		Suggested actions
1	Potential hardware error.	• Please contact your Agilent service representative.

Thermostat Sensor Defect

Error ID: 30751

One of the digital temperature sensors of the cooler/thermostat is not working properly.

- Error ID: 30751,0 → Thermostat sensor defect
- Error ID: 30751,1 → Thermostat sensor defect - evaporator temperature sensor defect
- Error ID: 30751,2 → Thermostat sensor defect - condenser temperature sensor defect
- Error ID: 30751,3 → Thermostat sensor defect - external temperature sensor defect
- Error ID: 30751,4 → Thermostat sensor defect - evaporator superheat sensor defect

Probable cause		Suggested actions
1	Potential hardware error.	• Please contact your Agilent service representative.

Compressor Has Error

Error ID: 30756

The system is in an error state because the control board of the compressor has encountered an unexpected error.

Probable cause		Suggested actions
1	Potential hardware error.	• Please contact your Agilent service representative.

Sample Thermostat Type Unknown, Update Firmware

Error ID: 30768

The system is in an error state because the type of the thermostat is unsupported by the current firmware revision.

Probable cause		Suggested actions
1	Potential hardware error.	• Please contact your Agilent service representative.

Thermostat Fan Defect

Error ID: 30771

One of the cooling fans of the cooler/thermostat is not working properly.

This error event indicates that either the condenser fan or the evaporator fan is not working properly.

- Error ID: 30771,0 → Thermostat fan defect
- Error ID: 30771,1 → Thermostat fan defect – evaporator fan defect
- Error ID: 30771,2 → Thermostat fan defect – condenser fan defect

Probable cause		Suggested actions
1	Potential hardware error.	• Please contact your Agilent service representative.

Integrated Column Compartment (ICC) Heater Error Messages

Wait for Temperature Function Timed Out

Error ID: 30820

The system reported an error because reaching the set temperature took longer than expected. To verify the correct functioning of the heating, perform the Heater Test in the Agilent Lab Advisor software.

Probable cause		Suggested actions
1	Connection problems.	• Power off the system and verify that the ICC is correctly mounted in the sampler. • Power on the system and check if the problem persists.
2	Potential hardware error.	• Please contact your Agilent service representative.

Heater Over-Current Protection Active

Error ID: 30821

The heating function of the Integrated Column Compartment is switched due to overcurrent.

To verify the correct functioning of the heating element, perform the **Heater Test** in the Agilent Lab Advisor software.

Probable cause		Suggested actions
1	Connection problems.	• Power off the system and verify that the ICC is correctly mounted in the sampler. • Power on the system and check if the problem persists.
2	Potential hardware error.	• Please contact your Agilent service representative.

A Heater Sensor Reading Failed

Error ID: 30822

The heating function of the Integrated Column Compartment is switched off due to the malfunctioning of the digital temperature sensor.

To verify the correct functioning of the heating element, perform the **Heater Test** in the Agilent Lab Advisor software.

Probable cause		Suggested actions
1	Connection problems.	• Power off the system and verify that the ICC is correctly mounted in the sampler. • Power on the system and check if the problem persists.
2	Potential hardware error.	• Please contact your Agilent service representative.

Trend Analysis for the Heater Temperature Sensors Failed

Error ID: 30823

The heating function of the Integrated Column Compartment is switched off because the trend analysis of the reading from the digital temperature sensor has failed.

To verify the correct functioning of the heating element, perform the Heater Test in the Agilent Lab Advisor software.

Probable cause		Suggested actions
1	Connection problems.	• Power off the system and verify that the ICC is correctly mounted in the sampler. • Power on the system and check if the problem persists.
2	Potential hardware error.	• Please contact your Agilent service representative.

Maximum Heater Temperature Exceeded

Error ID: 30824

The heating function of the Integrated Column Compartment is switched off because the temperature registered by the temperature sensor exceeds the upper limit (100 °C).

To verify the correct functioning of the heating element, perform the **Heater Test** in the Agilent Lab Advisor software

Probable cause		Suggested actions
1	Connection problems.	• Power off the system and verify that the ICC is correctly mounted in the sampler. • Power on the system and check if the problem persists.
2	Potential hardware error.	• Please contact your Agilent service representative.

Column Heater Not Connected

Error ID: 30825

The Integrated Column Compartment is either not connected or cannot be recognized by the system.

Probable cause		Suggested actions
1	Connection problems.	• Power off the system and verify that the ICC is correctly mounted in the sampler. • Power on the system and check if the problem persists.
2	Potential hardware error.	• Please contact your Agilent service representative.

8 Maintenance

It is necessary to perform periodic inspection of the instrument to ensure its safe use. It is possible to have these periodic inspections performed by Agilent service representatives on a contractual basis. For information regarding the maintenance inspection contract, contact your Agilent representative.

Safety Information Related to Maintenance 256

Introduction to Maintenance 258

Overview of Maintenance 259

Cleaning the Module 260

Remove and Install Doors 261

Exchange the Needle Assembly 264

Exchange the Needle Seat Assembly 273

Exchange the Sample Loop Assembly 282

Exchange the Rotor Seal 288

Exchange the Metering Seal and Piston 295

Replace the Analytical Head 302

Exchange the Gripper Arm 306

Replace the Finger Caps 311

Replace the Peristaltic Pump Cartridge 313

Exchange the Wash Port Assembly 317

Replace the Module Firmware 326

Replace the Sample Thermostat 327

Safety Information Related to Maintenance

WARNING Fire and damage to the module

Wrong fuses

- Make sure that only fuses with the required rated current and of the specified type (super-fast, fast, time delay etc) are used for replacement.
- The use of repaired fuses and the short-circuiting of fuse-holders must be avoided.

WARNING Heavy weight

The module is heavy.

- Carry the module at least with 2 people.
- Avoid back strain or injury by following all precautions for lifting heavy objects.
- Ensure that the load is as close to your body as possible.
- Ensure that you can cope with the weight of your load.

WARNING Personal injury or damage to the product

Agilent is not responsible for any damages caused, in whole or in part, by improper use of the products, unauthorized alterations, adjustments or modifications to the products, failure to comply with procedures in Agilent product user guides, or use of the products in violation of applicable laws, rules or regulations.

- Use your Agilent products only in the manner described in the Agilent product user guides.

WARNING Electrical shock

Repair work at the module can lead to personal injuries, e.g. shock hazard, when the cover is opened.

- Do not remove the cover of the module.
- Only certified persons are authorized to carry out repairs inside the module.

WARNING

Sharp metal edges

Sharp-edged parts of the equipment may cause injuries.

- **To prevent personal injury, be careful when getting in contact with sharp metal areas.**

WARNING

Toxic, flammable and hazardous solvents, samples and reagents

The handling of solvents, samples and reagents can hold health and safety risks.

- **When working with these substances observe appropriate safety procedures (for example by wearing goggles, safety gloves and protective clothing) as described in the material handling and safety data sheet supplied by the vendor, and follow good laboratory practice.**
- **The volume of substances should be reduced to the minimum required for the analysis.**
- **Do not operate the instrument in an explosive atmosphere.**

CAUTION

Safety standards for external equipment

- If you connect external equipment to the instrument, make sure that you only use accessory units tested and approved according to the safety standards appropriate for the type of external equipment.

Introduction to Maintenance

The module is designed for easy maintenance. Maintenance can be done from the front with module in place in the system stack.

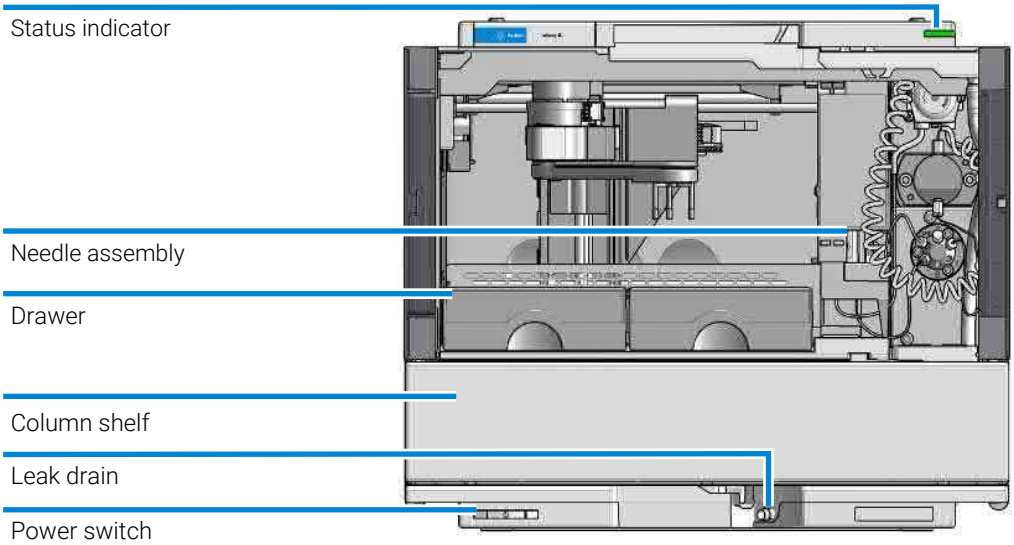

Figure 33: Overview of the Vialsampler

Overview of Maintenance

It is necessary to perform periodic inspection of this instrument to ensure its safe use. It is possible to have these periodic inspections performed by Agilent service representatives on a contractual basis. For information regarding the maintenance inspection contract, contact your Agilent representative.

The following pages describe the maintenance (simple repairs) of the module that can be carried out without opening the main cover.

Table 24: Overview of maintenance

Procedure	Typical interval (minimum)
Change needle/needle seat	30000 needle into seat movements
Change peristaltic pump cartridge	3000 h on time
Change rotor seal	30000 injections
Change metering seal	30000 injections

Cleaning the Module

To keep the module case clean, use a soft cloth slightly dampened with water, or a solution of water and mild detergent. Avoid using organic solvents for cleaning purposes. They can cause damage to plastic parts.

WARNING

Liquid dripping into the electronic compartment of your module can cause shock hazard and damage the module

- **Do not use an excessively damp cloth during cleaning.**
- **Drain all solvent lines before opening any connections in the flow path.**

NOTE

A solution of 70 % isopropanol and 30 % water might be used if the surface of the module needs to be disinfected.

Remove and Install Doors

When

- The instrument doors or the hinges are broken.

Tools required

Qty.	p/n	Description
1	5023-3138	Reversible Screwdriver + Blade 1,0 x 5,5

Parts required

Qty.	p/n	Description
1	5004-0049	Door Kit for Infinity III Vialsampler
		OR
1	G7129-68002	Door Kit for Infinity II Vialsampler, Latched

Preparations

- Finish any pending acquisition job.

NOTE

The figures shown in this procedure exemplarily show the Infinity III Vialsampler module. The principle of how to remove and/or install doors works in the same way for all Infinity III modules.

1 Press the release buttons and pull the front door out.

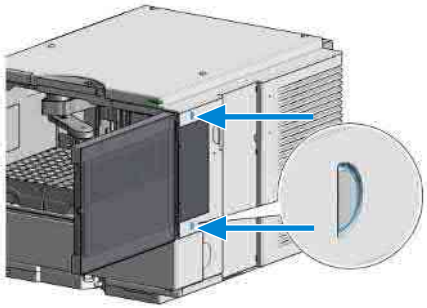

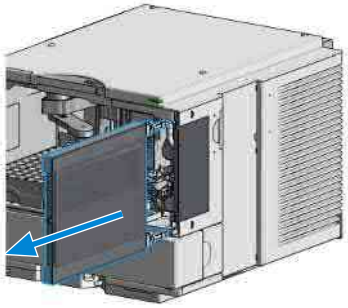

2 For the Installation of the front door, insert the hinges into their guides and push the door in until the release buttons click into their final position.

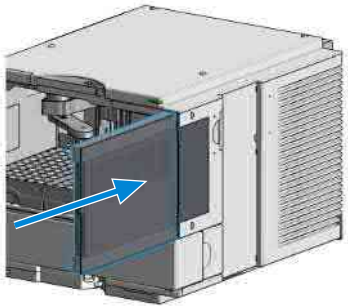

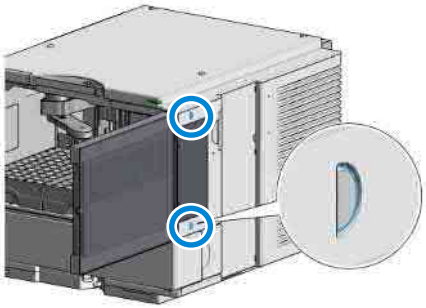

Exchange the Needle Assembly

When

- The needle is visibly damaged.
- Leaks or blockages are observed.
- The limit for the needle interaction EMF counter is exceeded.
- The needle needs to be replaced as part of the yearly maintenance.

Tools required

Qty.	p/n	Description
1	8710-0510	Open-end wrench 1/4-5/16 inch
1	5182-3466	Torx screwdriver T10

Parts required

Qty.	p/n	Description
1	G7129-87200	Needle assembly, 1260 Vialsampler for G7129-87017 needle seat
		OR
1	G7129-87201	Needle assembly, 1290 Vialsampler for G7129-87012 needle seat
		OR
1	G7129-87202	Needle assembly, slotted, for high injection volumes

Preparations

- Finish any pending acquisition job.
- Stop the flow at the pump and remove the solvent lines from the eluent bottles to avoid spilling solvent.
- Close the shutoff valves at the pump if available.

WARNING

Toxic, flammable and hazardous solvents, samples and reagents

The handling of solvents, samples and reagents can hold health and safety risks.

— **When working with these substances observe appropriate safety procedures (for example by wearing goggles, safety gloves and protective clothing) as described in the material handling and safety data sheet supplied by the vendor, and follow good laboratory practice.**

WARNING

Risk of injury by uncovered needle

An uncovered needle is a risk of harm to the operator.

- **Do not open the safety cover of the needle station during normal operation.**
- **Wear safety goggles and safety gloves when removing the needle assembly.**

NOTE

It is recommended to always exchange the needle assembly and the needle seat at the same time to prevent premature leakage.

NOTE

When the instrument setup has changed, configure the new setup in the online view of the Chromatographic Data System. See Table 18 on page 136.

InfinityLab Assist

InfinityLab Assist provides you with assisted troubleshooting and maintenance at your instrument.

If the system in use supports the InfinityLab Assist, follow the instructions provided. Else, the preferred solution is to use Agilent Lab Advisor Software.

1 In the Agilent Lab Advisor software select Service & Diagnostics > Maintenance Positions > Change Needle, Loop and Seat , click Start and wait until the needle assembly is in maintenance position.

   OR: In the Local Controller start the maintenance mode and select Change Needle, Loop and Seat function.

2 Open the doors of the module.

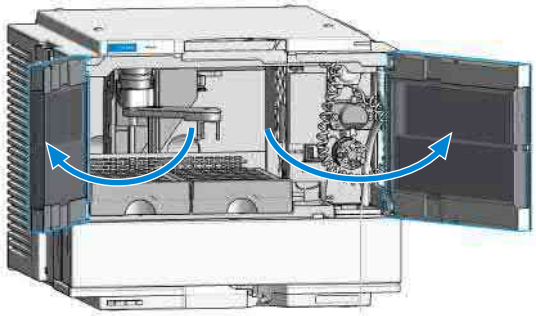

3 Loosen the safety cover screw.

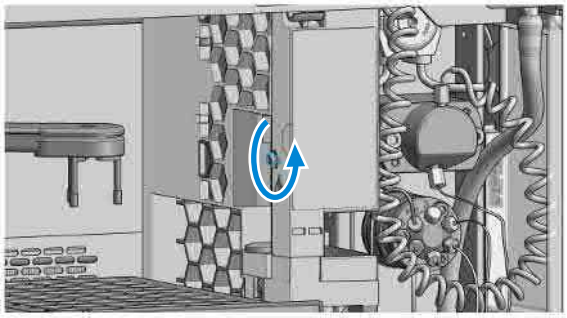

WARNING

Sharp needle

Uncovered needles may cause injuries

— **Do not touch the tip of the needle.**

4 Remove the safety cover.

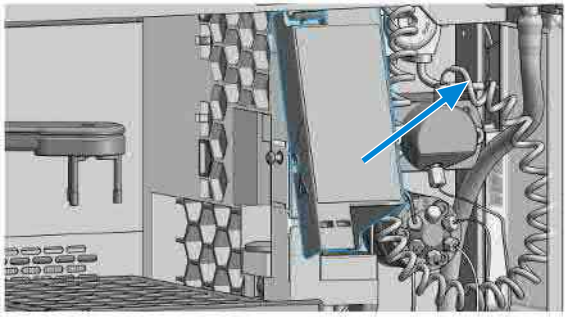

WARNING

Sharp needle

Uncovered needles may cause injuries.

- **Do not change the needle seat at this point.**
- **Do not touch the tip of the needle.**

5 Move the wash port into the service position by slightly lifting it up and then flapping to the left.

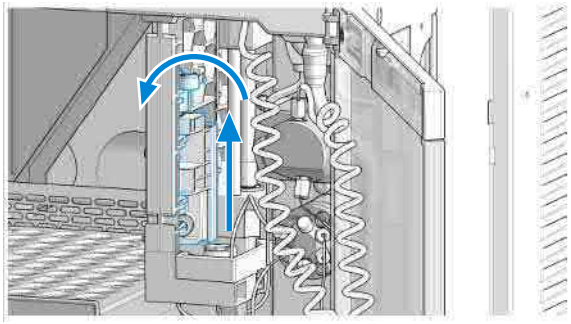

6 In Lab Advisor use **Next** to move the needle in the down position (ca. 2 mm above the seat).

OR: In the Local Controller, move the needle down until the needle tip is ca. 2 – 4 mm above the seat.

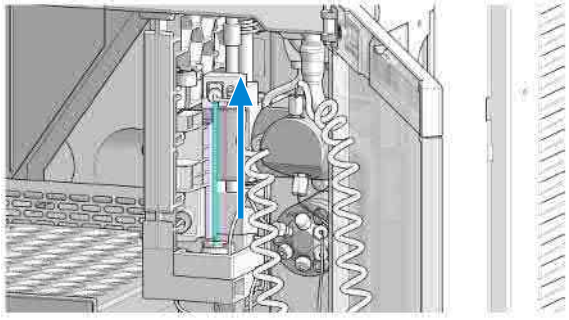

7 Disconnect the sample loop from the needle, and, if needed, also from the metering device.

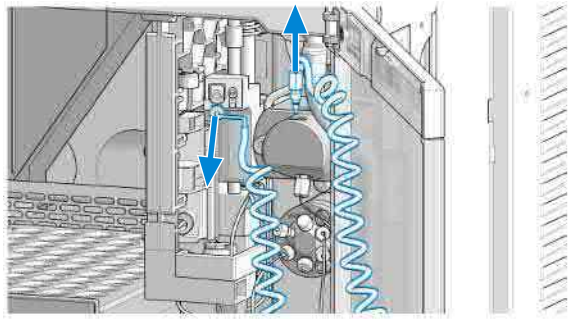

8 Loosen the fixing screw.

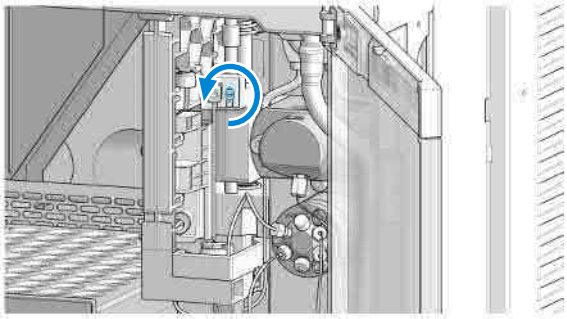

9 Lift out the needle.

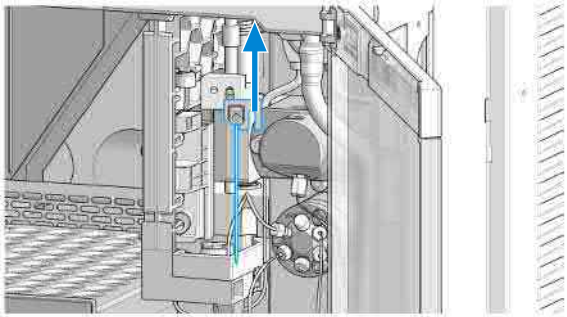

10 Mount and align the needle on its fixture, then tighten the screw firmly.

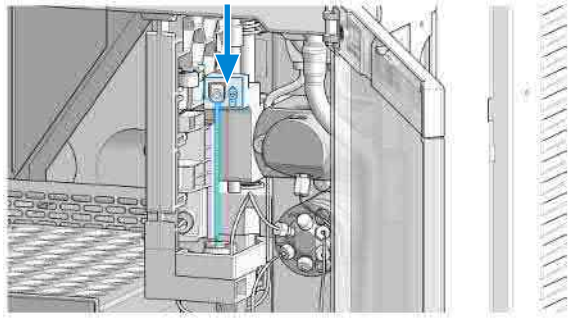

11 Align the needle tip with the seat and ensure that they are concentric. If needed, carefully bend the needle into the right position with your fingers.

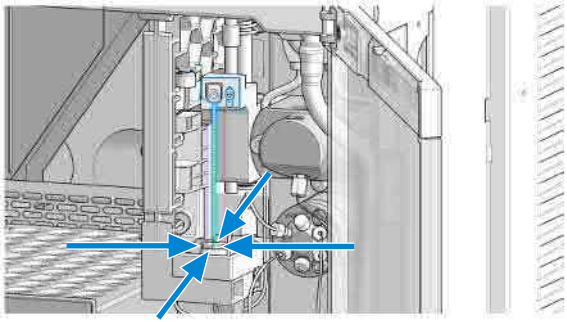

12 Reconnect the sample loop to the needle. Make sure of the correct positioning of the loop capillary, the uncoated part of the capillary must be horizontal.

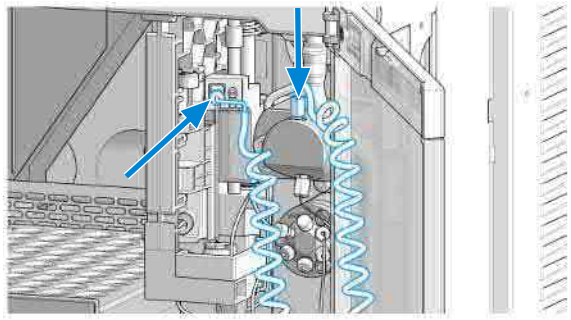

NOTE Do not overtighten the fitting!

NOTE Incorrect positioning and installation of the needle/loop connection can result in damaging or breaking the sample loop.

13 In Lab Advisor use **Next** to lift the needle slowly into the up position.

OR: In the Local Controller, move the needle up to the uppermost position.

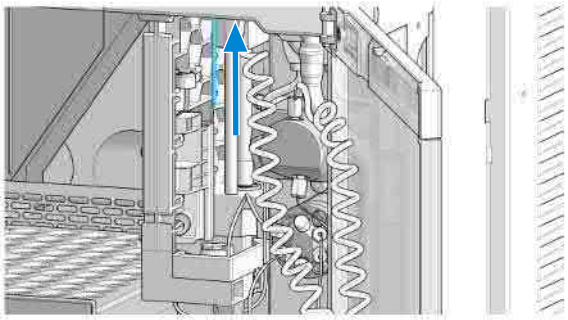

14 Move the wash port back into its normal position by turning it to the right.

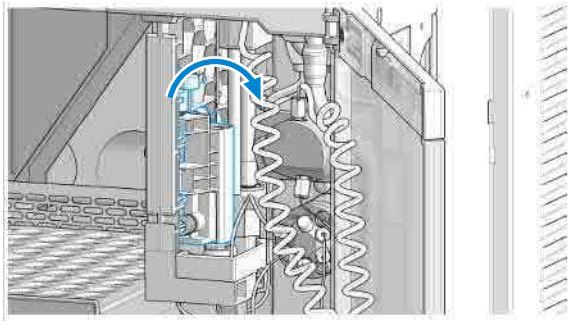

15 Install the safety cover (1.) and fix the screw (2.).

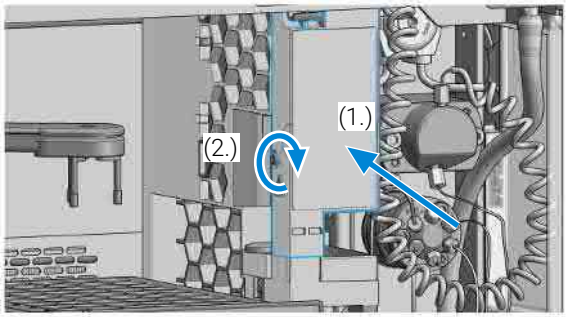

16 In Lab Advisor, select **Next** to move the needle into the needle seat and then **Back** to finish the maintenance procedure.

OR: In the Local Controller, select **Continue** to move the needle into the needle seat and then **Exit** to finish the maintenance procedure.

17 Close the doors.

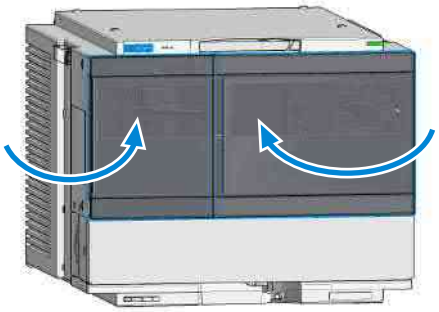

18 Perform a System Pressure Test.

Exchange the Needle Seat Assembly

When

- The seat is visibly damaged.
- Leaks or blockages are observed.
- The limit for the seat interaction EMF counter is exceeded.
- The needle seat needs to be replaced as part of the yearly maintenance.

Tools required

Qty.	p/n	Description
1	8710-0510	Open-end wrench 1/4-5/16 inch
1	5182-3466	Torx screwdriver T10
1	5023-3138	Reversible Screwdriver + Blade 1,0 x 5,5

Parts required

Qty.	p/n	Description
1	G7129-87017	Seat Assembly, 1260 Vialsampler, PEEK, 0.17 mm
		OR
1	G7129-87012	Seat Assembly, 1290 Vialsampler, PEEK, 0.12 mm
		OR
1	G7129-87117	Seat Assembly, 1260 Vialsampler, Vespel, 0.17 mm
		OR
1	G7129-87112	Seat Assembly, 1290 Vialsampler, Vespel, 0.12 mm

Preparations

- Finish any pending acquisition job.
- Stop the flow at the pump and remove the solvent lines from the eluent bottles to avoid spilling solvent.
- Close the shutoff valves at the pump if available.

WARNING

Risk of injury by uncovered needle

An uncovered needle is a risk of harm to the operator.

- **Do not open the safety cover of the needle station during normal operation.**
- **Wear safety goggles and safety gloves when removing the needle assembly.**

NOTE

When the instrument setup has changed, configure the new setup in the online view of the Chromatographic Data System. See Table 18 on page 136.

NOTE It is recommended to always exchange the needle assembly and the needle seat at the same time to prevent premature leakage.

NOTE The use of a Vespel needle seat (G7129-87112 and G7129-87117) limits the maximum system pressure to 600 bar.

InfinityLab Assist

InfinityLab Assist provides you with assisted troubleshooting and maintenance at your instrument.

If the system in use supports the InfinityLab Assist, follow the instructions provided. Else, the preferred solution is to use Agilent Lab Advisor Software.

1 In the Agilent Lab Advisor software select Service & Diagnostics > Maintenance Positions > Change Needle, Loop and Seat , click Start and wait until the needle assembly is in maintenance position.

   OR: In the Local Controller start the maintenance mode and select Change Needle, Loop and Seat function.

2 Open the doors of the module.

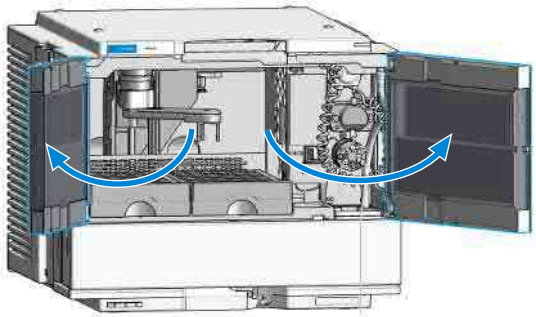

3 Loosen the safety cover screw.

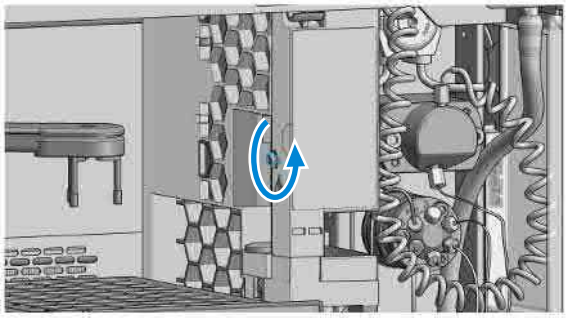

WARNING

Sharp needle

Uncovered needles may cause injuries

— **Do not touch the tip of the needle.**

4 Remove the safety cover.

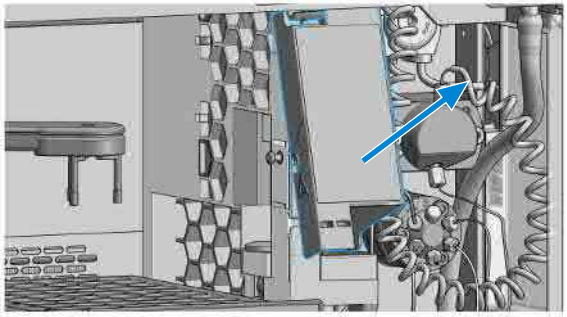

WARNING

Sharp needle

Uncovered needles may cause injuries.

- **Do not change the needle seat at this point.**
- **Do not touch the tip of the needle.**

5 Move the wash port into the service position by slightly lifting it up and then flapping to the left.

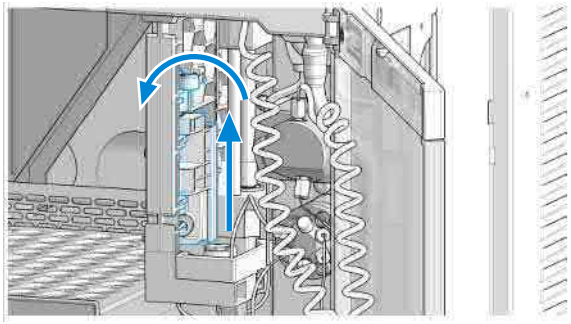

6 In Lab Advisor use **Next** to move the needle in the down position (ca. 2 mm above the seat).

OR: In the Local Controller, move the needle down until the needle tip is ca. 2 – 4 mm above the seat.

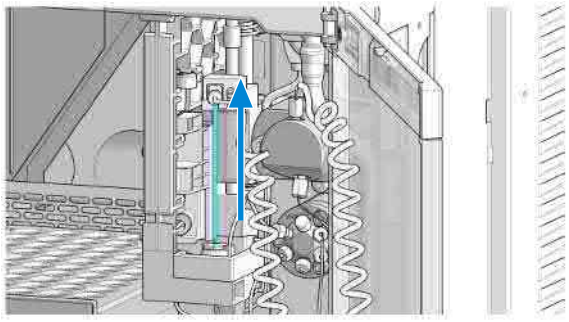

7 Disconnect the sample loop from the needle, and, if needed, also from the metering device.

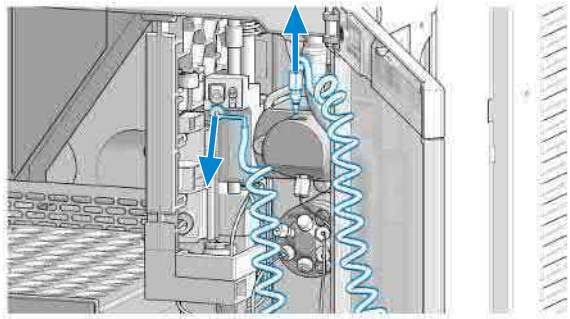

8 Loosen the fixing screw.

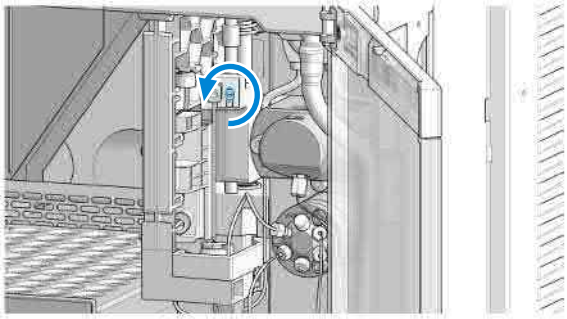

9 Lift out the needle.

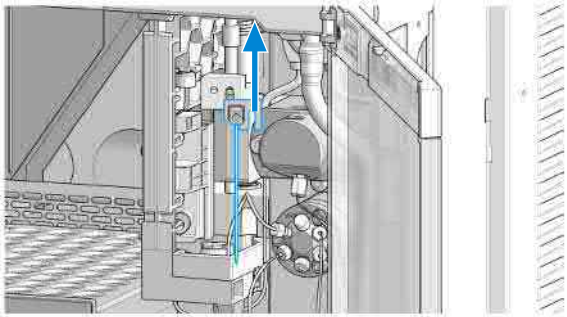

10 Disconnect the seat capillary fitting from the injection valve (port 5) and ease out the needle seat from the leak tray with the help of a flathead screwdriver.

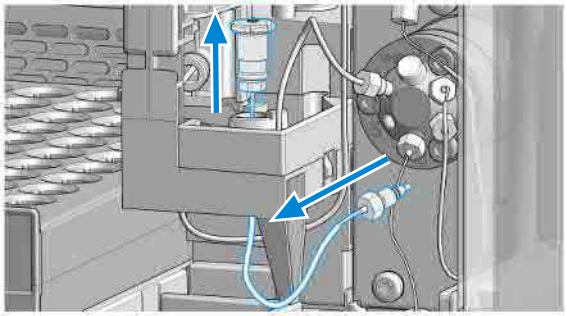

11 Insert the new needle seat and press it firmly into position. Then, connect the seat capillary fitting to port 5 of the injection valve.

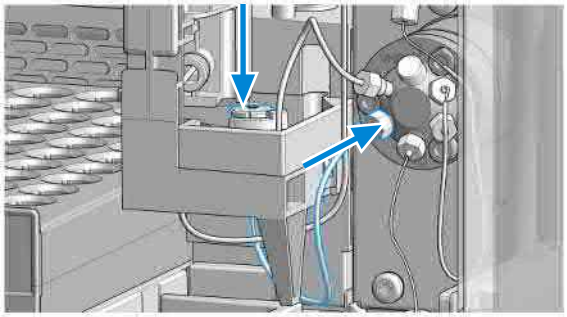

12 Mount and align the needle on its fixture, then tighten the screw firmly.

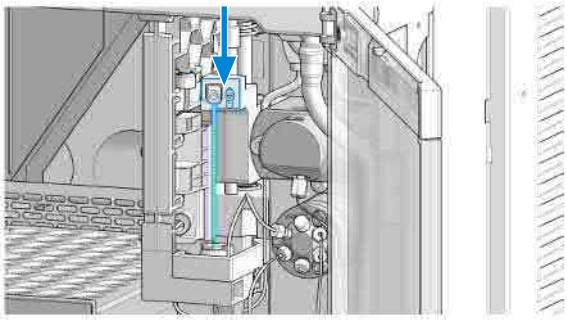

13 Align the needle tip with the seat and ensure that they are concentric. If needed, carefully bend the needle into the right position with your fingers.

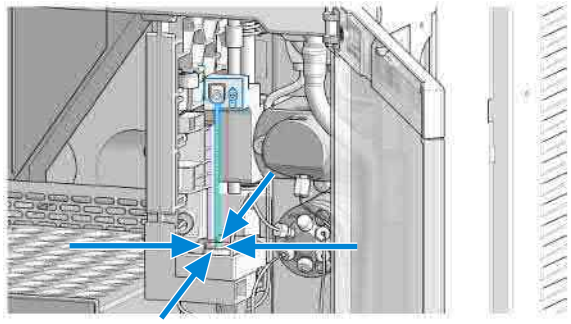

14 Reconnect the sample loop to the needle. Make sure of the correct positioning of the loop capillary, the uncoated part of the capillary must be horizontal.

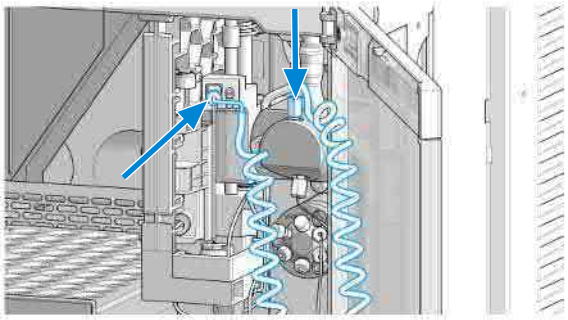

NOTE Do not overtighten the fitting!

NOTE Incorrect positioning and installation of the needle/loop connection can result in damaging or breaking the sample loop.

15 In Lab Advisor use **Next** to lift the needle slowly into the up position.

OR: In the Local Controller, move the needle up to the uppermost position.

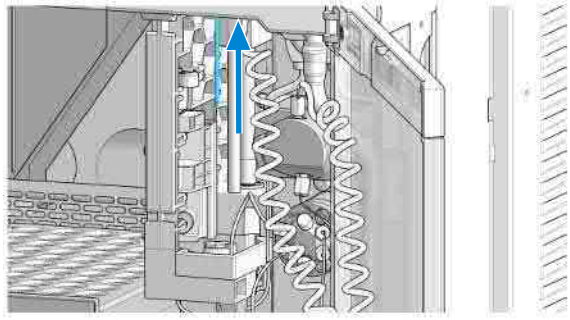

16 Move the wash port back into its normal position by turning it to the right.

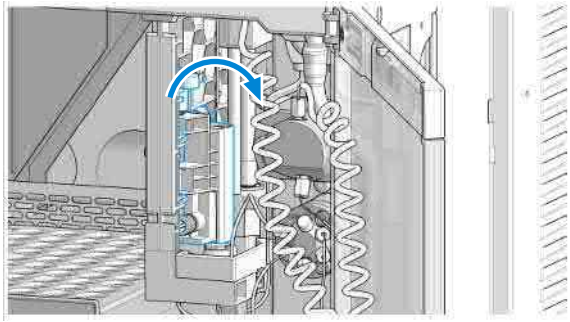

17 Install the safety cover (1.) and fix the screw (2.).

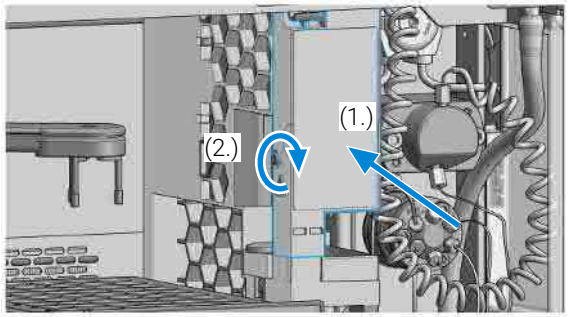

18 In Lab Advisor, select **Next** to move the needle into the needle seat and then **Back** to finish the maintenance procedure.

OR: In the Local Controller, select **Continue** to move the needle into the needle seat and then **Exit** to finish the maintenance procedure.

19 Close the doors.

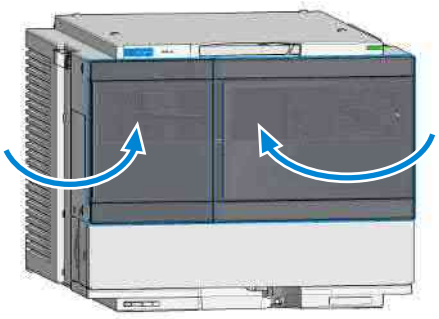

20 Perform a System Pressure Test.

Exchange the Sample Loop Assembly

When

- The sample loop is visibly damaged.
- Leaks or blockages are observed.

Tools required

Qty.	p/n	Description
1	8710-0510	Open-end wrench 1/4-5/16 inch

Parts required

Qty.	p/n	Description
1	G7129-60500	Sample Loop 100 µL
		OR
1	G7129-60400	Sample Loop 40 µL
		OR
1	G7129-60300	Sample Loop 20 µL

Preparations

- Finish any pending acquisition job.
- Stop the flow at the pump and remove the solvent lines from the eluent bottles to avoid spilling solvent.
- Close the shutoff valves at the pump if available.

WARNING

Risk of injury by uncovered needle

An uncovered needle is a risk of harm to the operator.

- **Do not open the safety cover of the needle station during normal operation.**
- **Wear safety goggles and safety gloves when removing the needle assembly.**

NOTE

When the instrument setup has changed, configure the new setup in the online view of the Chromatographic Data System. See Table 18 on page 136.

1 In the Agilent Lab Advisor software select Service & Diagnostics > Maintenance Positions > Change Needle, Loop and Seat , click Start and wait until the needle assembly is in maintenance position.

OR: In the Local Controller start the maintenance mode and select Change Needle, Loop and Seat function.

2 Open the doors of the module.

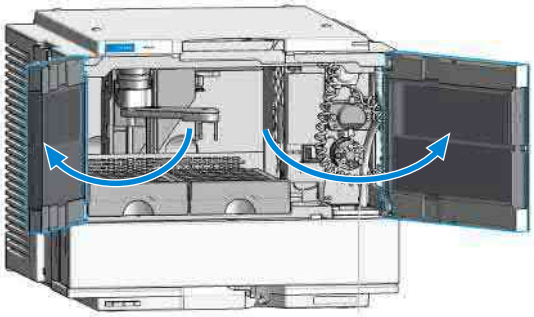

3 Loosen the safety cover screw.

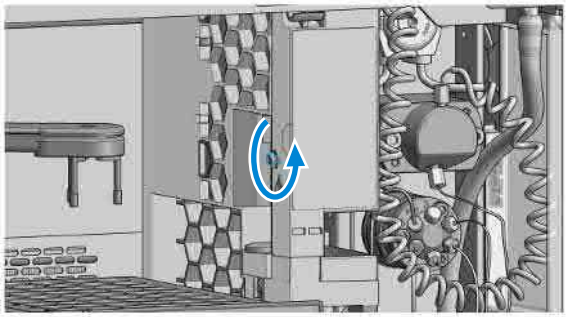

WARNING

Sharp needle

Uncovered needles may cause injuries

— **Do not touch the tip of the needle.**

4 Remove the safety cover.

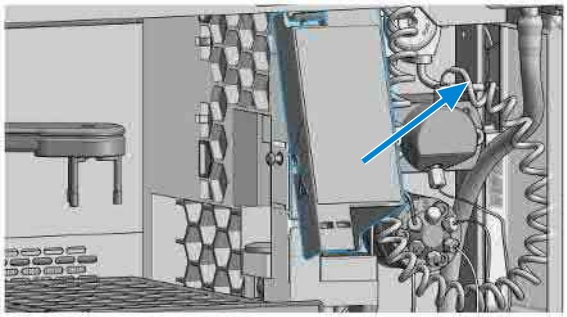

WARNING **Sharp needle**

Uncovered needles may cause injuries.

- **Do not change the needle seat at this point.**
- **Do not touch the tip of the needle.**

5 Move the wash port into the service position by slightly lifting it up and then flapping to the left.

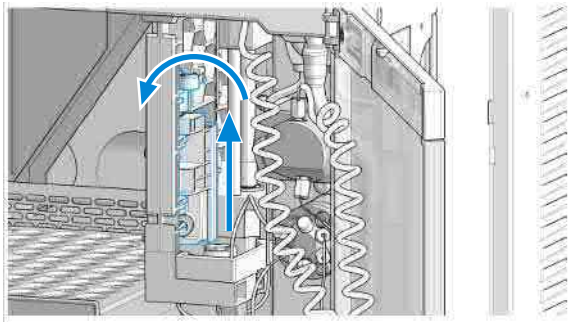

6 In Lab Advisor use **Next** to move the needle in the down position (ca. 2 mm above the seat).

OR: In the Local Controller, move the needle down until the needle tip is ca. 2 – 4 mm above the seat.

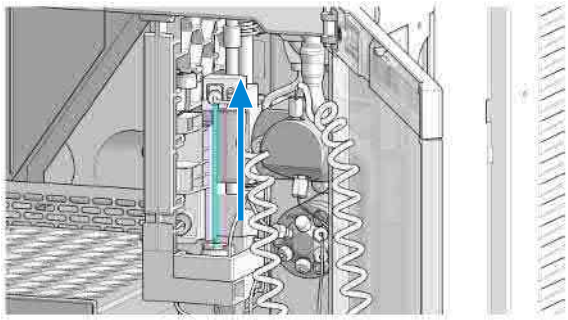

7 Disconnect the loop capillary from the metering device and from the needle.

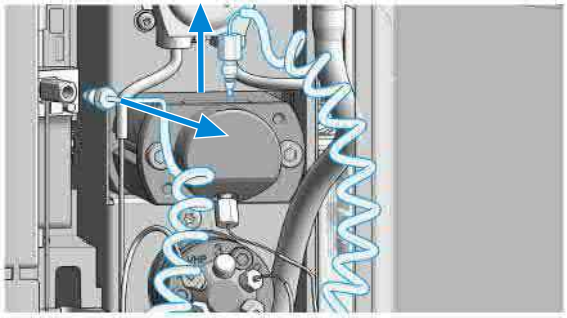

8 Install the new sample loop. Make sure of the correct positioning of the loop capillary, the uncoated part of the capillary must be horizontal.

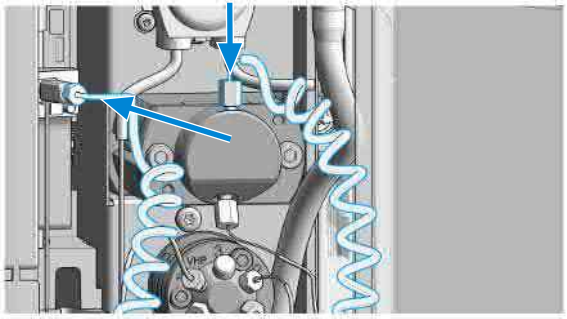

NOTE

Incorrect positioning and installation of the needle/loop connection can result in damaging and breaking the sample loop.

9 After installing the new sample loop, ensure that the needle tip is concentric with the seat.

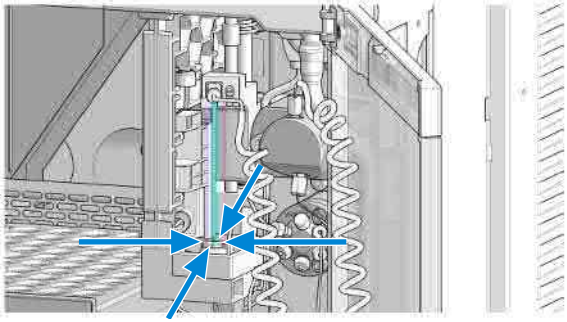

10 Click on **Next** in the LabAdvisor to lift the Needle up again.

OR: In the Local Controller, move the needle up to the uppermost position.

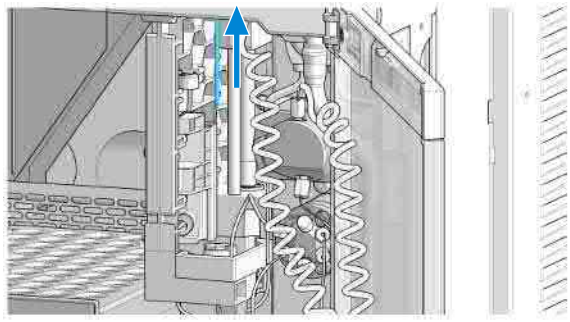

11 Move the wash port back into its normal position by turning it to the right.

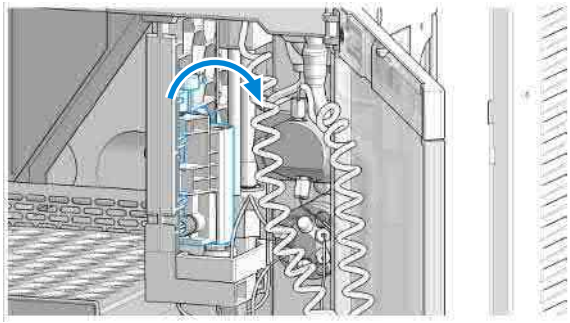

12 Install the safety cover (1.) and fix the screw (2.).

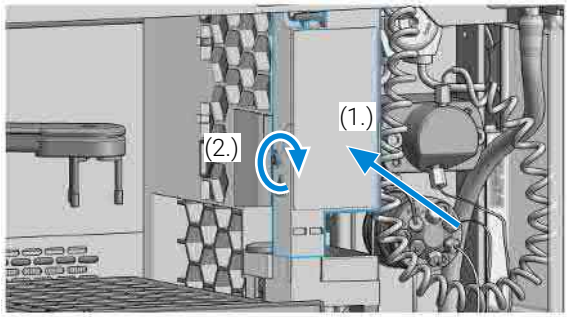

13 In Lab Advisor, select **Next** to move the needle into the needle seat and then **Back** to finish the maintenance procedure.

OR: In the Local Controller, select **Continue** to move the needle into the needle seat and then **Exit** to finish the maintenance procedure.

14 Close the doors.

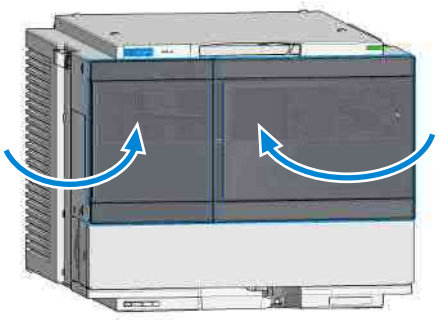

15 Perform a System Pressure Test.

Exchange the Rotor Seal

When

- Injection volume reproducibility problems are observed.
- Leaks or blockages are observed.
- The limit for the rotor seal EMF counter is exceeded.
- The rotor seal needs to be replaced as part of the yearly maintenance.

Tools required

Qty.	p/n	Description
1	8710-0510	Open-end wrench 1/4-5/16 inch
1	8710-2394	Hex key 9/64 inch 15 cm long T-handle
1	05980-60051	Cloths, clean, lint-free 15/pk
1		Isopropanol or any other appropriate solvent

Parts required

Qty.	p/n	Description
1	5068-0007	Rotor Seal, Vespel, 1300 bar for 1290 Injection Valve **OR**
1	0101-1416	Rotor Seal, PEEK, 600/800 bar for 1260 Injection Valve

Preparations

- Finish any pending acquisition job.
- Stop the flow at the pump and remove the solvent lines from the eluent bottles to avoid spilling solvent.
- Close the shutoff valves at the pump if available.

CAUTION

Reduced life time of the injection valve

Component cleanliness is crucial for the life time of the injection valve.

— Replace the rotor seal in a clean environment.

CAUTION

Removing the stator head

The stator face is held in place by the stator head. When you remove the stator head, the stator face can fall out of the valve.

— Carefully handle the valve to prevent damage to the stator face.

— Carefully handle the stator face during sonication.

1 Open the doors of the module.

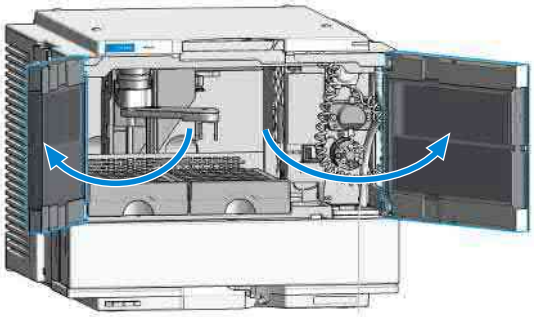

2 Remove all capillaries from the injection valve with a 1/4 inch wrench.

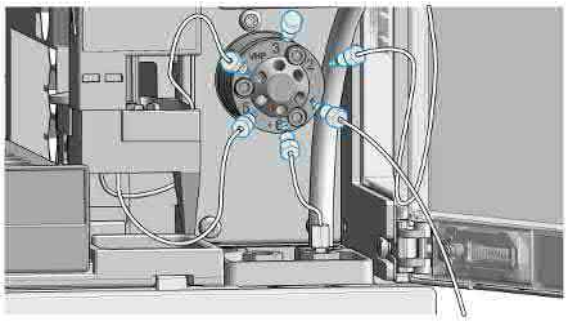

3 Loosen each fixing bolt two turns at a time. Remove the bolts from the head.

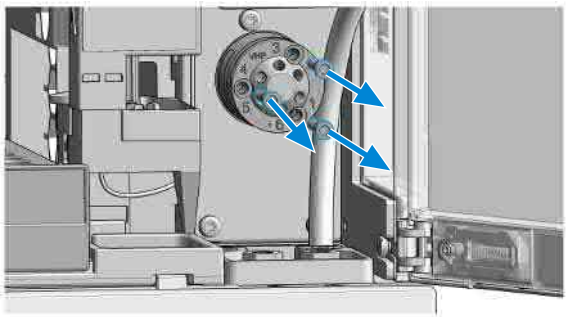

4 Remove the stator head and stator ring.

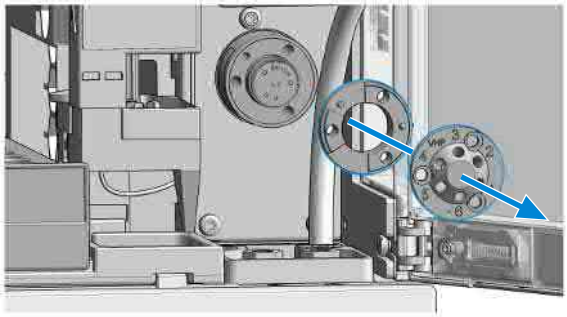

5 Remove the rotor seal and isolation seal (bearing ring).

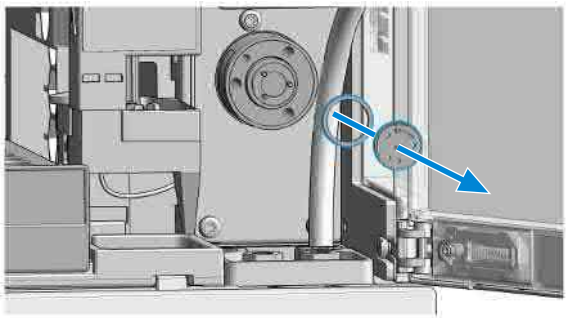

CAUTION

Damage to the rotor seal and cross-port leaks

- Before you replace the rotor seal, clean the stator.
- Inspect the stator head and swab it with the appropriate solvent. If more stringent cleaning is required, use a sonicator. Inspect the remaining valve components for contamination. Clean them as necessary.
- If the stator head is scratched, replace it.

6 Install the new rotor seal and isolation seal (bearing ring).

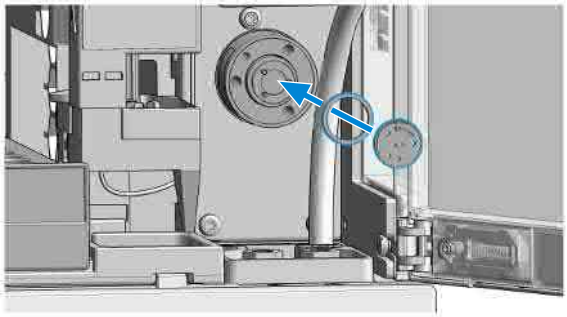

NOTE

Make sure that the rotor sealing surface with its engraved flow passages is facing out. The pattern is asymmetrical to prevent improper placement.

7 Install the stator ring with the short of the two pins facing towards you at the 12 o'clock position. Ensure the ring sits flat on the valve body.

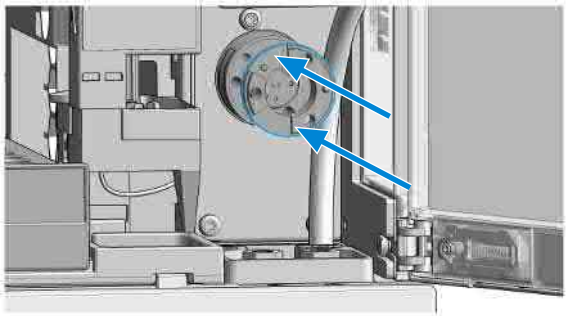

8 Install the stator head. Tighten the bolts alternately two turns at a time until the stator head is secure.

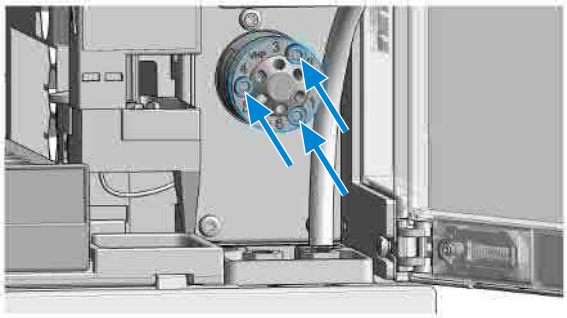

NOTE

Do not overtighten the screws. The screws hold the assembly together and do not affect the sealing force. The sealing force is automatically set as the screws close the stator head against the valve body.

9 Reconnect the capillaries and tubes to the valve ports.

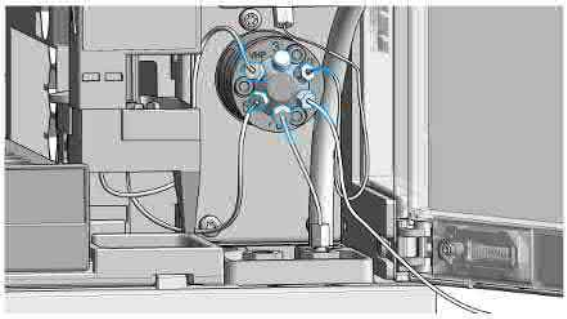

The correct plumbing is shown below and on the safety cover of the module.

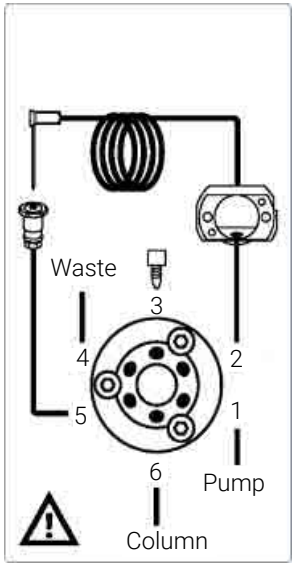

10 Slide the waste tube into the waste holder in the leak tray.

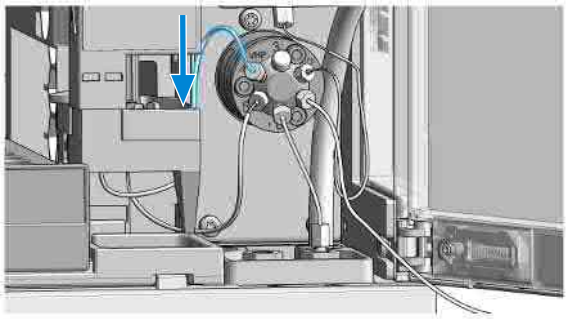

11 Close the doors.

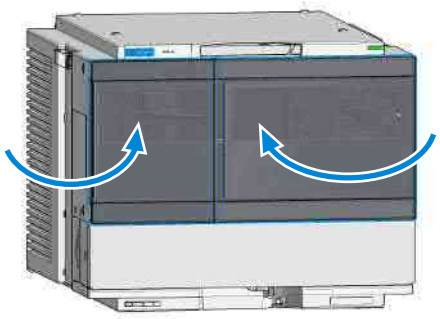

12 Perform a System Pressure Test.

Exchange the Metering Seal and Piston

When

- Injection volume reproducibility problems are observed.
- Leaks or blockages are observed.
- The limit for the metering seal EMF counter is exceeded.
- The metering seal needs to be replaced as part of the yearly maintenance.

Tools required

Qty.	p/n	Description
1	8710-0510	Open-end wrench 1/4-5/16 inch
1	5023-2524	Hex Key Set (part of the G7120-62708 InfinityLab LC Series Tool Kit)
1	01018-23702	Insert tool (for 100 µL analytical head)
1	G4226-43800	Seal insert tool (for 40 µL analytical head)
1		Pair of tweezers
1	05980-60051	Cloths, clean, lint-free 15/pk
1		Isopropanol or any other appropriate solvent

Parts required

Qty.	p/n	Description
1	0905-1717	Metering Seal, 40 µL **OR**
1	0905-1503	Metering Seal, 100 µL **OR**
1	0905-1294	Metering Seal, 900 µL
1	5067-5920	Piston, 40 µL, Zirconium oxide for 40 µL analytical head **OR**
1	5067-5678	Piston, 100 µL, Zirconium oxide for 100 µL analytical head **OR**
1	G4267-60462	Piston, 900 µL, Sapphire

Preparations

- Finish any pending acquisition job.
- Stop the flow at the pump and remove the solvent lines from the eluent bottles to avoid spilling solvent.
- Close the shutoff valves at the pump if available.

NOTE

When the instrument setup has changed, configure the new setup in the online view of the Chromatographic Data System. See Table 18 on page 136.

1 In the Agilent Lab Advisor software, select **Service & Diagnostics** > **Maintenance Positions** > **Change Metering Seal and Piston** , click **Start** and wait until the metering plunger is in maintenance position.

OR: In the Local Controller start the maintenance mode and select **Change Metering Device** function.

2 Open the doors of the module.

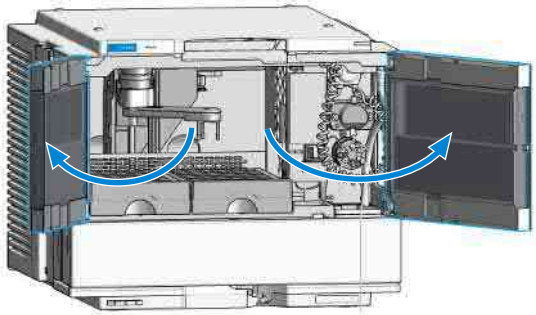

3 Disconnect the two capillaries from the metering device.

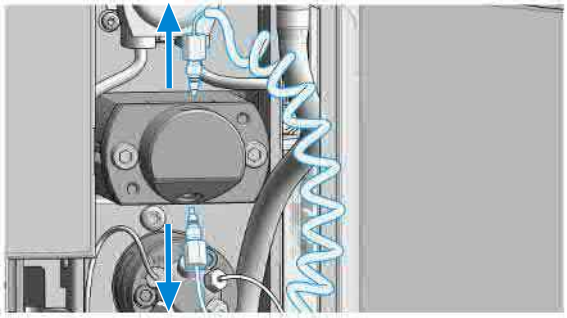

4 Remove the two fixing bolts (4 mm hex).

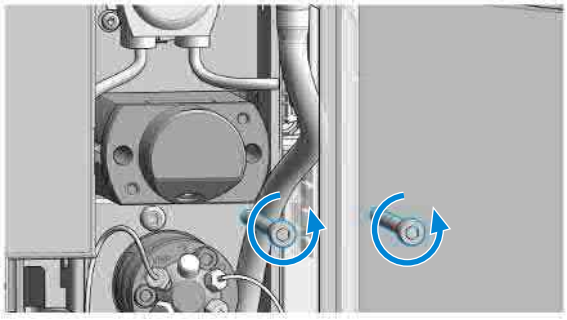

5 Remove the metering head assembly from the sampler.

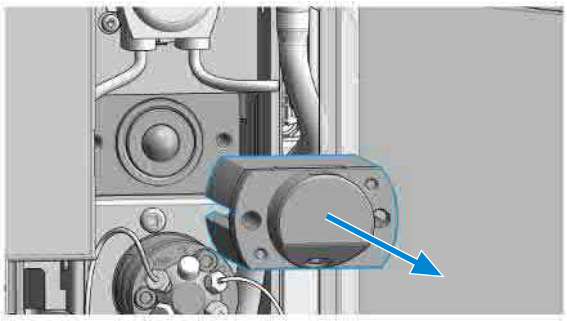

6 Remove the two fixing bolts (3 mm hex) from the base of the metering head assembly.

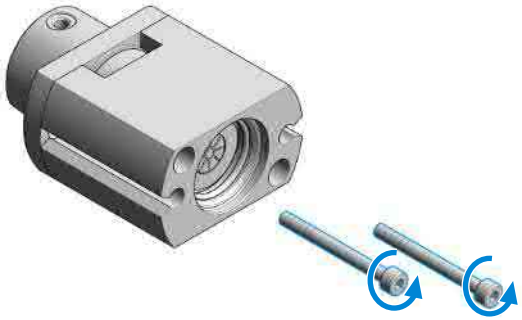

7 Disassemble the metering head assembly (2.5 mm hex).

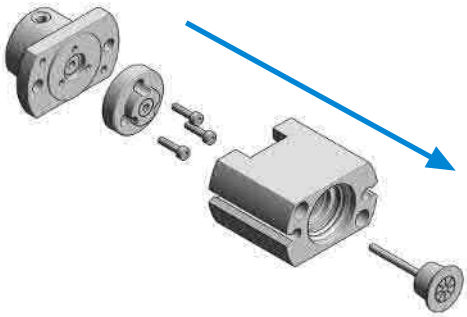

NOTE

The internal construction slightly differs for the 900 µL analytical head, see Analytical Head Assembly (900 µL) on page 356.

8 Use a seal insert tool to carefully remove the seal.

NOTE

Use a pair of tweezers to remove the metering seal in the case of the 40 µL and the 900 µL analytical head.

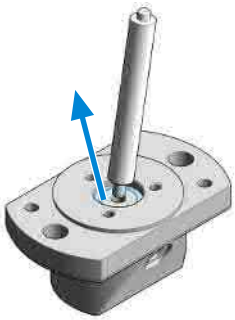

9 Clean the chamber and the plunger with a piece of lint-free cloth and an appropriate solvent, such as isopropanol. Check the plunger for sings of scratches or damage and if necessary, replace it. Ensure that all particulate matter is removed from the chamber.

10 Use the plastic side of the insert tool to install the new seal. Press the seal firmly into position.

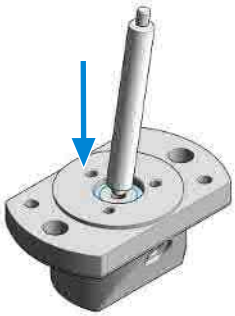

11 Place the seal support ring on top of the seal and fix the screws (2.5 mm hex).

NOTE There are no seal support screws for the 900 µL analytical head.

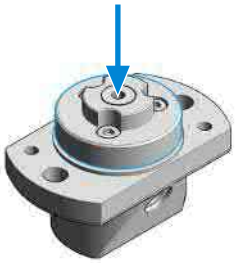

12 Reassemble the metering head assembly. Carefully insert the piston into the base.

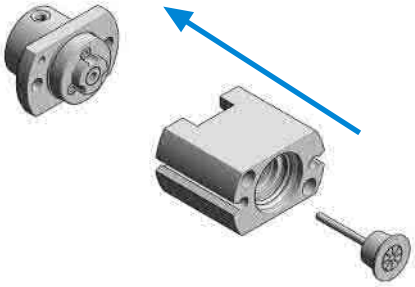

13 Install the fixing bolts (3 mm hex) and tighten them alternately two turns at a time until the stator head is secure. The side without the drain hole must be matching with the capillary port sitting on the non-truncated side of the analytical head.

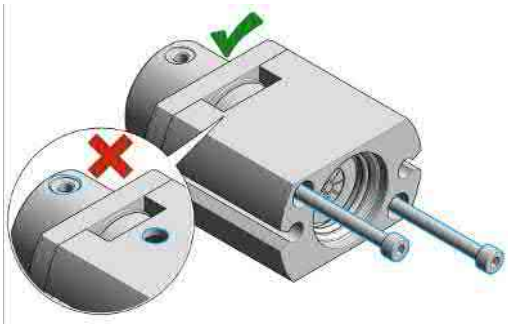

14 Install the metering head assembly in the autosampler. Ensure that the drain hole of the metering body is facing downwards. Tighten the bolts (4 mm hex) alternately two turns at a time until the metering device is secure.

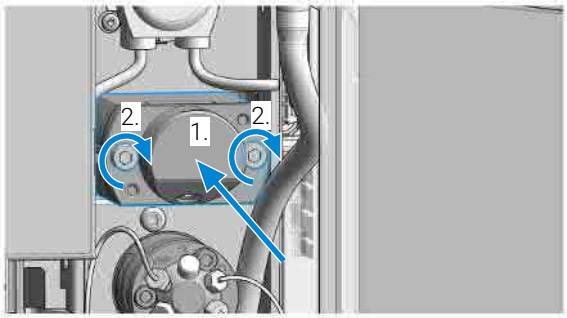

15 Reinstall the capillaries.

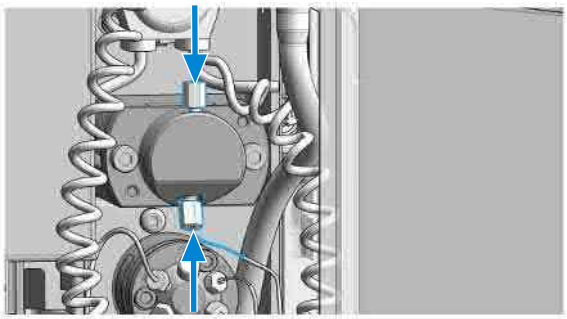

16 In Lab Advisor, select **Next** to move the piston back into its normal position and then **Back** to finish the maintenance procedure.

OR: In the Local Controller, select **Continue** to move the piston back into its normal position and then **Exit** to finish the maintenance procedure.

17 Close the doors.

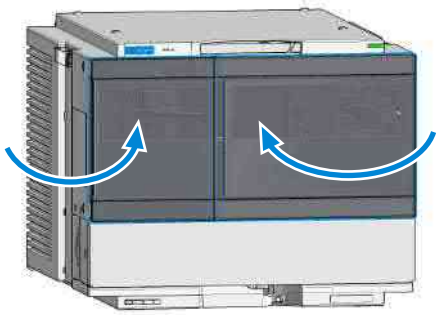

18 Perform a **System Pressure Test**.

Replace the Analytical Head

When

- The maximum injection volume needs to be changed.

Tools required

Qty.	p/n	Description
1	5023-2524	Hex Key Set (part of the G7120-62708 InfinityLab LC Series Tool Kit)

Parts required

Qty.	p/n	Description
1	G7129-60084	Analytical Head Assembly 40 µL **OR**
1	G7129-60082	Analytical Head Assembly 100 µL **OR**
1	G7129-60083	Analytical Head Assembly 900 µL

Preparations

- Finish any pending acquisition job.
- Stop the flow at the pump and remove the solvent lines from the eluent bottles to avoid spilling solvent.
- Close the shutoff valves at the pump if available.

NOTE

If the sampler with 900 µL metering device is linked to a 1260 pump, such as the G7112B Binary Pump, the 400 bar pressure limit must be set manually in the method parameter settings of the pump. See *"Setup of Basic Pump Parameters"* chapter in the pump user manual. For all 1290 pumps, the pressure limit will be set automatically.

NOTE

When the instrument setup has changed, configure the new setup in the online view of the Chromatographic Data System. See Table 18 on page 136.

1. In the Agilent Lab Advisor software, select Service & Diagnostics > Maintenance Positions > Change Metering Seal and Piston , click Start and wait until the metering plunger is in maintenance position.

   OR: In the Local Controller start the maintenance mode and select Change Metering Device function.

2 Open the doors of the module.

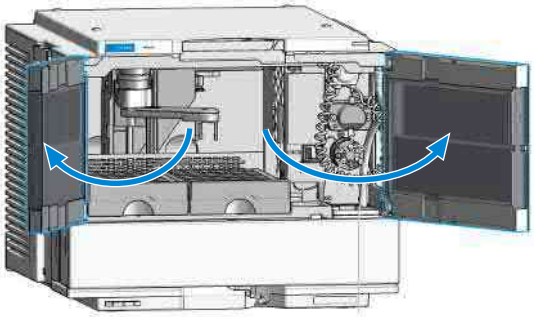

3 Disconnect the two capillaries from the metering device.

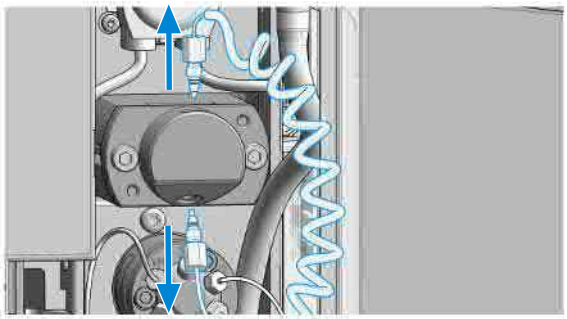

4 Remove the two fixing bolts (4 mm hex).

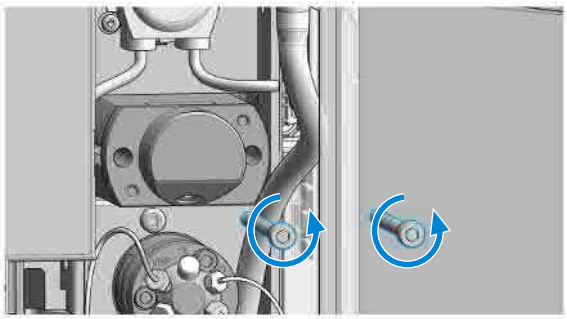

5 Remove the metering head assembly from the sampler.

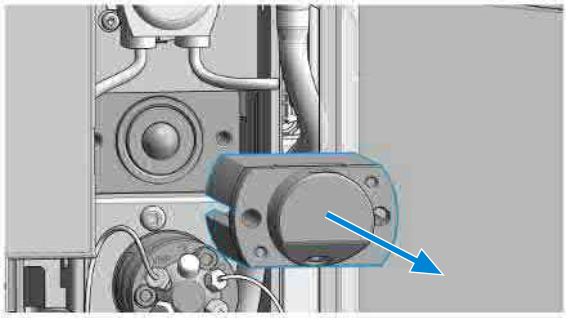

6 Install the metering head assembly in the autosampler. Ensure that the drain hole of the metering body is facing downwards. Tighten the bolts (4 mm hex) alternately two turns at a time until the metering device is secure.

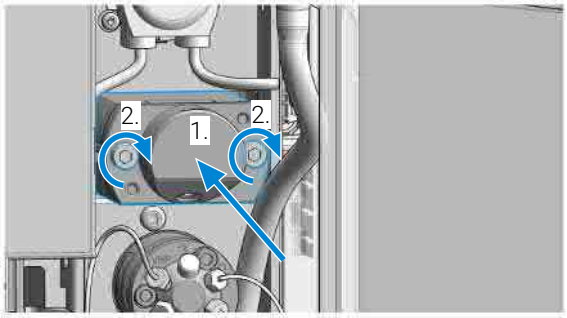

7 Reinstall the capillaries.

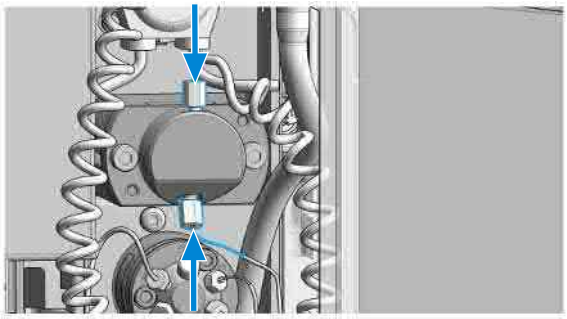

8 In Lab Advisor, select **Next** to move the piston back into its normal position and then **Back** to finish the maintenance procedure.

OR: In the Local Controller, select **Continue** to move the piston back into its normal position and then **Exit** to finish the maintenance procedure.

9 Select **Back** to finish the procedure.

10 Close the doors.

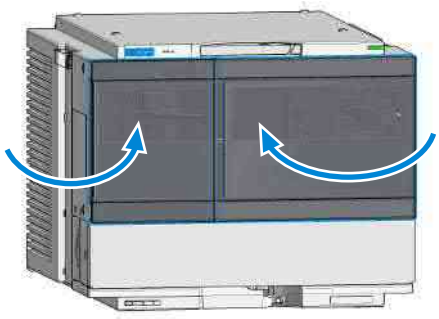

11 Perform a **System Pressure Test**.

12 If needed, install a sample loop matching the volume of the new analytical head, see Exchange the Sample Loop Assembly on page 282.

Exchange the Gripper Arm

When

- The gripper arm needs to be replaced due to malfunctioning.

Tools required

Qty.	p/n	Description
1	5023-2524	Hex Key Set (part of the G7120-68708 InfinityLab LC Series Tool Kit, the 1.5 mm hex key is needed)

Parts required

Qty.	p/n	Description
1	G1313-60010	Gripper assembly

Preparations

- Finish any pending acquisition job

1 In the Agilent Lab Advisor software, select Service & Diagnostics > Maintenance Positions > Change Gripper and wait until the gripper is in maintenance position, see also Maintenance Positions on page 191.

   OR: In the Local Controller start the maintenance mode and select Change Gripper function.

2 Open the doors of the module.

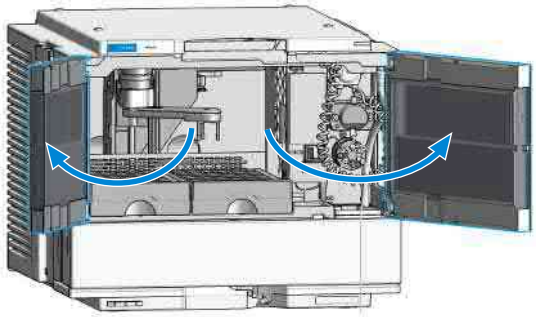

3 Identify the slot for blocking the gripper arm rotation on the left side of the transport arm (1) and the gripper arm release button (2).

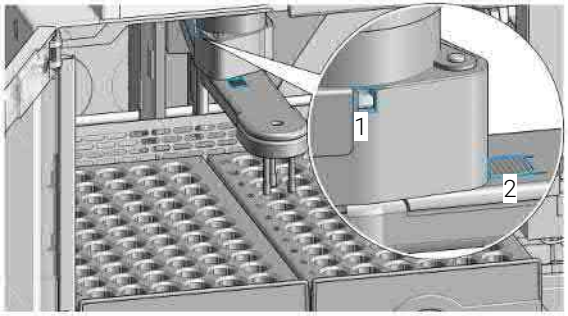

4 Place the hex key (1.5 mm) into the slot and rotate the gripper arm slightly to the left or right until you find the block position.

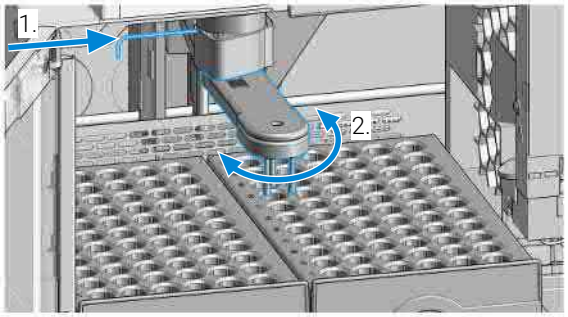

5 Press in the gripper arm release button and carefully rotate the gripper arm approximately 40 – 50 ° to the right, while firmly holding the hex key in place.

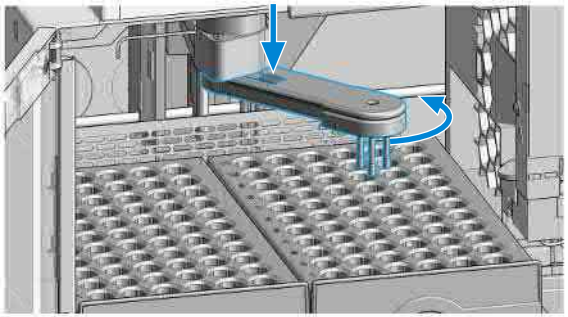

You should feel that the lock mechanism releases the gripper arm.

6 Remove the gripper arm and the hex key.

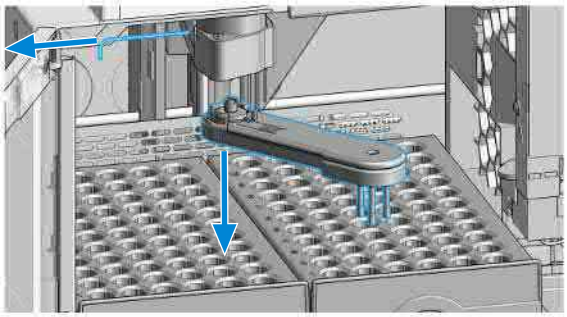

NOTE

With firmware version D.07.28 or older, it is recommended to turn off the sampler to complete the rest of the procedure.

7 Fit the new gripper arm into the socket of the transport arm (1.) and rotate it by 360 ° while firmly holding it against the transport arm (2.) to find the matching position for the lock mechanism.

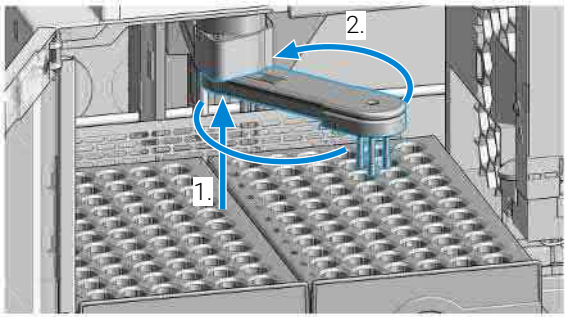

8 Place the hex key back into the slot (1.) and rotate the gripper arm slightly to the left or right until you find the block position (2.).

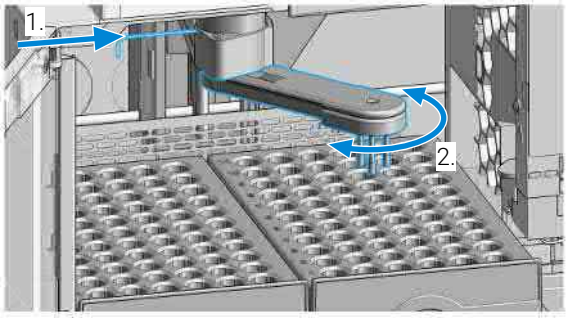

NOTE The gripper arm orientation is slightly different compared to before taking it off.

9 Rotate the gripper arm approximately 40 – 50 ° to the left while firmly holding the hex key in place to snap it into the lock position.

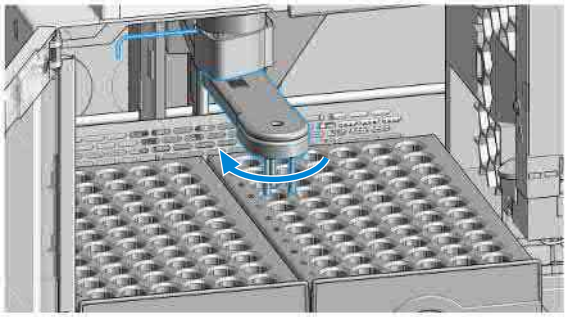

10 Remove the hex key from the block position slot and close the instrument doors.

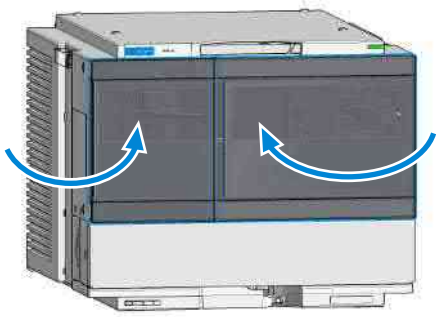

NOTE

With firmware version D.07.28 or older, turn on the sampler and wait until it initializes.

11 Complete the remaining steps prompted in the user interface of the Local Controller or the Agilent Lab Advisor software.

Replace the Finger Caps

When

- The finger caps appear worn or damaged.
- The finger caps need to be replaced as part of the yearly maintenance.

Parts required

Qty.	p/n	Description
1	5063-6506	Finger Caps (15 caps/package)

Preparations

- Finish any pending acquisition job.

1 In the Agilent Lab Advisor software, select Service & Diagnostics > Maintenance Positions > Change Gripper and wait until the gripper is in maintenance position, see also Maintenance Positions on page 191.

OR: In the Local Controller start the maintenance mode and select Change Gripper function.

2 Open the doors of the module.

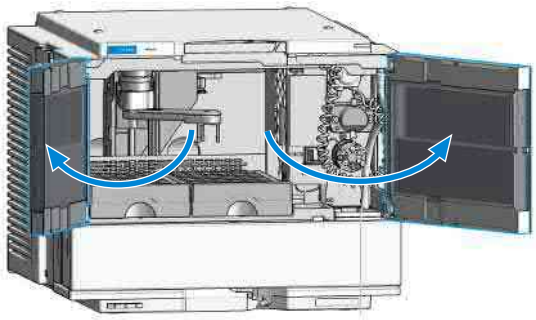

3 Carefully remove the finger caps from the gripper fingers.

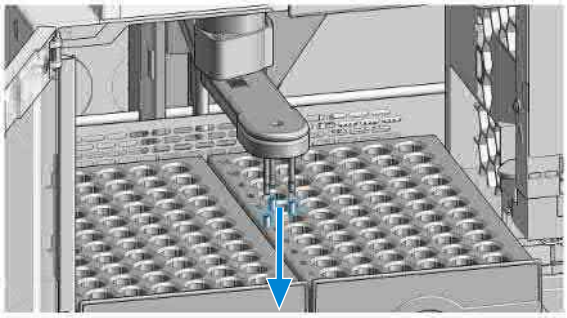

4 Insert the new finger caps onto the gripper fingers. Ensure that they sit firmly in place.

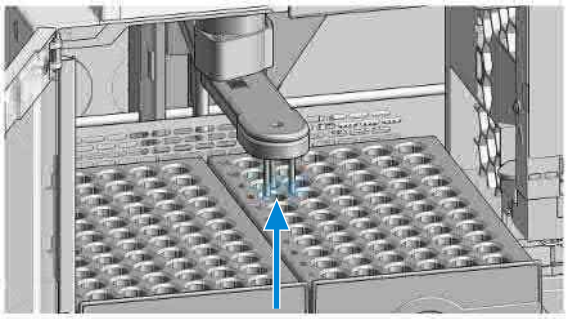

5 Close the doors.

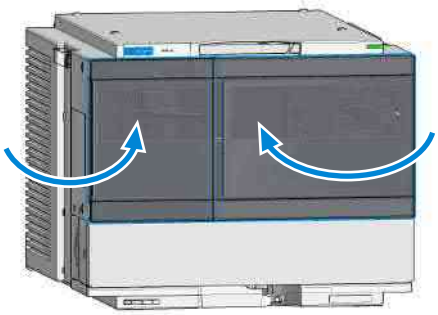

6 Complete the remaining steps prompted in the user interface of the Local Controller or the Agilent Lab Advisor software.

Replace the Peristaltic Pump Cartridge

When

- The tubing is blocked or damaged.
- The peristaltic cartridge needs to be replaced as part of the yearly maintenance.

Parts required

Qty.	p/n	Description
	5065-4445	Peristaltic pump cartridge

Preparations

- Finish any pending acquisition job.
- Remove the solvent line from the wash bottle to avoid spilling solvent.

WARNING

When opening capillary or tube fittings solvents may leak out.

The handling of toxic and hazardous solvents and reagents can hold health risks.

— **Please observe appropriate safety procedures (for example, goggles, safety gloves and protective clothing) as described in the material handling and safety data sheet supplied by the solvent vendor, especially when toxic or hazardous solvents are used.**

NOTE

The peristaltic pump cartridge must be replaced as a single entity. The PharMed tubing is not replaceable separately.

1 Open the doors of the module.

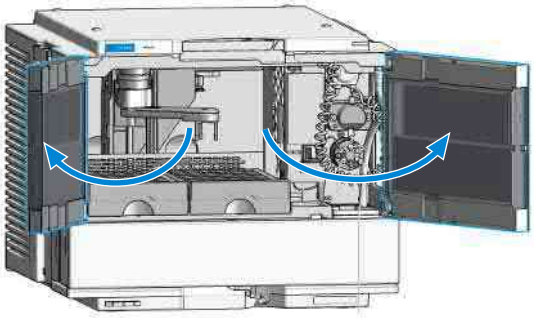

2 Press the two clips on the front of the peristaltic pump cartridge.

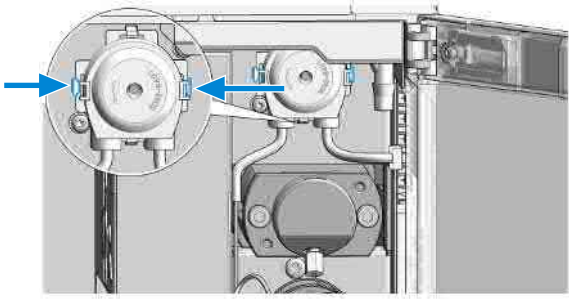

3 Pull the cartridge forward off the motor shaft.

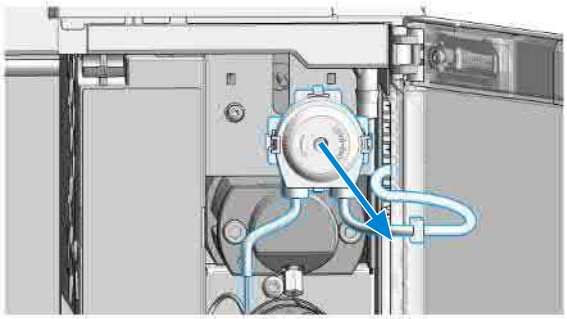

4 Disconnect the tubing leading to the wash port and the tubing coming from the solvent bottle.

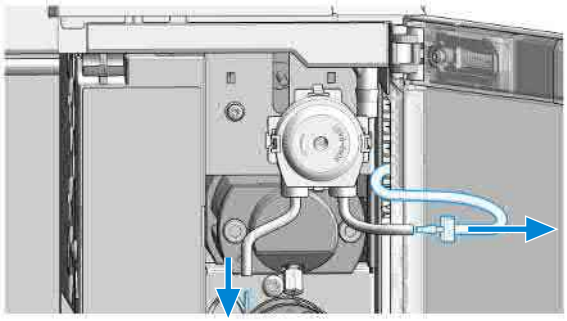

5 Push the new cartridge onto the motor shaft until the clips click into place.

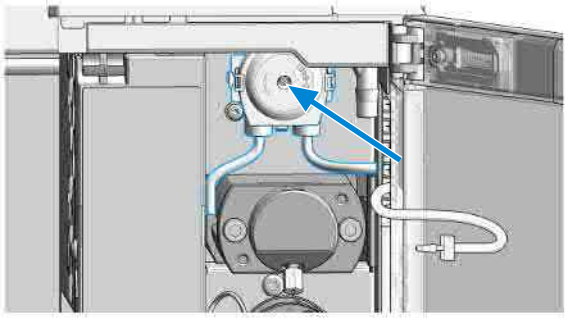

6 Connect the wash port tubing to the left side of the cartridge tubing (use sand paper to get a good grip on the tubing).

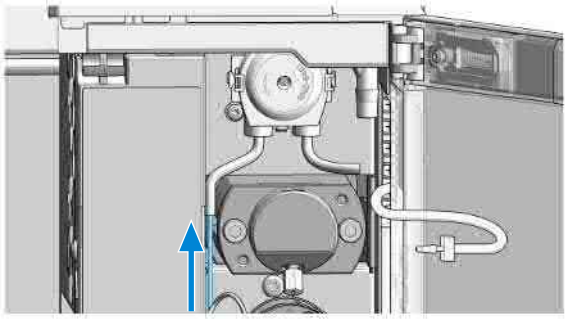

7 Connect the wash solvent line with the plastic fitting to the right side of the cartridge tubing.

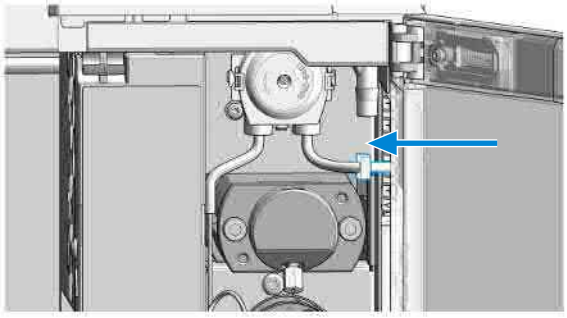

8 Close the doors.

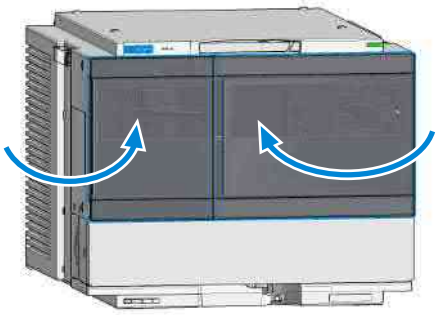

Exchange the Wash Port Assembly

When

- The safety wash port is broken or damaged.
- Carryover problems are observed while needle wash is used.

Tools required

Qty.	p/n	Description
1	5182-3466	Torx screwdriver T10
		OR
1	5023-3089	Torx key set (part of the G7120-68708 InfinityLab LC Series Tool Kit)

Parts required

Qty.	p/n	Description
1	G7129-60033	Safety Wash Port for Needle Station

Preparations

- Finish any pending acquisition job.
- Stop the flow at the pump and remove the solvent lines from the eluent bottles to avoid spilling solvent.
- Close the shutoff valves at the pump if available.

1 In the Agilent Lab Advisor software select **Service & Diagnostics** > **Maintenance Positions** > **Change Needle, Loop and Seat** , click **Start** and wait until the needle assembly is in maintenance position.

OR: In the Local Controller start the maintenance mode and select **Change Needle, Loop and Seat** function.

2 Open the doors of the module.

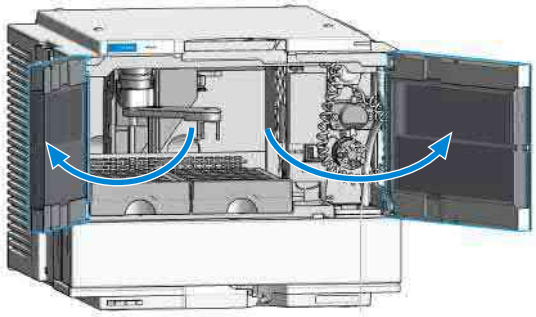

3 Verify that the needle in the uppermost position before continuing.

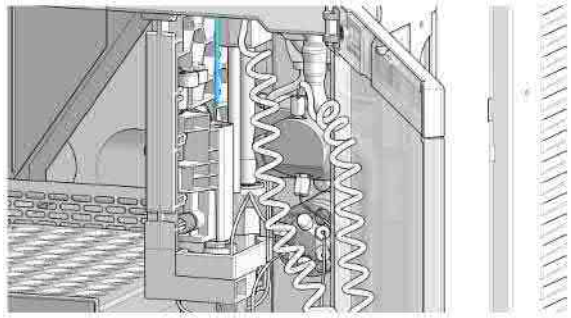

4 Loosen the safety cover screw.

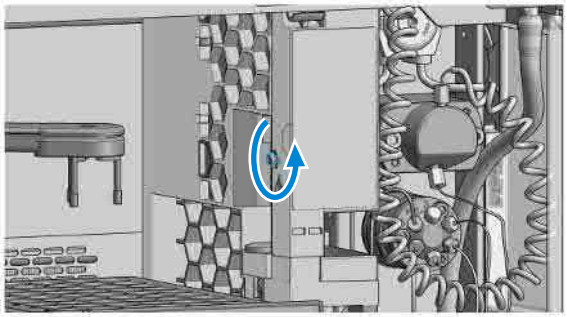

WARNING

Sharp needle

Uncovered needles may cause injuries

— **Do not touch the tip of the needle.**

5 Remove the safety cover.

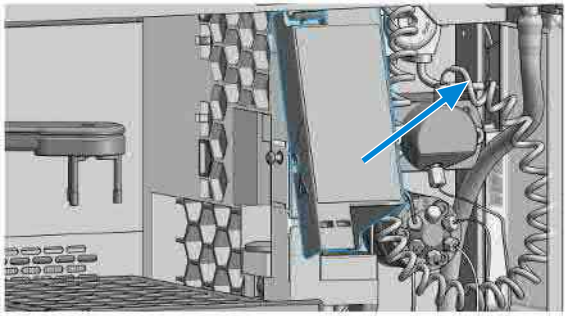

WARNING

Sharp needle

Uncovered needles may cause injuries.

- **Do not change the needle seat at this point.**
- **Do not touch the tip of the needle.**

6 Move the wash port into the service position by slightly lifting it up and then flapping to the left.

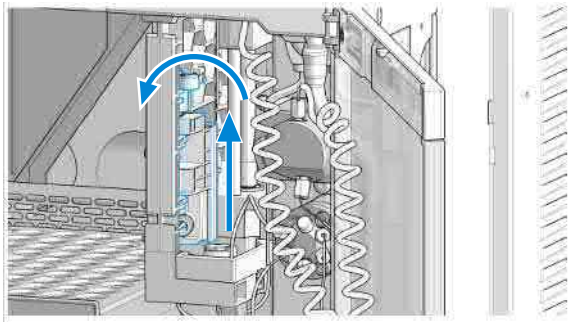

7 In Lab Advisor use **Next** to move the needle in the down position (ca. 2 mm above the seat).

OR: In the Local Controller, move the needle down until the needle tip is ca. 2 – 4 mm above the seat.

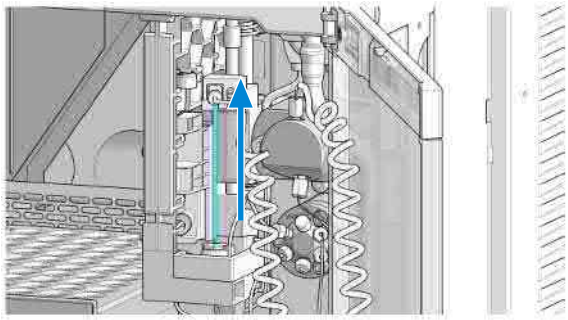

8 Disconnect the sample loop from the needle, and, if needed, also from the metering device.

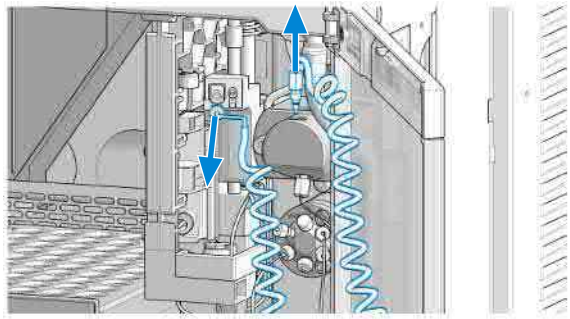

9 Loosen the fixing screw.

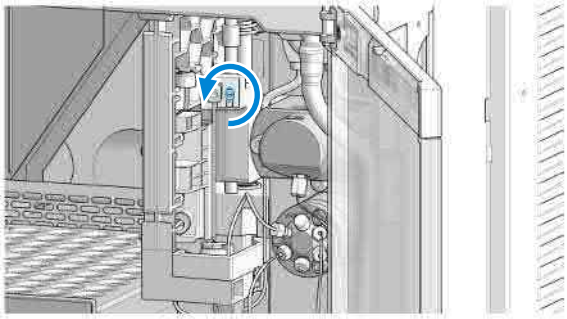

10 Lift out the needle.

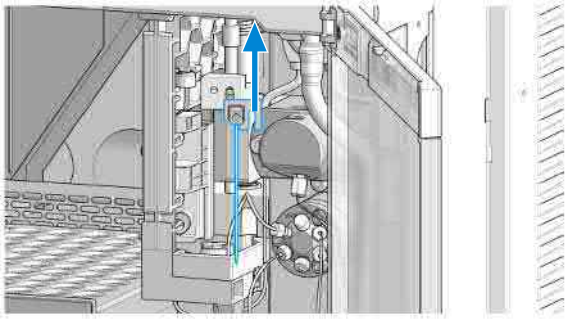

11 Release the spring loaded pin.

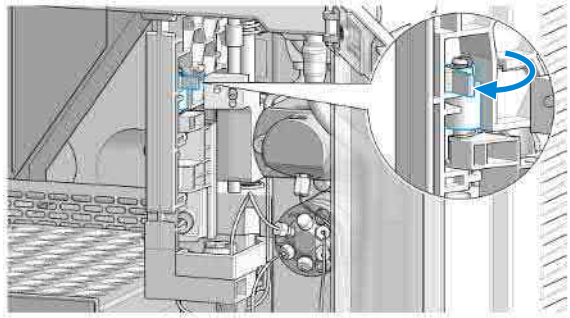

12 Flap the wash port to the right and lift it out of the bracket. Be careful not to squeeze the wash tubing.

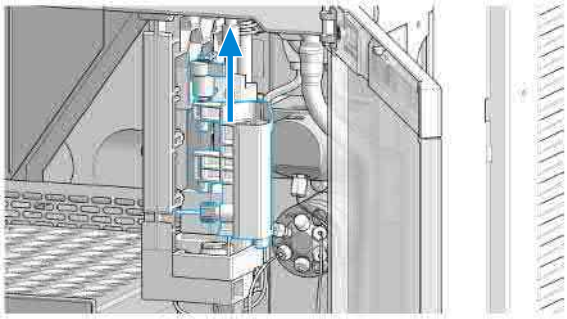

NOTE

Move the needle holder arm up by a couple of mm if you are facing difficulties with moving the wash port to the right.

13 Disconnect the wash tube fitting and then move the old wash port completely out of the sampler.

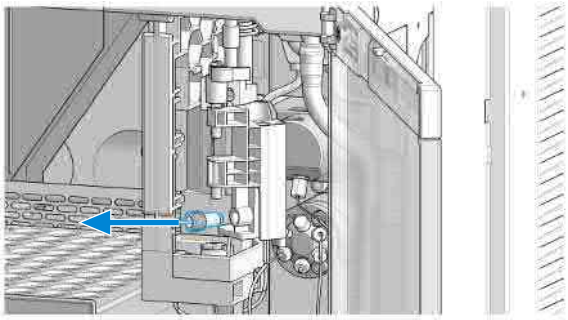

14 Connect the wash tubing fitting to the new wash port assembly.

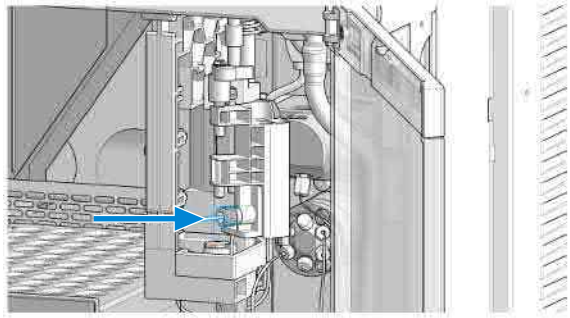

15 Install the new wash port by mounting it in the respective brackets of the needle station housing. The pin must be latched on the housing. Check the movement of the flapping mechanism. Check if the tension on the spring is high enough to move the wash port back into position in time. When everything seems to be in order, move the wash port into the service position (see step 6).

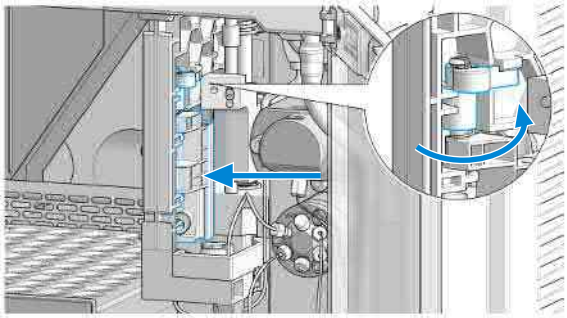

16 Mount and align the needle on its fixture, then tighten the screw firmly.

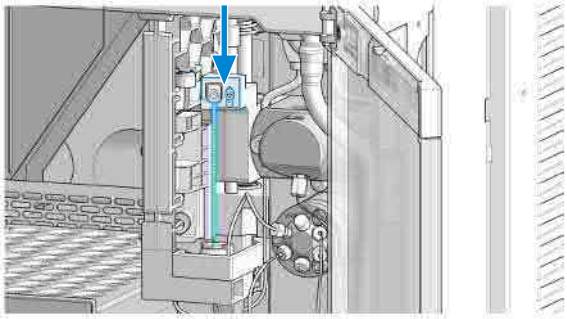

17 Align the needle tip with the seat and ensure that they are concentric. If needed, carefully bend the needle into the right position with your fingers.

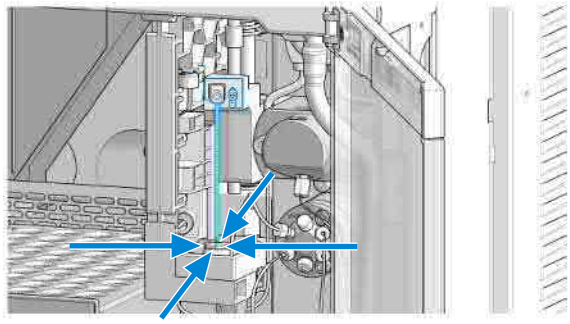

18 Reconnect the sample loop to the needle. Make sure of the correct positioning of the loop capillary, the uncoated part of the capillary must be horizontal.

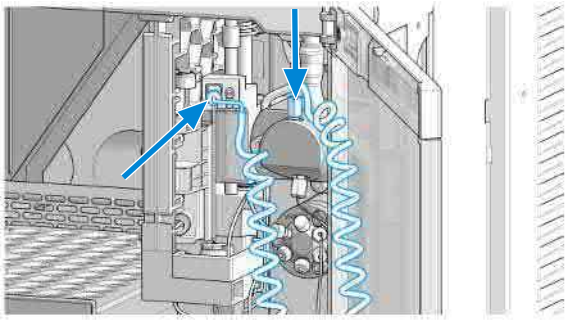

NOTE Do not overtighten the fitting!

NOTE Incorrect positioning and installation of the needle/loop connection can result in damaging or breaking the sample loop.

19 In Lab Advisor use **Next** to lift the needle slowly into the up position.

OR: In the Local Controller, move the needle up to the uppermost position.

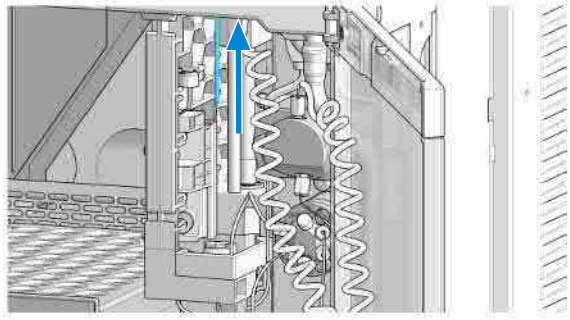

20 Move the wash port back into its normal position by turning it to the right.

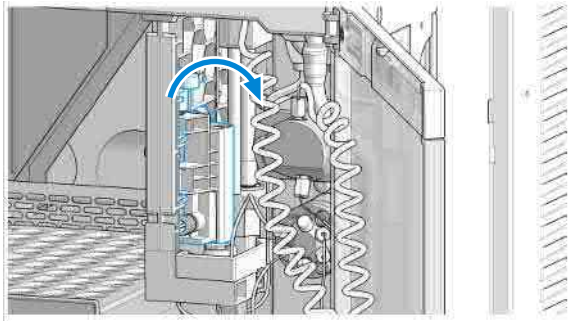

21 Install the safety cover (1.) and fix the screw (2.).

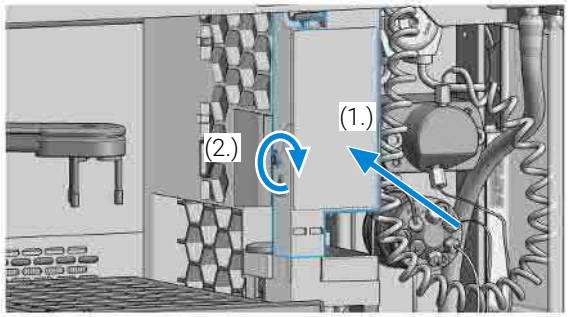

22 In Lab Advisor, select **Next** to move the needle into the needle seat and then **Back** to finish the maintenance procedure.

OR: In the Local Controller, select **Continue** to move the needle into the needle seat and then **Exit** to finish the maintenance procedure.

23 Select **Back** to finish the procedure.

24 Close the doors.

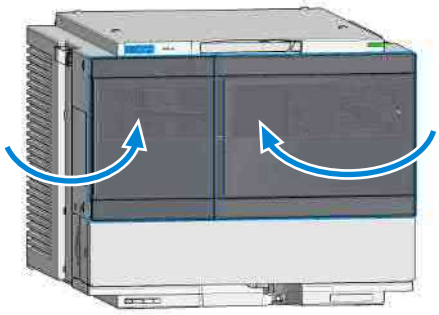

25 Purge the wash port. Check if solvent is delivered from the peristaltic pump.

26 Perform a **System Pressure Test**.

Replace the Module Firmware

When

Install a newer firmware

- It fixes known problems of older versions, or
- It introduces new features, or
- It ensures keeping all systems at the same (validated) revision

When

Install an older firmware

- It ensures keeping all systems at the same (validated) revision, or
- It ensures compatibility after adding a new module to the system, or
- A third-party control software requires a special version

Software required

- Agilent Lab Advisor software

Tools required

Qty.	p/n	Description
1		Firmware, tools and documentation from Agilent web site

Preparations

- Read update documentation provided with the Firmware Update Tool.

To upgrade/downgrade the module's firmware carry out the following steps:

1. Download the required module firmware, the latest FW Update Tool and the documentation from the Agilent web.
   https://www.agilent.com/en-us/firmwareDownload?whid=69761
2. For loading the firmware into the module follow the instructions in the documentation.

Module Specific Information

There is no specific information for this module.

Replace the Sample Thermostat

When

- The Sample Thermostat is damaged or defective.

Tools required

Qty.	p/n	Description
1	5182-3466	Torx screwdriver T10 (for the Sample Thermostat) **OR**
1	5023-3089	Torx key set (part of the G7120-68708 InfinityLab LC Series Tool Kit)

Parts required

Qty.	p/n	Description
1	G7167-60201	Sample Thermostat

Preparations

- If needed, update the firmware of the hosting sampler to ensure that it supports the type of thermostat you are about to install, see Specifications of the Sample Thermostat on page 37.

WARNING **Flammable refrigerant**

Formation of flammable gas-air mixtures inside the Sample Thermostat and laboratory.

- **Keep open fire or sources of ignition away from the device.**
- **Ensure a room size of 4 m^3 (1 m^3 for every 8 g of R600a refrigerant inside of the Sample Thermostat).**
- **Ensure adequate ventilation: typical air exchange of 25 m^3/h per m^2 of laboratory floor area.**
- **Keep all ventilation openings in the enclosure clear of obstructions. Do not block the openings on the circumference of the Sample Thermostat.**

WARNING **Flammable refrigerant used**

- **When handling, installing and operating the Sample Thermostat, care should be taken to avoid damage to the refrigerant tubing or any part of the Sample Thermostat.**

WARNING

In the event of a damage

- **Keep open fire or sources of ignition away from the device.**
- **Ventilate the room for several minutes.**
- **Do not use the Sample Thermostat any more.**

WARNING

Heavy weight

The module is heavy.

- **Carry the module at least with 2 people.**
- **Avoid back strain or injury by following all precautions for lifting heavy objects.**
- **Ensure that the load is as close to your body as possible.**
- **Ensure that you can cope with the weight of your load.**

CAUTION

Routing of the condensation tubing

Proper routing of the condensation tubing is critical for correct condensate drainage.

- Do not place the sampler directly on the bench.

CAUTION

Condensate inside the module

Damage to the electronics of the module

- After installation of the Sample Thermostat, wait at least 30 min before switching on the module.
- Make sure there is no condensate inside the module.

1 Ensure that the power switch on the front of the module is OFF (switch stands out).

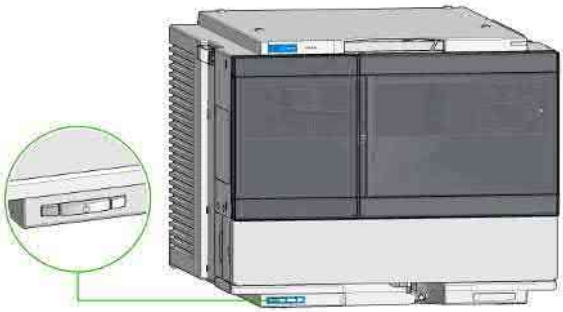

2 Disconnect the power cable from the sampler.

3 Ensure that no condensate remains inside the thermostat before proceeding forward.

NOTE Gently tapping on the sides of the sampler can help to remove the last traces of condensate from the system.

4 Loosen the screw (1) and remove the condensate funnel (2) from the back of the thermostat.

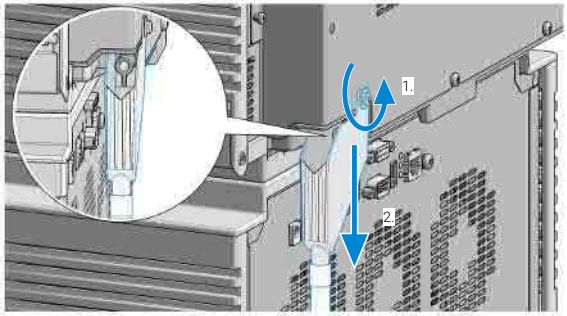

NOTE

If there is still some condensate inside the thermostat, place a suitable container underneath the outlet tube, and keep tapping on the sides of the sampler until no more water comes out.

5 Remove the fixation screws on the back of Sample Thermostat.

6 Pull the thermostat halfway out, disconnect the power and the data cable and then remove the unit completely from the sampler.

7 Slide the new thermostat halfway into the sampler and connect the power and the data cable.

CAUTION

Damage to the cables

- Do not bend or pinch the cables.
- Make sure that the Sample Thermostat fits perfectly in the sampler.

8 Slide the Sample Thermostat all the way into the sampler.

9 Fix the unit with the four screws.

10 Position the condensate collector funnel underneath the condensate drainage outlet tube (1) and fix it to the back of the thermostat by tightening the screw (2). Ensure correct orientation and avoid overtightening the screw.

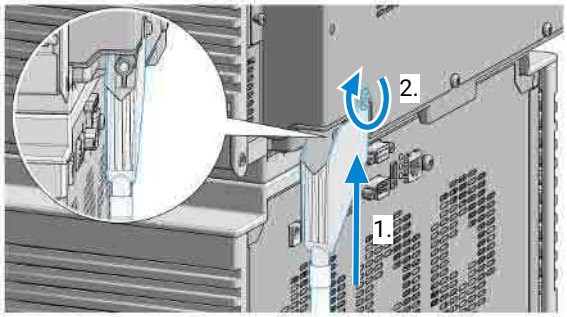

NOTE

For information on proper condensate handling, see Install the Sample Thermostat on page 77.

11 Connect the power cable to the power connector at the rear of the module.

CAUTION

Damage to the Sample Thermostat

- Wait at least 30 min before switching on the compressor of the thermostat.
- This allows the refrigerant and system lubrication to reach equilibrium.

12 Switch on the sampler and perform the **Sample Cooler Function Test** to verify the correct functioning of the new thermostat, see Sample Cooler Function Test on page 199.

9 Parts and Materials for Maintenance

This chapter provides information on parts for maintenance.

Standard Parts for Maintenance 335
PM Kits 335
Needle Assemblies 335
Needle Seats 335
Sample Loops 336
Rotor Seals for Injection Valves 336
Metering Seals for Analytical Heads 336
Capillary Connections 337
Other Parts 337

Accessory Kits 339
Accessory Kit for 1290 Vialsampler 339
Accessory Kit for 1260 Vialsampler 340

Vial Drawers and Trays 342
Cartesian Vial Drawers 342
Classic Vial Drawers 343
External Tray 344

Multidraw Kits 345
Multidraw Kit 345
Large Volume Injection Kit 345

Sample Thermostat Upgrade Kit 346

Integrated Column Compartment 347

Column ID Upgrade Kit 348

Parts for 900 µL Injection Upgrade 349

Cabinet and Door Kits 350
Cabinet Kit 350

Infinity III Door Kit 352
Infinity II Door Kit 353
Door Insulation Kit for Infinity II Doors 354

Analytical Head Assembly (100 µL) 355

Analytical Head Assembly (900 µL) 356

Analytical Head Assembly (40 µL) 357

2 Position/6 Port Injection Valve, 600 bar 358

2 Position/6 Port Injection Valve, 800 bar 359

2 Position/6 Port Injection Valve, 1300 bar 360

Standard Parts for Maintenance

PM Kits

p/n	Description
G7129-68740	Preventive Maintenance Kit for 1260 Vialsampler (includes needle, seat assembly, peristaltic pump cartridge, PEEK rotor seal, 100 µL metering seal, and finger caps)
G7129-68730	Preventive Maintenance Kit for 1290 Vialsampler (includes needle, seat assembly, peristaltic pump cartridge, Vespel rotor seal, 40 µL metering seal, and finger caps)

Needle Assemblies

p/n	Description
G7129-87200	Needle assembly, 1260 Vialsampler (for G7129-87017 needle seat)
G7129-87201	Needle assembly, 1290 Vialsampler (for G7129-87012 needle seat)
G7129-87202	Needle assembly, slotted, 1260 Vialsampler (for high injection volumes)

Needle Seats

p/n	Description
G7129-87017	Seat Assembly, PEEK, 0.17 mm, 1260 Vialsampler
G7129-87012	Seat Assembly, PEEK, 0.12 mm, 1290 Vialsampler
G7129-87117	Seat Assembly, Vespel, 0.17 mm, 1260 Vialsampler
G7129-87112	Seat Assembly, Vespel, 0.12 mm, 1290 Vialsampler

NOTE The use of a Vespel needle seat (G7129-87112 and G7129-87117) limits the maximum system pressure to 600 bar.

Sample Loops

p/n	Description
G7129-60500	Sample Loop, ST, 100 µL, 1260 Vialsampler (white coded)
G7129-60400	Sample Loop, ST, 40 µL, 1290 Vialsampler (green coded)
G7129-60300	Sample Loop, ST, 20 µL, 1290 Vialsampler (red coded)

Rotor Seals for Injection Valves

p/n	Description
0101-1416	Rotor Seal, PEEK, 600/800 bar
5068-0007	Rotor Seal, Vespel, 1300 bar

Metering Seals for Analytical Heads

p/n	Description
0905-1503	Metering Seal, 100 µL
0905-1717	Metering Seal, 40 µL
0905-1294	Metering Seal, 900 µL

Capillary Connections

p/n	Description
5500-1246	Capillary ST 0.17 mm x 500 mm SI/SI (pump to Vialsampler without ICC)
5500-1217	Capillary, ST, 0.17 mm x 900 mm SI/SX (pump to Vialsampler with ICC)
5500-1252	Capillary, ST, 0.17 mm x 400 mm SL/SL (1260 Vialsampler to MCT)
5500-1240	Capillary ST 0.17 mm x 105 mm SL/SL (ICC, 6 µL to column)
5500-1251	Capillary ST 0.12 mm x 400 mm SL/SL (1290 Vialsampler to MCT)
5500-1238	Capillary ST 0.12 mm x 105 mm SL/SL (ICC, 3 µL to column)
5500-1250	Capillary, ST, 0.17 mm x 120 mm SL/SL, long socket (1260 Vialsampler to ICC, 6 µL)
5500-1249	Capillary ST 0.12 mm x 120 mm SL/SL, long socket (1290 Vialsampler to ICC, 3 µL)
5067-5966	InfinityLab Quick Turn Fitting
5067-6166	InfinityLab Quick Connect Assy ST 0.17 mm x 105 mm (alternative, ICC, 6 µL to column)
5067-5957	InfinityLab Quick Connect Assy ST 0.12 mm x 105 mm (alternative, ICC, 3 µL to column)
5500-1228	Capillary ST 0.3 mm x 80 mm SL-SL (metering head to injection valve)

Other Parts

p/n	Description
G1313-60010	Gripper assembly
5063-6506	Finger Caps
5065-4445	Peristaltic pump cartridge
1460-2763	Compression Spring ST for Peristaltic Pump

p/n	Description
5042-9903	Plastic Fitting for Peristaltic Pump (10/pack)

Accessory Kits

Accessory Kit for 1290 Vialsampler

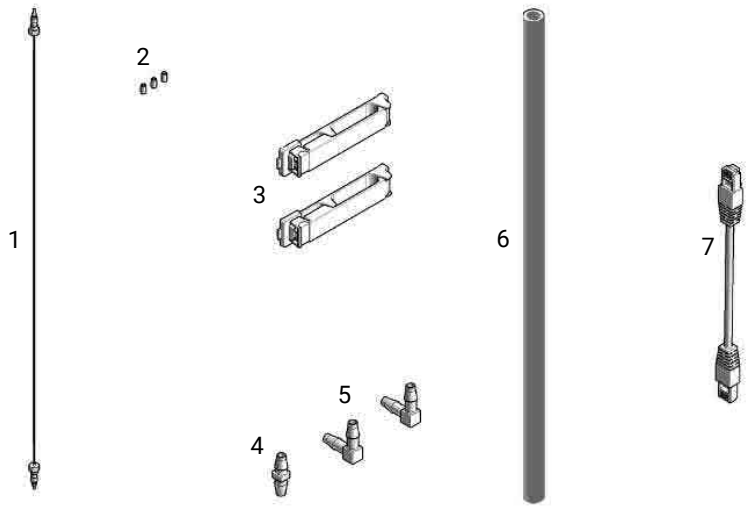

Figure 34: Accessory Kit for Vialsamplers

#	Qty.	p/n	Description
	1	G7129-68705	Accessory Kit for 1290 Vialsampler contains:
1	1	5500-1251	Capillary ST 0.12 mm x 400 mm SL/SL
2	3	5063-6506	Finger Caps (15/pk, if ordered separately)
3	2	5043-1013	Tubing Clip
4	1	5500-1411	Tubing Connector, 180, ID 6.4 mm (5/pk, if ordered separately)
5	2	5500-1223	Tubing Connector, 90°, ID 6.4 mm (5/pk, if ordered separately)
6	1	5063-6527	Tubing, Silicon Rubber, 1.2 m, ID/OD 6 mm/9 mm

#	Qty.	p/n	Description
7	1	5181-1519	CAN cable, Agilent module to module, 1 m
	1	5182-0716	Screw Cap Vial, 2 ml, amber glass, write-on spot, 100/Pack (not shown)
	1	5190-7024	Screw Cap, PTFE/silicone, 100/pk (not shown)

Accessory Kit for 1260 Vialsampler

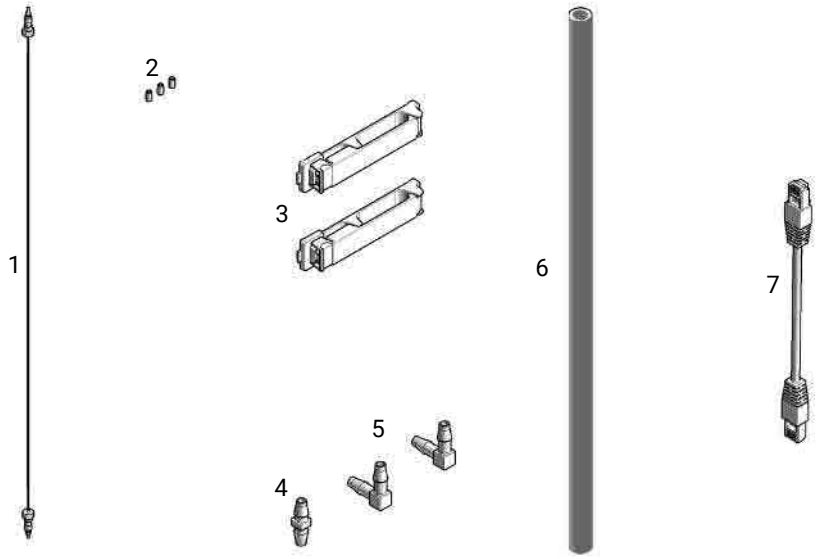

Figure 35: Accessory Kit for Vialsamplers

#	Qty.	p/n	Description
	1	G7129-68715	Accessory Kit for 1260 Vialsampler contains:
1	1	5500-1252	Capillary, ST, 0.17 mm x 400 mm SL/SL
2	3	5063-6506	Finger Caps (15/pk, if ordered separately)

#	Qty.	p/n	Description
3	2	5043-1013	Tubing Clip
4	1	5500-1411	Tubing Connector, 180, ID 6.4 mm (5/pk, if ordered separately)
5	2	5500-1223	Tubing Connector, 90°, ID 6.4 mm (5/pk, if ordered separately)
6	1	5063-6527	Tubing, Silicon Rubber, 1.2 m, ID/OD 6 mm/9 mm
7	1	5181-1519	CAN cable, Agilent module to module, 1 m
	1	5182-0716	Screw Cap Vial, 2 ml, amber glass, write-on spot, 100/Pack (not shown)
	1	5190-7024	Screw Cap, PTFE/silicone, 100/pk (not shown)

Vial Drawers and Trays

Cartesian Vial Drawers

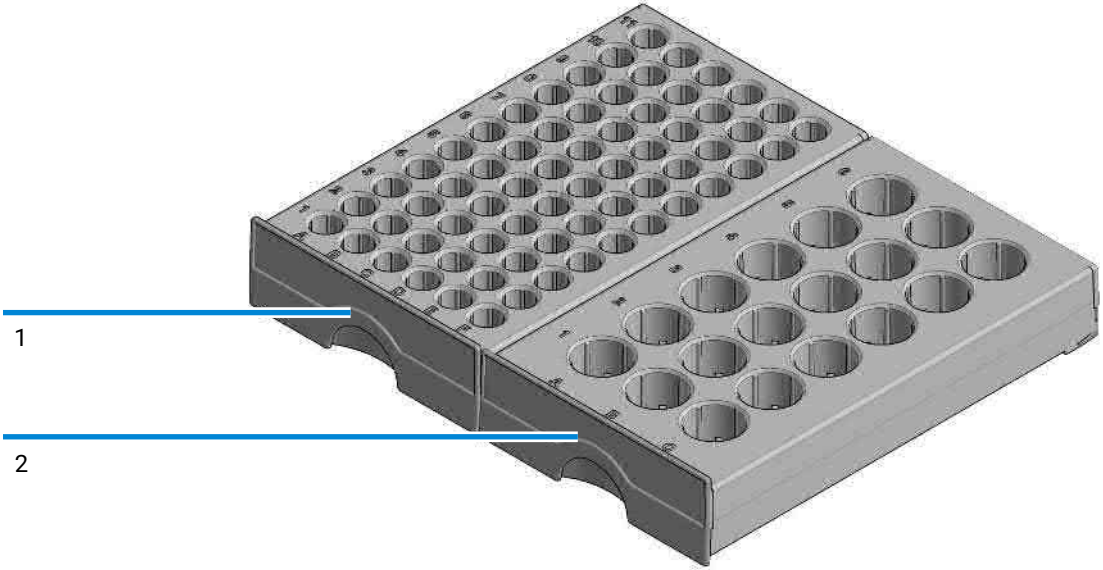

Figure 36: Cartesian Vial Drawers

#	p/n	Description
1	G7129-60010	Drawer for 66 x 2 mL Vials
2	G7129-60110	Drawer for 18 x 6 mL Vials

NOTE Do not use cartesian vial drawers in combination with classic vial drawers.

Classic Vial Drawers

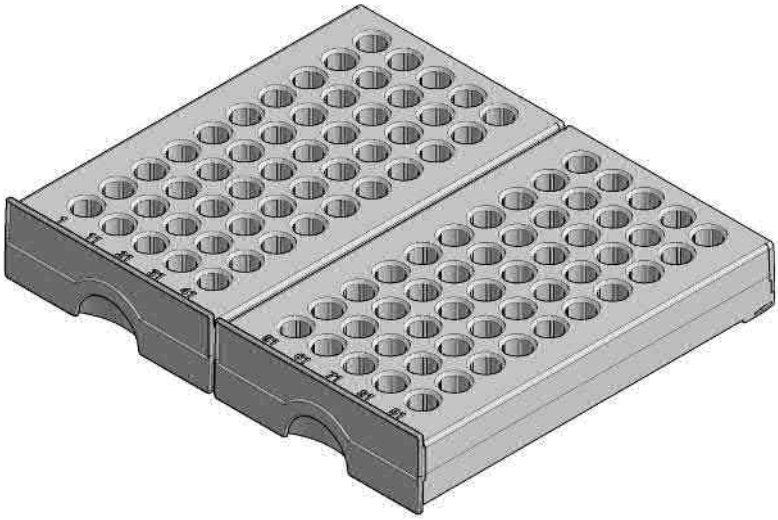

Figure 37: Classic Vial Drawer Kit

p/n	Description
G7129-68210	Classic Vial Drawer Kit (a set of left and right drawers)

NOTE Do not use classic vial drawers in combination with cartesian vial drawers.

NOTE Ensure the correct position of the left (vials 1 – 50) and the right (vials 51 – 100) drawer of the Classic Vial Drawer Kit.

External Tray

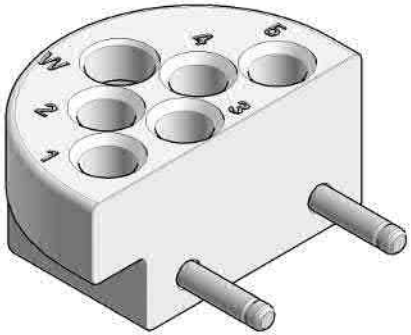

Figure 38: External tray

	p/n	Description
	G7129-60000	External Tray for 5 x 2 mL Vials
	G1313-27302	Disposal tube (not shown)

Multidraw Kits

Multidraw Kit

p/n	Description
G7167-68711	Multidraw Kit for 1260 Autosamplers contains:
G1313-87307	Seat Capillary, ST, 500 µL, ID 0.5 mm
G1313-87308	Seat Capillary, ST, 1500 µL, ID 0.94 mm
0100-0900	Zero Dead Volume Union, ST

NOTE With the Multidraw Kit, the maximum injection volume can be extended to 500 or 1500 µL for the 100 µL analytical head and to 1800 µL for the 900 µL analytical head. The nominal volume of the seat capillaries is 656 and 2415 µL, respectively.

Large Volume Injection Kit

p/n	Description
G4216-68711	Large Volume Injection Kit for 1290 Autosamplers contains: Extension Seat Capillary, 80 µL, 0.5 mm ID (0.9 mm OD)

NOTE With the Large Volume Injection Kit, the maximum injection volume can be extended to 100 or 120 µL, depending on the sample loop installed in the system. The nominal volume of the seat capillary is 157 µL.

Sample Thermostat Upgrade Kit

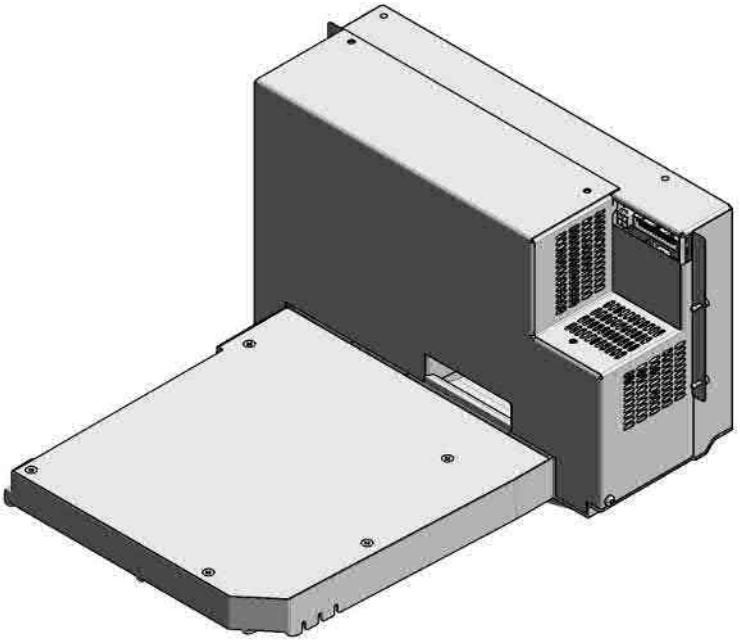

Figure 39: Sample Thermostat

p/n	Description
G4761A	InfinityLab Sample Thermostat Upgrade Kit contains:
G7167-60201	Sample Thermostat
5067-6208	Condensate Drainage Kit (not shown)

NOTE The Sample Thermostat contains flammable refrigerant R600a. Please check further details for installation.

Integrated Column Compartment

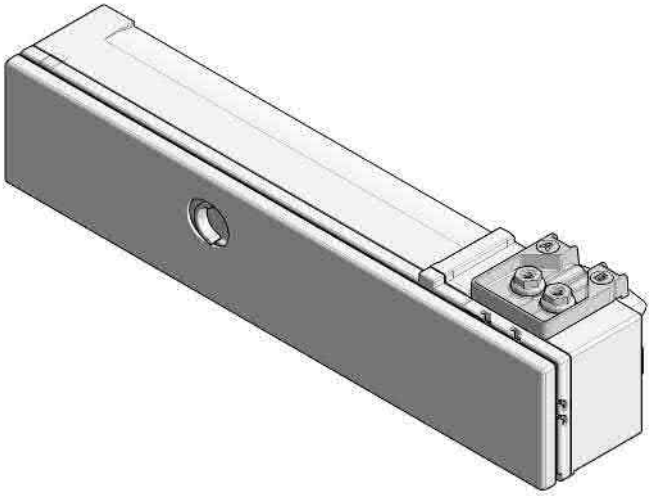

Figure 40: Integrated Column Compartment

p/n	Description
G7130-60030	Integrated Column Compartment
G7130-60060	Integrated Column Compartment
G7116-68003	Column Holder Lamella, 2/pk (not shown)

NOTE

The Integrated Column Compartment is always shipped with an accessory kit, including a pair of column-holder lamellas and two stainless steel capillaries (ID 0.12 mm or 0.17 mm) with a length of 105 mm and 120 mm, respectively (see Capillary Connections on page 337).

Column ID Upgrade Kit

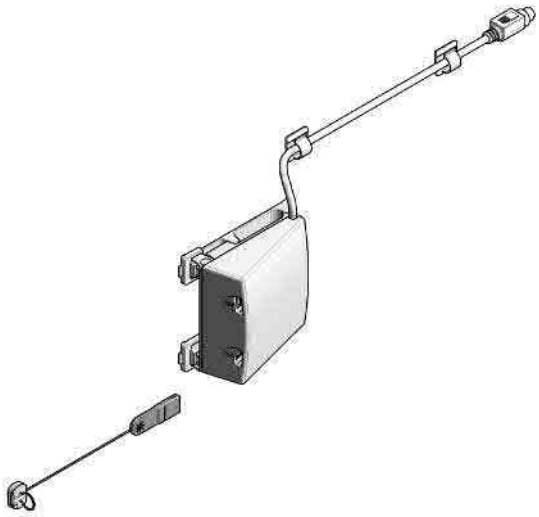

Figure 41: Column Identifier Kit

p/n	Description
G4751A	Column ID Upgrade Kit for the Integrated Column Compartment contains:
5067-6153	Column ID Tag Reader
5067-5917	InfinityLab Column Identification Tag

NOTE The InfinityLab Column Identification Tags used in G7116A/B and G7129A/B/C are not compatible with the former Column Identification Tags used in G1316x.

NOTE The Column Identifier Kit can only be used in combination with the Integrated Column Compartment (ICC).

Parts for 900 µL Injection Upgrade

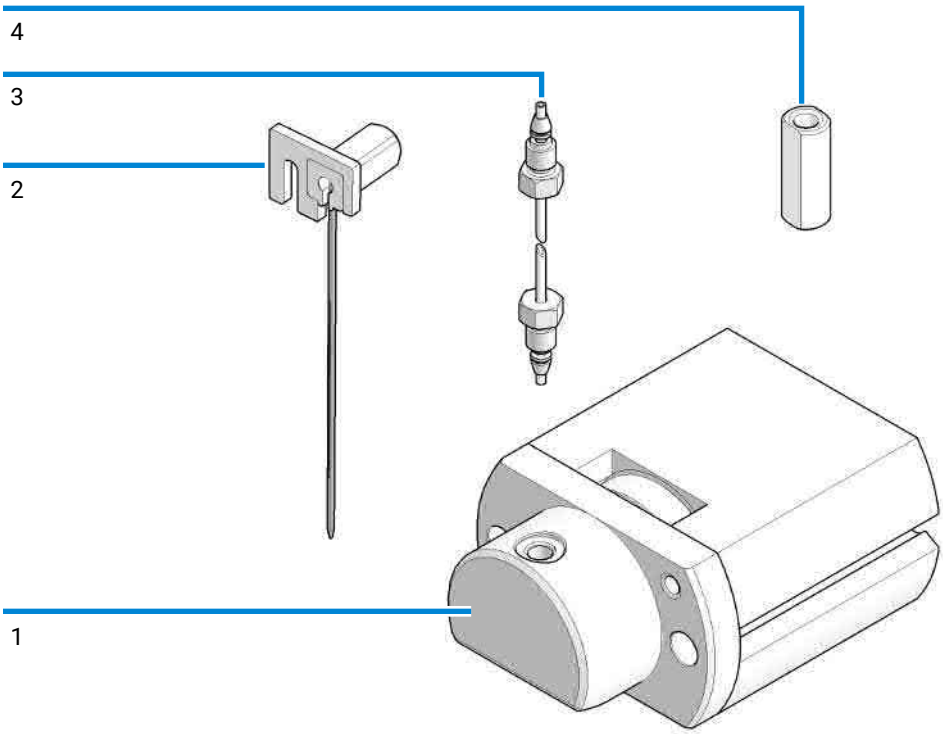

#		p/n	Description
1		G7129-60083	Analytical Head Assembly 900 µL
2		G7129-87202	Needle assembly, slotted, 1260 Vialsampler (for high injection volumes)
3		G1313-87303	Capillary ST 0.17 mm x 400 mm S/S (Loop extension capillary (900 µL))
4		5022-2133	High Flow union, ST, no fitting

NOTE With the 900 µL analytical head, the maximum system pressure is limited to 400 bar.

Cabinet and Door Kits

Cabinet Kit

NOTE The top cover and the two side covers are not separately operable.

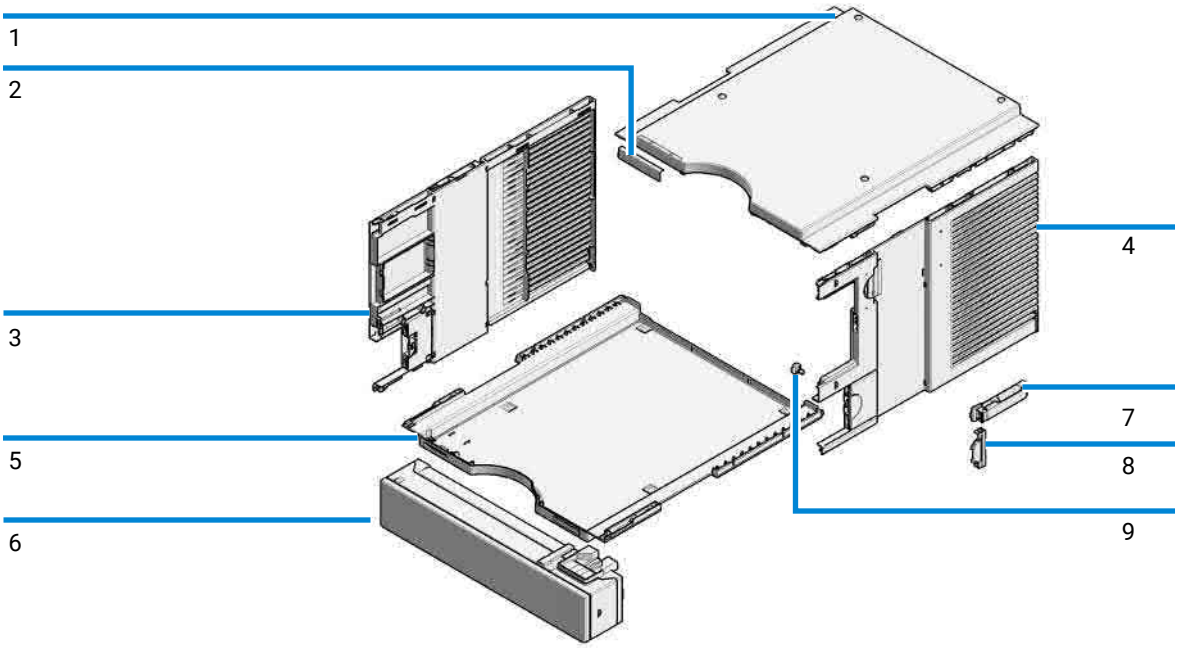

Figure 42: Cabinet Kit for Infinity II Vialsampler

#	p/n	Description
	G7129-68713	Cabinet Kit for Vialsampler/Preparative Autosampler **contains:**
1		Top cover
2	5431-0119	Name Plate Infinity III 1290

#	p/n	Description
2	5431-0117	Name Plate Infinity III 1260
2	5043-1804	Name Plate Infinity II 1290
2	5043-1805	Name Plate Infinity II 1260
3		Side Cover left
4		Side Cover right
5	5043-0286	Infinity II & III Base Cover
		Related parts:
6	G7129-60023	Column Shelf
7	5043-1013	Tubing Clip
8	5043-0874	Tubing Holder Insert (included in Side Cover, Right)
9	G1313-22406	Fixation Screw (included in Side Cover, Right)

Infinity III Door Kit

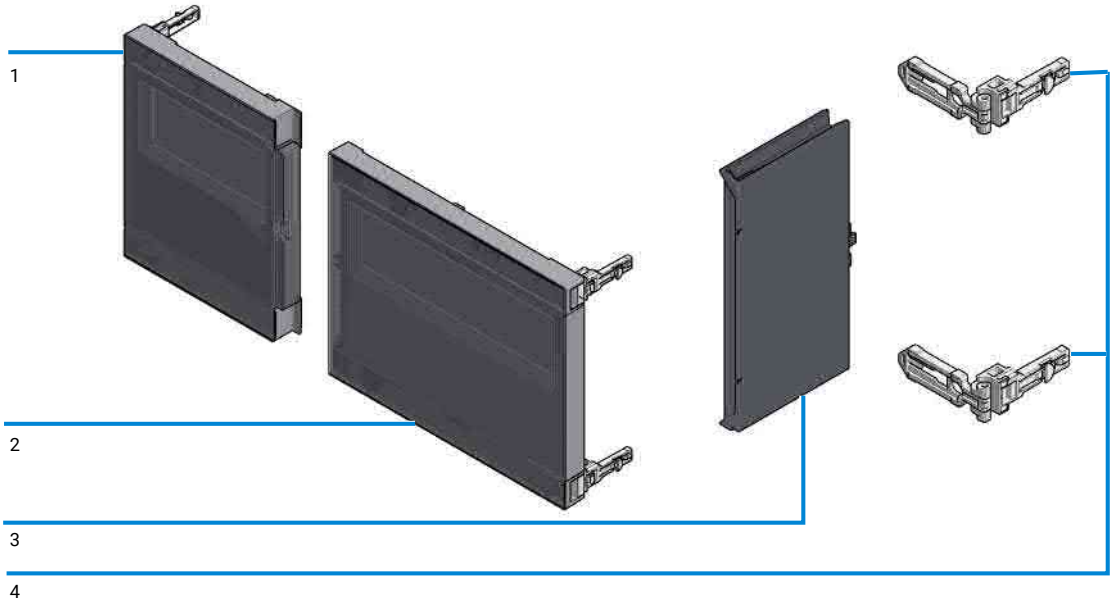

Figure 43: Door Kit for Infinity III Vialsampler

#	p/n	Description
	5004-0049	Door Kit for Infinity III Vialsampler **contains:**
1		Door panel, left (with integrated insulation foam)
2		Door panel, right (with integrated insulation foam)
3		Side window (with removable insulation foam)
4	5431-0016	Hinge Universal Latched (preinstalled in the doors)

Infinity II Door Kit

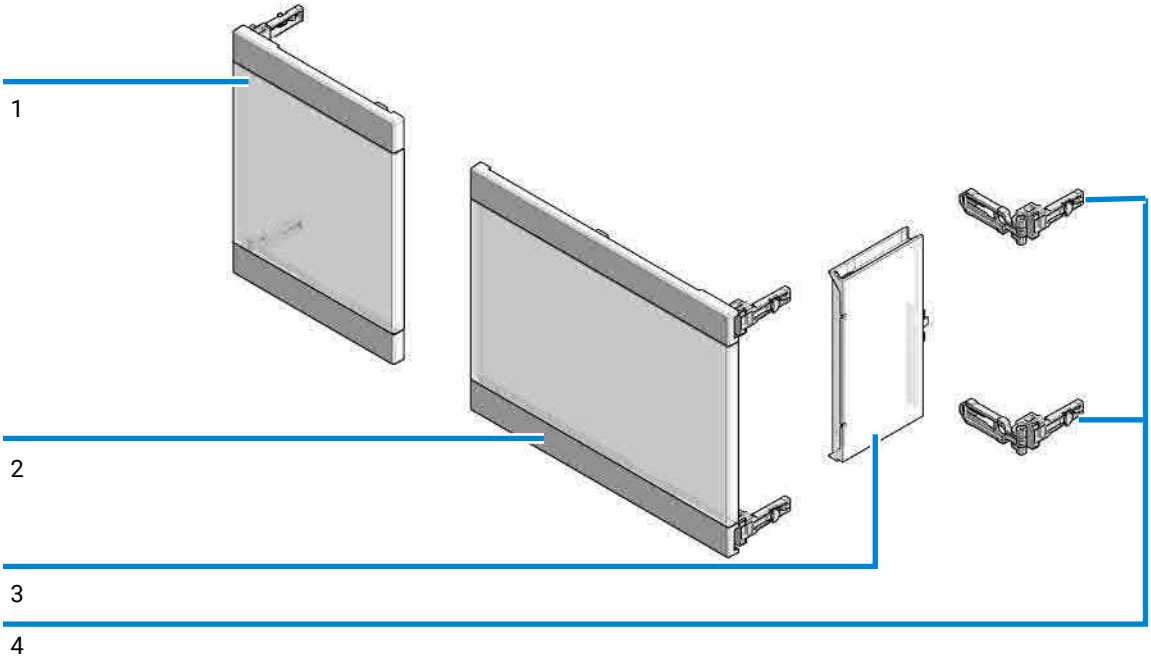

Figure 44: Door Kit for Infinity II Vialsampler

#	p/n	Description
	G7129-68002	Door Kit for Infinity II Vialsampler, Latched **contains:**
1		Door panel, left
2		Door panel, right
3		Side window
4	5431-0016	Hinge Universal Latched (preinstalled in the doors)

Door Insulation Kit for Infinity II Doors

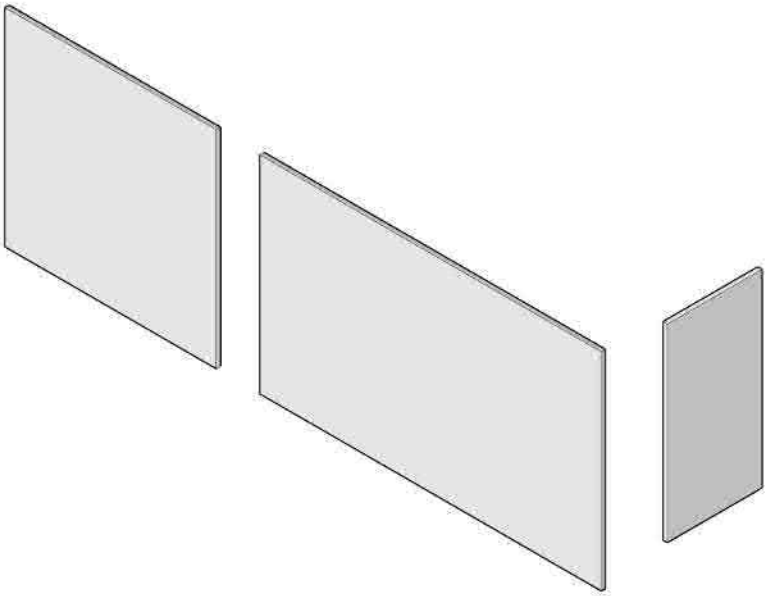

Figure 45: Door Insulation Kit for Infinity II Doors

p/n	Description
G7129-67004	Door Insulation Kit, Latched
G7129-67003	Door Insulation Kit

NOTE Use G7129-67004 for Infinity II Vial- and Autosamplers with latched doors, and G7129-67003 for older Infinity II Vial- and Autosamplers without latched doors.

Analytical Head Assembly (100 µL)

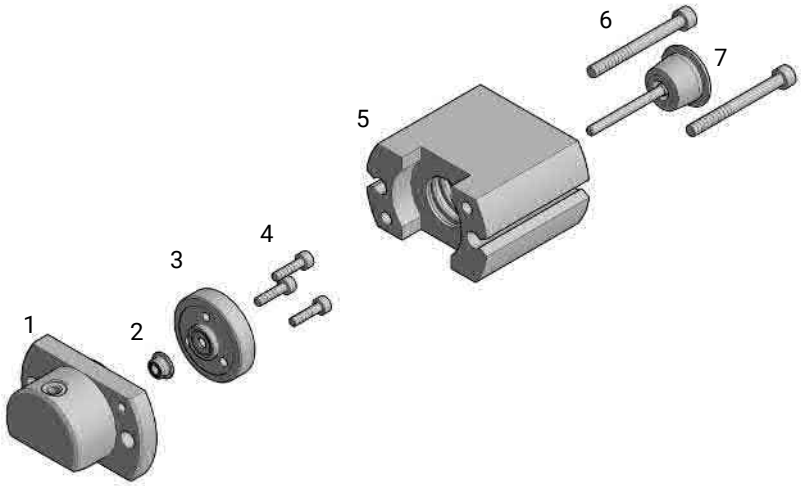

Figure 46: Analytical head assembly, 100 µL

#	p/n	Description
	G7129-60082	Analytical Head Assembly 100 µL
1	G7129-27710	Analytical-Head 100 µL
2	0905-1503	Metering Seal, 100 µL
3	G7129-60182	Seal Support, 100 µL
4	0515-4384	Screw, ST, M3.0 x 0.5 mm, 12 mm, T10
5	G7129-60006	Analytical Head Adapter
6	0515-0850	Screw M4, 40 mm long
7	5067-5678	Piston, 100 µL, Zirconium oxide
	0515-2118	Screw, ST, M5 x 0.8 , 60 mm, Hex 4 mm (not shown)

NOTE With the 100 µL analytical head, the maximum system pressure is limited to 800 bar.

Analytical Head Assembly (900 µL)

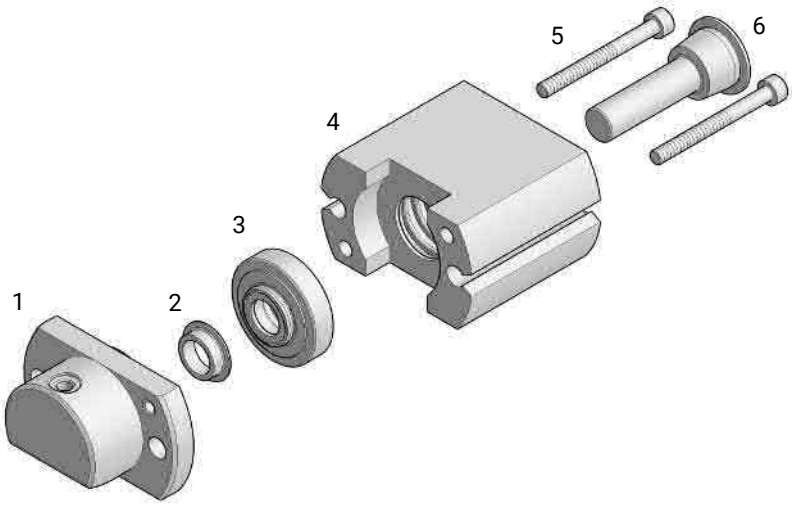

Figure 47: Analytical head assembly (900 µL)

#	p/n	Description
	G7129-60083	Analytical Head Assembly 900 µL
1	G7129-27790	Analytical-Head 900 µL
2	0905-1294	Metering Seal, 900 µL
3	5001-3764	Seal Support, 900 µL
4	G7129-60006	Analytical Head Adapter
5	0515-0850	Screw M4, 40 mm long
6	G4267-60462	Piston, 900 µL, Sapphire
	0515-2118	Screw, ST, M5 x 0.8 , 60 mm, Hex 4 mm (not shown)

NOTE With the 900 µL analytical head, the maximum system pressure is limited to 400 bar.

Analytical Head Assembly (40 µL)

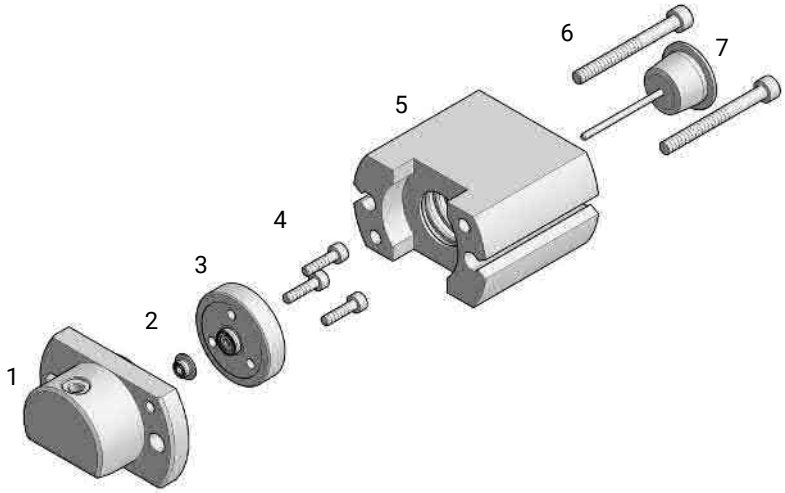

Figure 48: Analytical head assembly (40 µL)

#		p/n	Description
		G7129-60084	Analytical Head Assembly 40 µL
1		G7129-27704	Analytical-Head 40 µL
2		0905-1717	Metering Seal, 40 µL
3		G7129-60184	Seal Support, 40 µL
4		0515-4384	Screw, ST, M3.0 x 0.5 mm, 12 mm, T10
5		G7129-60006	Analytical Head Adapter
6		0515-0850	Screw M4, 40 mm long
7		5067-5920	Piston, 40 µL, Zirconium oxide
		0515-2118	Screw, ST, M5 x 0.8 , 60 mm, Hex 4 mm (not shown)

2 Position/6 Port Injection Valve, 600 bar

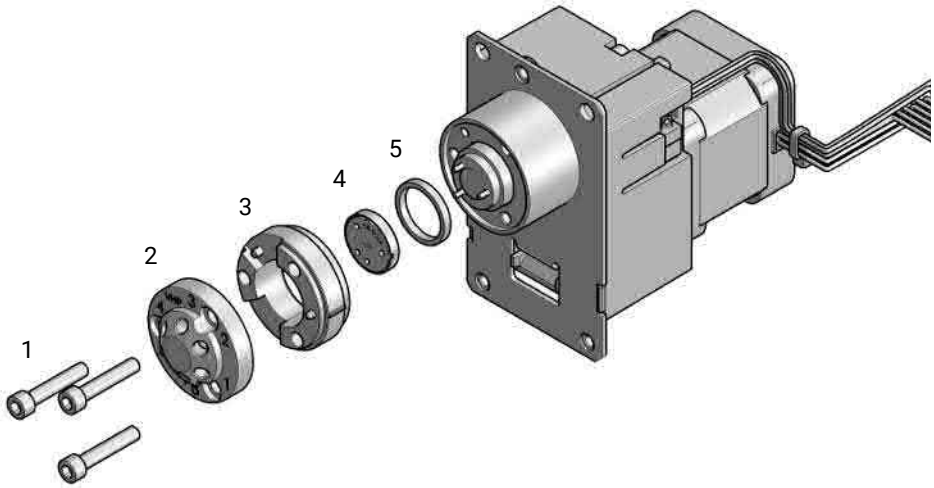

Figure 49: 2 Position/6 Port Injection Valve 600 bar/800 bar

#	p/n	Description
	5067-4245	2 Position/6 Port Injection Valve, 600 bar
1	5068-0018	Screws, ST, 8-32, Hex 9/64, 10/pk
2	5068-0215	Stator, Injection Valve, 600 bar/800 bar
3	5068-0118	Stator ring
4	0101-1416	Rotor Seal, PEEK, 600/800 bar
5	1535-4045	Bearing ring

2 Position/6 Port Injection Valve, 800 bar

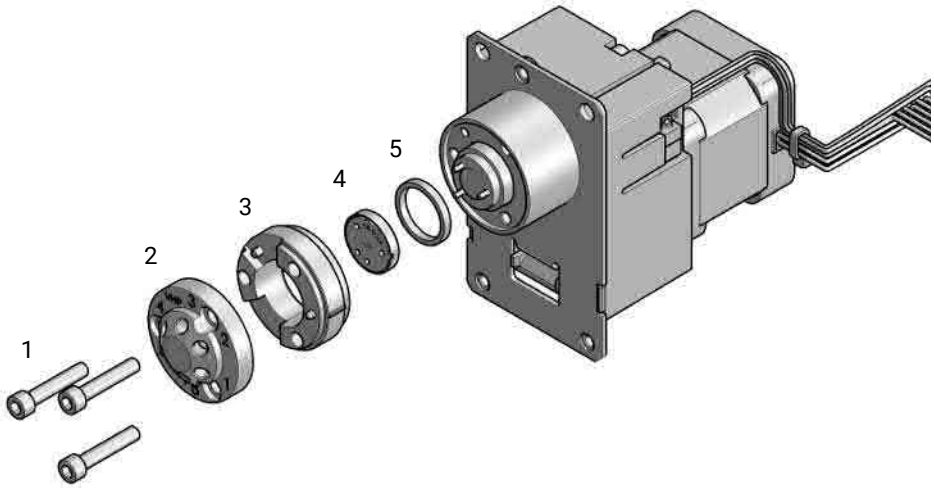

Figure 50: 2 Position/6 Port Injection Valve 600 bar/800 bar

#	p/n	Description
	5067-6689	2 Position/6 Port Injection Valve, 800 bar
1	5068-0018	Screws, ST, 8-32, Hex 9/64, 10/pk
2	5068-0215	Stator, Injection Valve, 600 bar/800 bar
3	5068-0118	Stator ring
4	0101-1416	Rotor Seal, PEEK, 600/800 bar
5	1535-4045	Bearing ring

2 Position/6 Port Injection Valve, 1300 bar

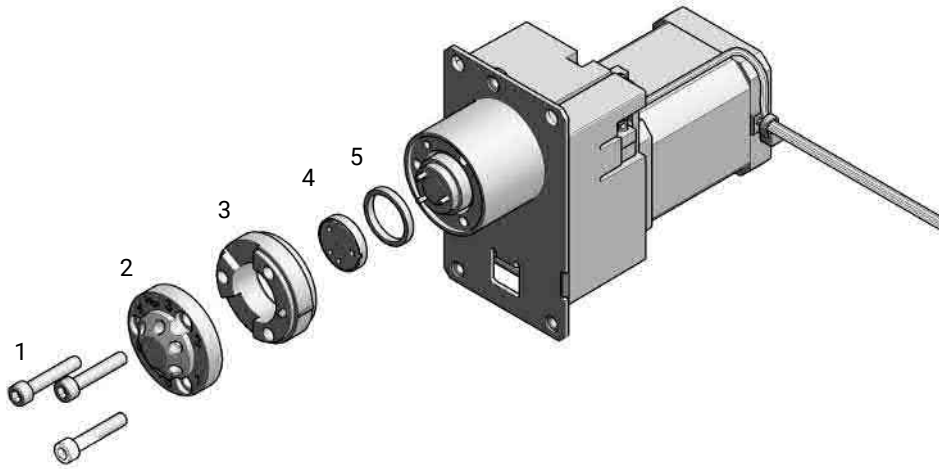

Figure 51: 2 Position/6 Port Injection Valve 1300 bar

#	p/n	Description
	5067-4238	2 Position/6 Port Injection Valve, 1300 bar
1	5068-0018	Screws, ST, 8-32, Hex 9/64, 10/pk
2	5068-0216	Stator, Injection Valve, 1300 bar
3	5068-0118	Stator ring
4	5068-0007	Rotor Seal, Vespel, 1300 bar
5	1535-4045	Bearing ring

10 Identifying Cables

This chapter provides information on cables used with the modules.

Cable Overview 362

Analog Cables 364

Remote Cables 366

BCD Cables 370

CAN/LAN Cables 372

RS-232 Cables 373

USB 374

Cable Overview

NOTE Never use cables other than the ones supplied by Agilent Technologies to ensure proper functionality and compliance with safety or EMC regulations.

Analog cables

p/n	Description
35900-60750	Agilent 35900A A/D converter
01046-60105	Analog cable (BNC to general purpose, spade lugs)

Remote cables

p/n	Description
5188-8029	ERI to general purpose
5188-8044	Remote Cable ERI – ERI
5188-8045	Remote Cable APG – ERI
5188-8059	ERI-Extension-Cable 1.2 m
5061-3378	Remote Cable to 35900 A/D converter
01046-60201	Agilent module to general purpose
5188-8057	Fraction Collection ERI remote Y-cable

CAN cables

p/n	Description
5181-1516	CAN cable, Agilent module to module, 0.5 m
5181-1519	CAN cable, Agilent module to module, 1 m

LAN cables

p/n	Description
5023-0203	Cross-over network cable, shielded, 3 m (for point to point connection)
5023-0202	Twisted pair network cable, shielded, 7 m (for point to point connection)

RS-232 cables

p/n	Description
RS232-61601	RS-232 cable, 2.5 m Instrument to PC, 9-to-9 pin (female). This cable has special pin-out, and is not compatible with connecting printers and plotters. It is also called "Null Modem Cable" with full handshaking where the wiring is made between pins 1-1, 2-3, 3-2, 4-6, 5-5, 6-4, 7-8, 8-7, 9-9.
5181-1561	RS-232 cable, 8 m

USB cables

p/n	Description
5188-8050	USB A M-USB Mini B 3 m (PC-Module)
5188-8049	USB A F-USB Mini B M OTG (Module to Flash Drive)

Analog Cables

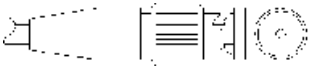

One end of these cables provides a BNC connector to be connected to Agilent modules. The other end depends on the instrument to which connection is being made.

Agilent Module to 35900 A/D converters

p/n 35900-60750	35900	Pin Agilent module	Signal Name
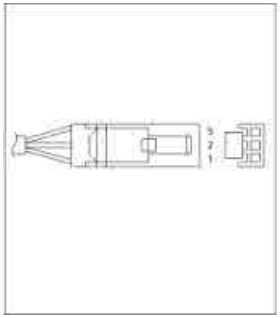	1		Not connected
	2	Shield	Analog -
	3	Center	Analog +

Agilent Module to BNC Connector

p/n 8120-1840	Pin BNC	Pin Agilent module	Signal Name
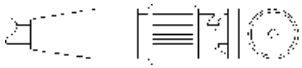	Shield	Shield	Analog -
	Center	Center	Analog +

Agilent Module to General Purpose

p/n 01046-60105	Pin	Pin Agilent module	Signal Name
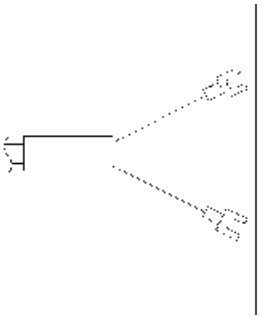	1		Not connected
	2	Black	Analog -
	3	Red	Analog +

Remote Cables

ERI (Enhanced Remote Interface)

- 5188-8029 ERI to general purpose (D-Sub 15 pin male - open end)
- 5188-8044 ERI to ERI (D_Sub 15 pin male - male)
- 5188-8059 ERI-Extension-Cable 1.2 m (D-Sub15 pin male / female)

p/n 5188-8029	pin	Color code	Enhanced Remote	Classic Remote	Active (TTL)
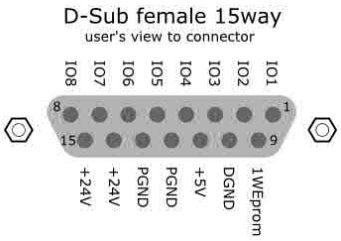	1	white	IO1	START REQUEST	Low
	2	brown	IO2	STOP	Low
	3	green	IO3	READY	High
	4	yellow	IO4	PEAK DETECT	Low
	5	grey	IO5	POWER ON	High
	6	pink	IO6	SHUT DOWN	Low
	7	blue	IO7	START	Low
	8	red	IO8	PREPARE	Low
	9	black	1wire DATA		
	10	violet	DGND		
	11	grey-pink	+5V ERI out		
	12	red-blue	PGND		
	13	white-green	PGND		
	14	brown-green	+24V ERI out		
	15	white-yellow	+24V ERI out		
	NC	yellow-brown			

NOTE

Configuration is different with old firmware revisions.
The configuration for IO4 and IO5 is swapped for modules with firmware lower than D.07.10.

NOTE

Peak Detection is used for LCMS systems connected with the Fraction Collection Remote Y-Cable (5188-8057).

- 5188-8045 ERI to APG (Connector D_Subminiature 15 pin (ERI), Connector D_Subminiature 9 pin (APG))

p/n 5188-8045	Pin (ERI)	Signal	Pin (APG)	Active (TTL)
	10	GND	1	
	1	Start Request	9	Low
	2	Stop	8	Low
	3	Ready	7	High
	5	Power on	6	High
	4	Future	5	
	6	Shut Down	4	Low
	7	Start	3	Low
	8	Prepare	2	Low
	Ground	Cable Shielding	NC	

- 5188-8057 ERI to APG and RJ45 (Connector D_Subminiature 15 pin (ERI), Connector D_Subminiature 9 pin (APG), Connector plug Cat5e (RJ45))

Table 25: 5188-8057 ERI to APG and RJ45

p/n 5188-8057	Pin (ERI)	Signal	Pin (APG)	Active (TTL)	Pin (RJ45)
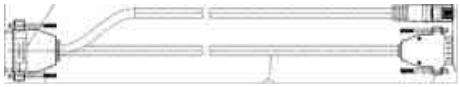					
	10	GND	1		5
	1	Start Request	9	High	
	2	Stop	8	High	
	3	Ready	7	High	
	4	Fraction Trigger	5	High	4
	5	Power on	6	High	
	6	Shut Down	4	High	
	7	Start	3	High	
	8	Prepare	2	High	
	Ground	Cable Shielding	NC		

One end of these cables provides an Agilent Technologies APG (Analytical Products Group) remote connector to be connected to Agilent modules. The other end depends on the instrument to be connected to.

Agilent Module to Agilent 35900 A/D Converters

p/n 5061-3378	Pin 35900 A/D	Pin Agilent module	Signal Name	Active (TTL)
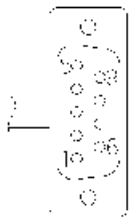	1 - White	1 - White	Digital ground	
	2 - Brown	2 - Brown	Prepare run	Low
	3 - Gray	3 - Gray	Start	Low
	4 - Blue	4 - Blue	Shut down	Low
	5 - Pink	5 - Pink	Not connected	
	6 - Yellow	6 - Yellow	Power on	High
	7 - Red	7 - Red	Ready	High
	8 - Green	8 - Green	Stop	Low
	9 - Black	9 - Black	Start request	Low

Agilent Module to General Purpose

p/n 01046-60201	Wire Color	Pin Agilent module	Signal Name	Active (TTL)
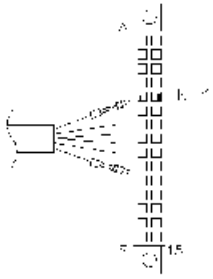	White	1	Digital ground	
	Brown	2	Prepare run	Low
	Gray	3	Start	Low
	Blue	4	Shut down	Low
	Pink	5	Not connected	
	Yellow	6	Power on	High
	Red	7	Ready	High
	Green	8	Stop	Low
	Black	9	Start request	Low

BCD Cables

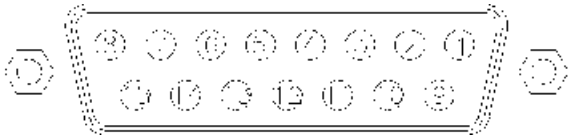

One end of these cables provides a 15-pin BCD connector to be connected to the Agilent modules. The other end depends on the instrument to be connected to

Agilent Module to General Purpose

p/n G1351-81600	Wire Color	Pin Agilent module	Signal Name	BCD Digit
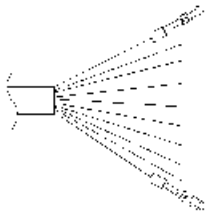	Green	1	BCD 5	20
	Violet	2	BCD 7	80
	Blue	3	BCD 6	40
	Yellow	4	BCD 4	10
	Black	5	BCD 0	1
	Orange	6	BCD 3	8
	Red	7	BCD 2	4
	Brown	8	BCD 1	2
	Gray	9	Digital ground	Gray
	Gray/pink	10	BCD 11	800
	Red/blue	11	BCD 10	400
	White/green	12	BCD 9	200
	Brown/green	13	BCD 8	100
	not connected	14		
	not connected	15	+ 5 V	Low

Agilent Module to 3396 Integrators

p/n 03396-60560	Pin 3396	Pin Agilent module	Signal Name	BCD Digit
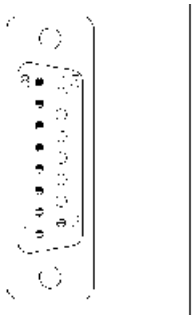	1	1	BCD 5	20
	2	2	BCD 7	80
	3	3	BCD 6	40
	4	4	BCD 4	10
	5	5	BCD0	1
	6	6	BCD 3	8
	7	7	BCD 2	4
	8	8	BCD 1	2
	9	9	Digital ground	
	NC	15	+ 5 V	Low

CAN/LAN Cables

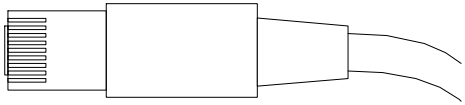

Both ends of this cable provide a modular plug to be connected to Agilent modules CAN or LAN connectors.

Can Cables

p/n	Description
5181-1516	CAN cable, Agilent module to module, 0.5 m
5181-1519	CAN cable, Agilent module to module, 1 m

LAN Cables

p/n	Description
5023-0203	Cross-over network cable, shielded, 3 m (for point to point connection)
5023-0202	Twisted pair network cable, shielded, 7 m (for point to point connection)

RS-232 Cables

p/n	Description
RS232-61601	RS-232 cable, 2.5 m Instrument to PC, 9-to-9 pin (female). This cable has special pin-out, and is not compatible with connecting printers and plotters. It is also called "Null Modem Cable" with full handshaking where the wiring is made between pins 1-1, 2-3, 3-2, 4-6, 5-5, 6-4, 7-8, 8-7, 9-9.
5181-1561	RS-232 cable, 8 m

USB

To connect a USB Flash Drive use a USB OTG cable with Mini-B plug and A socket.

p/n	Description
5188-8050	USB A M-USB Mini B 3 m (PC-Module)
5188-8049	USB A F-USB Mini B M OTG (Module to Flash Drive)

11 Hardware Information

This chapter describes the module in more detail on hardware and electronics.

General Hardware Information 376
Firmware Description 376
Electrical Connections 378
Interfaces 381
Instrument Layout 388
Early Maintenance Feedback (EMF) 388

Module-Specific Hardware Information 390
Setting the 6-bit Configuration Switch 390
Needle Parkstation 392
Hydraulic Box 393
Transport Assembly 395

General Hardware Information

This section provides detailed hardware information on firmware that is valid for this module.

Firmware Description

The firmware of the instrument consists of two independent sections:

- a non-instrument specific section, called *resident system*
- an instrument specific section, called *main system*

Resident System

This resident section of the firmware is identical for all Agilent 1100/1200/1220/1260/1290 series modules. Its properties are:

- the complete communication capabilities (CAN, LAN, USB and RS- 232)
- memory management
- ability to update the firmware of the 'main system'

Main System

Its properties are:

- the complete communication capabilities (CAN, LAN, USB and RS- 232)
- memory management
- ability to update the firmware of the 'resident system'

In addition the main system comprises the instrument functions that are divided into common functions like

- run synchronization through APG/ERI remote,
- error handling,
- diagnostic functions,

- or module specific functions like
  - internal events such as lamp control, filter movements,
  - raw data collection and conversion to absorbance.

Firmware Updates

Firmware updates can be done with the Agilent Lab Advisor software with files on the hard disk (latest version should be used).

Required tools, firmware and documentation are available from the Agilent web: https://www.agilent.com/en-us/firmwareDownload?whid=69761

The file naming conventions are:

PPPP_RVVV_XXX.dlb, where

- PPPP is the product number, for example, 1315B for the G1315B DAD,
- R the firmware revision, for example, A for G1315B or B for the G1315C DAD,
- VVV is the revision number, for example 650 is revision 6.50,
- XXX is the build number of the firmware.

For instructions on firmware updates refer to section *Replacing Firmware* in chapter *Maintenance* or use the documentation provided with the *Firmware Update Tools*.

NOTE

Update of main system can be done in the resident system only. Update of the resident system can be done in the main system only.
Main and resident firmware must be from the same set.

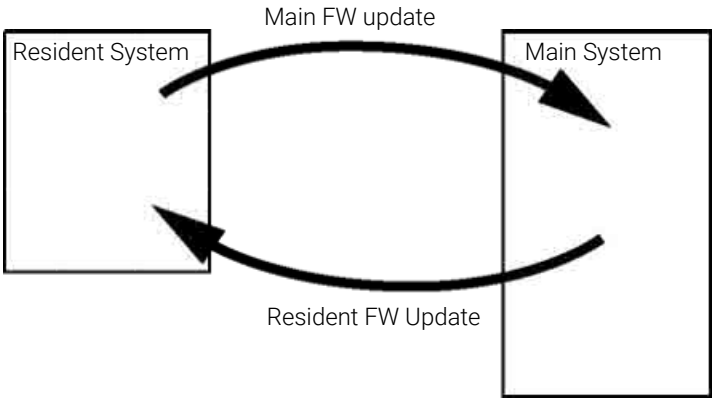

Figure 52: Firmware update mechanism

NOTE

Some modules are limited in downgrading due to their mainboard version or their initial firmware revision. For example, a G1315C DAD SL cannot be downgraded below firmware revision B.01.02 or to a A.xx.xx.
Some modules can be re-branded (e.g. G1314C to G1314B) to allow operation in specific control software environments. In this case, the feature set of the target type is used and the feature set of the original one is lost. After re-branding (e.g. from G1314B to G1314C), the original feature set is available again.
All this specific information is described in the documentation provided with the firmware update tools.

The firmware update tools, firmware and documentation are available from the Agilent web.

- https://www.agilent.com/en-us/firmwareDownload?whid=69761

Electrical Connections

- The CAN bus is a serial bus with high-speed data transfer. The two connectors for the CAN bus are used for internal module data transfer and synchronization.
- The ERI connector may be used in combination with other analytical instruments from Agilent Technologies if you want to use features such as start, stop, common shut down, prepare, and so on.

- With the appropriate software, the LAN connector may be used to control the module from a computer through a LAN connection. This connector is activated and can be configured with the configuration switch.
- With the appropriate software, the USB connector may be used to control the module from a computer through a USB connection.
- The power input socket accepts a line voltage of 100 – 240 VAC ± 10 % with a line frequency of 50 or 60 Hz. Maximum power consumption varies by module. There is no voltage selector on your module because the power supply has wide-ranging capability. There are no externally accessible fuses because automatic electronic fuses are implemented in the power supply.

WARNING

Electric shock due to insufficient insulation of connected instruments

Personal injury or damage to the instrument

— **Any other instruments connected to this instrument shall be approved to a suitable safety standard and must include reinforced insulation from the mains.**

NOTE

Never use cables other than the ones supplied by Agilent Technologies to ensure proper functionality and compliance with safety or EMC regulations.

Rear View of the Module

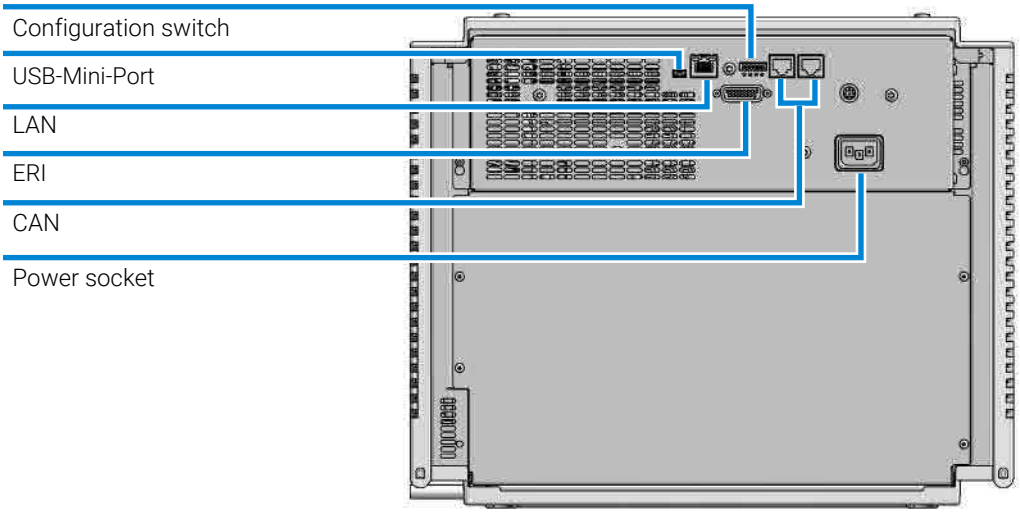

Figure 53: Rear view of the sampler - electrical connections and label

Serial Number Information

The serial number information on the instrument labels provide the following information:

CCXZZ00000	Format
CC	Country of manufacturing • DE = Germany • JP = Japan • CN = China
X	Alphabetic character A-Z (used by manufacturing)
ZZ	Alpha-numeric code 0-9, A-Z, where each combination unambiguously denotes a module (there can be more than one code for the same module)
00000	Serial number

Interfaces

The Agilent InfinityLab LC Series modules provide the following interfaces:

Table 26: Agilent InfinityLab LC Series interfaces

Module	CAN	USB	LAN (on-board)	RS-232	Analog	APG (A) / ERI (E)	Special
Pumps							
G7104A/C	2	No	Yes	Yes	1	A	
G7110B	2	Yes	Yes	No	No	E	
G7111A/B, G5654A	2	Yes	Yes	No	No	E	
G7112B	2	Yes	Yes	No	No	E	
G7120A, G7132A	2	No	Yes	Yes	1	A	
G7161A/B	2	Yes	Yes	No	No	E	
Samplers							
G7129A/B/C	2	Yes	Yes	No	No	E	
G7167A/B/C, G7137A, G5668A, G3167A	2	Yes	Yes	No	No	E	
G7157A	2	Yes	Yes	No	No	E	
Detectors							
G7114A/B	2	Yes	Yes	No	1	E	
G7115A	2	Yes	Yes	No	1	E	
G7117A/B/C	2	Yes	Yes	No	1	E	
G7121A/B	2	Yes	Yes	No	1	E	
G7162A/B	2	Yes	Yes	No	1	E	
G7165A	2	Yes	Yes	No	1	E	
Fraction Collectors							
G7158B	2	Yes	Yes	No	No	E	
G7159B	2	Yes	Yes	No	No	E	

Module	CAN	USB	LAN (on-board)	RS-232	Analog	APG (A) / ERI (E)	Special
G7166A	2	No	No	No	No	No	Requires a host module with on-board LAN with minimum FW B.06.40 or C.06.40, or with additional G1369C LAN Card
G1364E/F, G5664B	2	Yes	Yes	No	No	E	THERMOSTAT for G1330B
Others							
G1170A	2	No	No	No	No	No	Requires a host module with on-board LAN or with additional G1369C LAN Card.
G7116A/B	2	No	No	No	No	No	Requires a host module with on-board LAN or with additional G1369C LAN Card.
G7122A	No	No	No	Yes	No	A	
G7170B	2	No	No	No	No	No	Requires a host module with on-board LAN with minimum FW B.06.40 or C.06.40, or with additional G1369C LAN Card

NOTE

LAN connection is made between at least one of the Agilent modules and the Control PC.

— If an Assist Hub is installed, connect the LAN to the Lab LAN port of this module.

— If an Assist Hub is NOT installed and a detector (DAD/MWD/FLD/VWD/RID) is installed, connect the LAN to this module.

— If an Assist Hub is NOT installed and there are multiple detectors with spectral capabilities, consider using additional LAN connections for each detector.

— If an Assist Hub is installed, connect additional LAN connections from the detectors and pumps to the Assist Hub.

- CAN connectors as interface to other modules
- LAN connector as interface to the control software
- RS-232C as interface to a computer

- USB (Universal Series Bus) as interface to a computer
- REMOTE connector as interface to other Agilent products
- Analog output connector for signal output

Overview Interfaces

CAN

The CAN is inter-module communication interface. It is a 2-wire serial bus system supporting high speed data communication and real-time requirement.

LAN

The modules have either an interface slot for a LAN card (e.g. Agilent G1369B/C LAN Interface) or they have an on-board LAN interface (e.g. detectors G1315C/D DAD and G1365C/D MWD). This interface allows the control of the module/ system via a PC with the appropriate control software. Some modules have neither on-board LAN nor an interface slot for a LAN card (e.g. G1170A Valve Drive or G4227A Flexible Cube). These are hosted modules and require a Host module with firmware B.06.40 or later or with additional G1369C LAN Card.

NOTE

LAN connection is made between at least one of the Agilent modules and the Control PC.

- If an Assist Hub is installed, connect the LAN to the Lab LAN port of this module.
- If an Assist Hub is NOT installed and a detector (DAD/MWD/FLD/VWD/RID) is installed, connect the LAN to this module.
- If an Assist Hub is NOT installed and there are multiple detectors with spectral capabilities, consider using additional LAN connections for each detector.
- If an Assist Hub is installed, connect additional LAN connections from the detectors and pumps to the Assist Hub.

USB

The USB interface replaces the RS-232 Serial interface in new generation modules. For details on USB refer to USB (Universal Serial Bus) on page 387.

Analog Signal Output

The analog signal output can be distributed to a recording device. For details refer to the description of the module's mainboard.

Remote (ERI)

The ERI (Enhanced Remote Interface) connector may be used in combination with other analytical instruments from Agilent Technologies if you want to use features as common shut down, prepare, and so on.

It allows easy connection between single instruments or systems to ensure coordinated analysis with simple coupling requirements.

The subminiature D connector is used. The module provides one remote connector which is inputs/outputs (wired- or technique).

To provide maximum safety within a distributed analysis system, one line is dedicated to SHUT DOWN the system's critical parts in case any module detects a serious problem. To detect whether all participating modules are switched on or properly powered, one line is defined to summarize the POWER ON state of all connected modules. Control of analysis is maintained by signal readiness READY for next analysis, followed by START of run and optional STOP of run triggered on the respective lines. In addition PREPARE and START REQUEST may be issued. The signal levels are defined as:

- standard TTL levels (0 V is logic true, + 5.0 V is false),
- fan-out is 10,
- input load is 2.2 kOhm against + 5.0 V, and
- output are open collector type, inputs/outputs (wired- or technique).

NOTE

All common TTL circuits operate with a 5 V power supply. A TTL signal is defined as "low" or L when between 0 V and 0.8 V and "high" or H when between 2.0 V and 5.0 V (with respect to the ground terminal).

Table 27: ERI signal distribution

Pin	Signal	Description
1	START REQUEST	(L) Request to start injection cycle (for example, by start key on any module). Receiver is the autosampler.
2	STOP	(L) Request to reach system ready state as soon as possible (for example, stop run, abort or finish and stop injection). Receiver is any module performing run-time controlled activities.

Pin	Signal	Description
3	READY	(H) System is ready for next analysis. Receiver is any sequence controller.
4	POWER ON	(H) All modules connected to system are switched on. Receiver is any module relying on operation of others.
5		Not used
6	SHUT DOWN	(L) System has serious problem (for example, leak: stops pump). Receiver is any module capable to reduce safety risk.
7	START	(L) Request to start run / timetable. Receiver is any module performing run-time controlled activities.
8	PREPARE	(L) Request to prepare for analysis (for example, calibration, detector lamp on). Receiver is any module performing pre-analysis activities.

Special Interfaces

There is no special interface for this module.

ERI (Enhanced Remote Interface)

ERI replaces the AGP Remote Interface that is used in the HP 1090/1040/1050/1100 HPLC systems and Agilent 1100/1200/1200 Infinity HPLC modules. All new InfinityLab LC Series products using the communication board core electronics use ERI. This interface is already used in the Agilent Universal Interface Box 2 (UIB2)

ERI Description

The ERI interface contains eight individual programmable input/output pins. In addition, it provides 24 V power and 5 V power and a serial data line to detect and recognize further add-ons that could be connected to this interface. This way the interface can support various additional devices like sensors, triggers (in and out) and small controllers, etc.

ERI

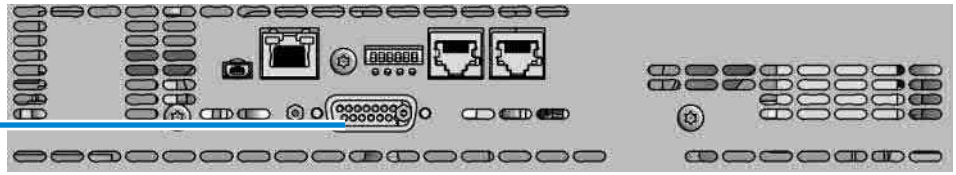

Figure 54: Location of the ERI interface

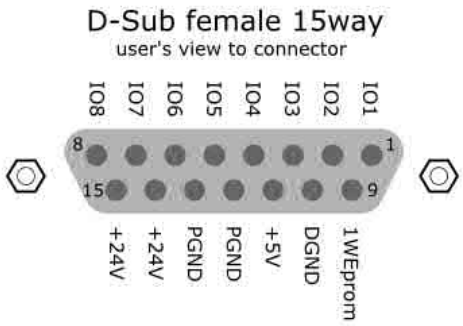

Pin	Enhanced Remote
1	IO 1 (START REQUEST)
2	IO 2 (STOP)
3	IO 3 (READY)
4	IO 4 (POWER ON)
5	IO 5 (NOT USED)
6	IO 6 (SHUT DOWN)
7	IO 7 (START)
8	IO 8 (PREPARE)
9	1 wire DATA
10	DGND
11	+5 V ERI out
12	PGND
13	PGND
14	+24 V ERI out
15	+24 V ERI out

IO (Input/Output) Lines

- Eight generic bi-directional channels (input or output).
- Same as the APG Remote.
- Devices like valves, relays, ADCs, DACs, controllers can be supported/ controlled.

1-Wire Data (Future Use)

This serial line can be used to read out an EPROM or write into an EPROM of a connected ERI-device. The firmware can detect the connected type of device automatically and update information in the device (if required).

5V Distribution (Future Use)

- Available directly after turning on the hosting module (assures that the firmware can detect certain basic functionality of the device).
- For digital circuits or similar.
- Provides 500 mA maximum.
- Short-circuit proof with automatic switch off (by firmware).

24V Distribution (Future Use)

- Available by firmware command (defined turn on/off).
- For devices that need higher power
  - Class 0: 0.5 A maximum (12 W)
  - Class 1: 1.0 A maximum (24 W)
  - Class 2: 2.0 A maximum (48 W)
- Class depends on hosting module's internal power overhead.
- If a connected device requires more power the firmware detects this (overcurrent detection) and provides the information to the user interface.
- Fuse used for safety protection (on board).
- Short circuit will be detected through hardware.

USB (Universal Serial Bus)

USB (Universal Serial Bus) - replaces RS232, supports:

- a PC with control software (for example Agilent Lab Advisor)
- USB Flash Disk

Instrument Layout

The industrial design of the module incorporates several innovative features. It uses Agilent's E-PAC concept for the packaging of electronics and mechanical assemblies. This concept is based upon the use of expanded polypropylene (EPP) layers of foam plastic spacers in which the mechanical and electronic boards components of the module are placed. This pack is then housed in a metal inner cabinet which is enclosed by a plastic external cabinet. The advantages of this packaging technology are:

- virtual elimination of fixing screws, bolts or ties, reducing the number of components and increasing the speed of assembly/disassembly,
- the plastic layers have air channels molded into them so that cooling air can be guided exactly to the required locations,
- the plastic layers help cushion the electronic and mechanical parts from physical shock, and
- the metal inner cabinet shields the internal electronics from electromagnetic interference and also helps to reduce or eliminate radio frequency emissions from the instrument itself.

Early Maintenance Feedback (EMF)

Maintenance requires the exchange of components that are subject to wear or stress. Ideally, the frequency at which components are exchanged should be based on the intensity of use of the module and the analytical conditions, and not on a predefined time interval. The early maintenance feedback (EMF) feature monitors the use of specific components in the instrument, and provides feedback when the user-selectable limits have been exceeded. The visual feedback in the user interface provides an indication that maintenance procedures should be scheduled.

EMF Counters

EMF counters increment with use and can be assigned a maximum limit which provides visual feedback in the user interface when the limit is exceeded. Some counters can be reset to zero after the required maintenance procedure.

Using the EMF Counters

The user-settable EMF limits for the EMF Counters enable the early maintenance feedback to be adapted to specific user requirements. The useful maintenance cycle is dependent on the requirements for use. Therefore, the definition of the maximum limits needs to be determined based on the specific operating conditions of the instrument.

Setting the EMF Limits

The setting of the EMF limits must be optimized over one or two maintenance cycles. Initially the default EMF limits should be set. When instrument performance indicates maintenance is necessary, take note of the values displayed by the EMF counters. Enter these values (or values slightly less than the displayed values) as EMF limits, and then reset the EMF counters to zero. The next time the EMF counters exceed the new EMF limits, the EMF flag will be displayed, providing a reminder that maintenance needs to be scheduled.

Module-Specific Hardware Information

This section provides detailed module-specific hardware information.

Setting the 6-bit Configuration Switch

The 6-bit configuration switch is located at the rear of the module with communication board electronics. Switch settings provide configuration parameters for LAN and instrument specific initialization procedures.

All modules with communication board electronics:

- Default is ALL switches DOWN (best settings).
  - Default IP address for LAN 192.168.254.11
- For specific LAN modes switches 4-5 must be set as required.
- For boot resident/cold start modes switches 1+2 or 6 must be UP.

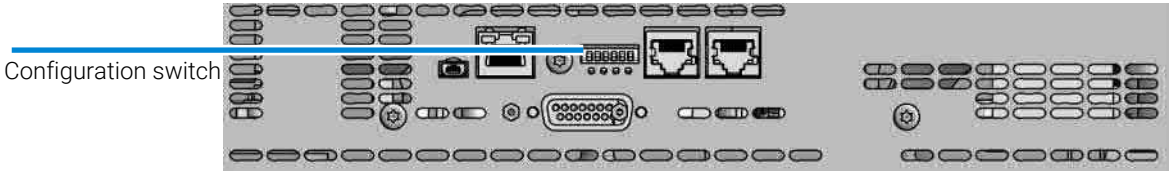

Figure 55: Location of configuration switch

Table 28: 6-bit configuration switch

SW1	SW2	SW3	SW4	SW5	SW6	Mode	Init Mode
0	0	0	0	0	0	COM	Use Default IP Address (192.168.254.11, Subnet mask: 255.255.255.0)
0	0	0	0	1	0	COM	Use Stored IP Address
0	0	0	1	0	0	COM	USE DHCP to request IP Address (Host name will be the MAC address)
1	0	0	0	0	0	Test	Boot Main System/Keep Data

SW1	SW2	SW3	SW4	SW5	SW6	Mode	Init Mode
1	1	0	0	0	0	Test	Boot Resident System/Keep Data
1	0	0	0	0	1	Test	Boot Main System/Revert to Default Data
1	1	0	0	0	1	Test	Boot Resident System/Revert to Default Data

Legend:

0 (switch down), 1 (switch up), SW (switch)

Special Settings

Boot-Resident/Main

Firmware update procedures may require this mode in case of firmware loading errors (main/resident firmware part).

If you use the following switch settings and power the instrument up again, the instrument firmware stays in the resident/main mode. In resident mode, it is not operable as a module. It only uses basic functions of the operating system for example, for communication. In this mode the main firmware can be loaded (using update utilities).

Forced Cold Start

A forced cold start can be used to bring the module into a defined mode with default parameter settings.

- Boot Main System / Revert to Default Data

  The instrument will boot to main mode and changes to the module's default parameter. May be also required to load resident firmware into the module.
- Boot Resident System / Revert to Default Data

  The instrument will boot to resident mode and changes to the module's default parameter. May be also required to load main firmware into the module.

CAUTION

Loss of data

Forced cold start erases all methods and data stored in the non-volatile memory. Exceptions are calibration settings, diagnosis and repair log books which will not be erased.

— Save your methods and data before executing a forced cold start.

Needle Parkstation

The needle parkstation comprises two main assemblies: needle drive and wash port.

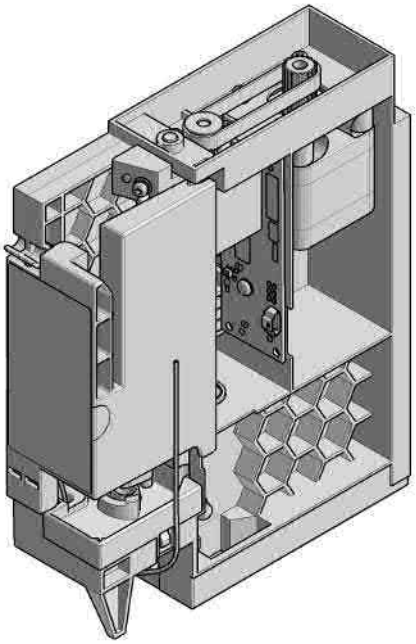

Figure 56: Needle Station

Needle-Drive

The needle movement is driven by a stepper motor connected to the spindle assembly by a toothed belt. The circular motion of the motor is converted to linear motion by the drive nut on the spindle assembly. The upper and lower needle positions are detected by reflection sensors on the needle station board, while the needle-in-vial position is determined by counting the motor steps from the upper needle-sensor position.

Hydraulic Box

The hydraulic box comprises two main assemblies: metering device, and injection valve.

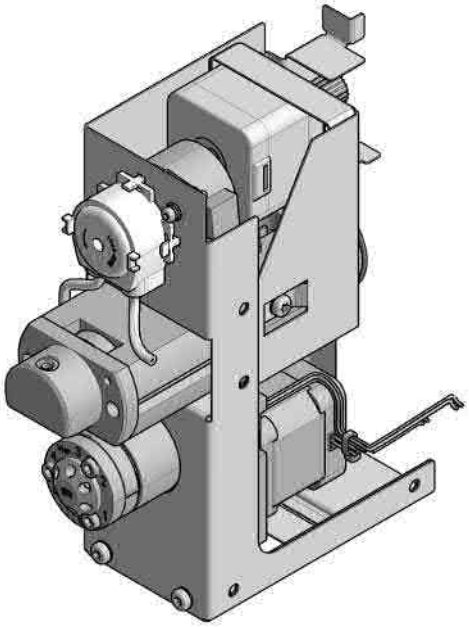

Figure 57: Hydraulic Unit

NOTE

The replacement hydraulic box excludes the injection valve and metering head assemblies.

Analytical head

The analytical head is driven by the stepper motor that is connected to the drive shaft by a toothed belt. The drive nut on the spindle converts the circular movement of the spindle to linear motion. The drive nut pushes the sapphire piston against the tension of the spring into the analytical head. The base of the piston sits on the large bearing of the drive nut, which ensures the piston is always centered. A ceramic ring guides the movement of the piston in the analytical head. The home position of the piston is sensed by an optical sensor on the hydraulic unit board while the sample volume is determined by counting the number of steps from the home position. The backward movement of the piston (driven by the spring) draws sample from the vial.

Injection valve

The two-position 6-port injection valve is driven by a stepper motor. Only five of the six ports are used (port 3 is not used). A lever/slider mechanism transfers the movement of the stepper motor to the injection valve. Two microswitches monitor switching of the valve (bypass and mainpass (main path) end positions). No valve adjustments are required after replacing internal components.

Transport Assembly

The transport unit comprises an X-axis slide (left-right motion), a Z-axis arm (up-down motion), and a gripper assembly (rotation and vial-gripping).

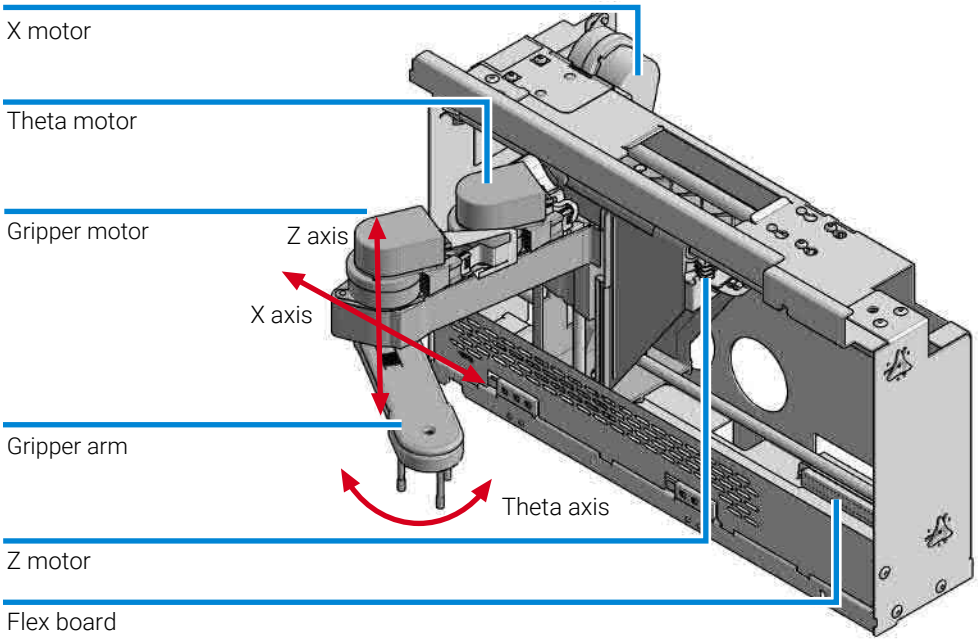

Figure 58: Transport Assembly

The transport assembly uses four stepper motors driven in closed-loop mode for accurate positioning of the gripper assembly. The rotational movement of the motors is converted to linear motion (X- and Z-axes) by toothed belts connected to the drive spindles. The rotation (theta axes) of the gripper assembly is transferred from the motor by a toothed belt and series of gears. The opening and closing of the gripper fingers are driven by a stepper motor linked by a toothed belt to the planetary gearing inside the gripper assembly.

The stepper motor positions are determined by the optical encoders mounted onto the stepper-motor housing. The encoders monitor the position of the motors continually, and correct for position errors automatically (e.g. if the gripper is accidentally moved out of position when loading vials into the vial tray). The initialization positions of the moving components are sensed by reflection

sensors mounted on the flex board. These positions are used by the processor to calculate the actual motor position. An additional six reflection sensors for tray recognition are mounted on the flex board at the front of the assembly.

12 Appendix

This chapter provides additional information on safety, legal and web.

General Safety Information 398
Safety Standards 398
General 398
Before Applying Power 399
Ground the Instrument 399
Do Not Operate in an Explosive Atmosphere 400
Do Not Remove the Instrument Cover 400
Do Not Modify the Instrument 400
In Case of Damage 400
Solvent Information 401
Refrigerant 403
Magnets 404
Safety Symbols 405

Material Information 407
General Information About Solvent/Material Compatibility 407

At-a-Glance Details About Agilent Capillaries 413

Waste Electrical and Electronic Equipment (WEEE) Directive 417

Radio Interference 418

RFID Statement 419

Sound Emission 421

Agilent Technologies on Internet 422

General Safety Information

The following general safety precautions must be observed during all phases of operation, service, and repair of this instrument. Failure to comply with these precautions or with specific warnings elsewhere in this manual violates safety standards of design, manufacture, and intended use of the instrument. Agilent Technologies assumes no liability for the customer's failure to comply with these requirements.

WARNING

Ensure the proper usage of the equipment.

The protection provided by the equipment may be impaired.

- **The operator of this instrument is advised to use the equipment in a manner as specified in this manual.**

Safety Standards

This is a Safety Class I instrument (provided with terminal for protective earthing) and has been manufactured and tested according to international safety standards.

General

Do not use this product in any manner not specified by the manufacturer. The protective features of this product may be impaired if it is used in a manner not specified in the operation instructions.

Before Applying Power

WARNING

Wrong voltage range, frequency or cabling

Personal injury or damage to the instrument

- **Verify that the voltage range and frequency of your power distribution matches to the power specification of the individual instrument.**
- **Never use cables other than the ones supplied by Agilent Technologies to ensure proper functionality and compliance with safety or EMC regulations.**
- **Make all connections to the unit before applying power.**

WARNING

Use of unsupplied cables

Using cables not supplied by Agilent Technologies can lead to damage of the electronic components or personal injury.

- **Never use cables other than the ones supplied by Agilent Technologies to ensure proper functionality and compliance with safety or EMC regulations.**

NOTE

Note the instrument's external markings described under Safety Symbols on page 405.

Ground the Instrument

WARNING

Missing electrical ground

Electrical shock

- **If your product is provided with a grounding type power plug, the instrument chassis and cover must be connected to an electrical ground to minimize shock hazard.**
- **The ground pin must be firmly connected to an electrical ground (safety ground) terminal at the power outlet. Any interruption of the protective (grounding) conductor or disconnection of the protective earth terminal will cause a potential shock hazard that could result in personal injury.**

Do Not Operate in an Explosive Atmosphere

WARNING

Presence of flammable gases or fumes

Explosion hazard

- **Do not operate the instrument in the presence of flammable gases or fumes.**

Do Not Remove the Instrument Cover

WARNING

Instrument covers removed

Electrical shock

- **Do Not Remove the Instrument Cover**
- **Only Agilent authorized personnel are allowed to remove instrument covers. Always disconnect the power cables and any external circuits before removing the instrument cover.**

Do Not Modify the Instrument

Do not install substitute parts or perform any unauthorized modification to the product. Return the product to an Agilent Sales and Service Office for service and repair to ensure that safety features are maintained.

In Case of Damage

WARNING

Damage to the module

Personal injury (for example electrical shock, intoxication)

- **Instruments that appear damaged or defective should be made inoperative and secured against unintended operation until they can be repaired by qualified service personnel.**

Solvent Information

WARNING

Toxic, flammable and hazardous solvents, samples and reagents

The handling of solvents, samples and reagents can hold health and safety risks.

- **When working with these substances observe appropriate safety procedures (for example by wearing goggles, safety gloves and protective clothing) as described in the material handling and safety data sheet supplied by the vendor, and follow good laboratory practice.**
- **Do not use solvents with an auto-ignition temperature below 200 °C (392 °F). Do not use solvents with a boiling point below 56 °C (133 °F).**
- **Avoid high vapor concentrations. Keep the solvent temperature at least 40 °C (72 °F) below the boiling point of the solvent used. This includes the solvent temperature in the sample compartment. For the solvents methanol and ethanol keep the solvent temperature at least 25 °C (45 °F) below the boiling point.**
- **Do not operate the instrument in an explosive atmosphere.**
- **Do not use solvents of ignition Class IIC according IEC 60079-20-1 (for example, carbon disulfide).**
- **Reduce the volume of substances to the minimum required for the analysis.**
- **Never exceed the maximum permissible volume of solvents (8 L) in the solvent cabinet. Do not use bottles that exceed the maximum permissible volume as specified in the usage guideline for solvent cabinet.**
- **Ground the waste container.**
- **Regularly check the filling level of the waste container. The residual free volume in the waste container must be large enough to collect the waste liquid.**
- **To achieve maximal safety, regularly check the tubing for correct installation.**

NOTE

For details, see the usage guideline for the solvent cabinet. A printed copy of the guideline has been shipped with the solvent cabinet, electronic copies are available in the Agilent Information Center or via the Internet.

Recommendations on the Use of Solvents

Observe the following recommendations on the use of solvents.

- Brown glass ware can avoid growth of algae.
- Follow the recommendations for avoiding the growth of algae, see the pump manuals.
- Small particles can permanently block capillaries and valves. Therefore, always filter solvents through 0.22 µm filters.
- Avoid or minimize the use of solvents that may corrode parts in the flow path. Consider specifications for the pH range given for different materials such as flow cells, valve materials etc. and recommendations in subsequent sections.
- Avoid the use of the following steel-corrosive solvents:
  - solutions of alkali halides and their respective acids (for example, lithium iodide, potassium chloride, and so on),
  - high concentrations of inorganic acids like sulfuric acid and nitric acid, especially at higher temperatures (if your chromatography method allows, replace by phosphoric acid or phosphate buffer which are less corrosive against stainless steel),
  - halogenated solvents or mixtures which form radicals and/or acids, for example:

    $2CHCl_3 + O_2 \rightarrow 2COCl_2 + 2HCl$

    This reaction, in which stainless steel probably acts as a catalyst, occurs quickly with dried chloroform if the drying process removes the stabilizing alcohol,
  - chromatographic grade ethers, which can contain peroxides (for example, THF, dioxane, diisopropyl ether) should be filtered through dry aluminium oxide which adsorbs the peroxides,
  - solvents containing strong complexing agents (e.g. EDTA),
  - mixtures of carbon tetrachloride with 2-propanol or THF.
- Avoid the use of dimethyl formamide (DMF). Polyvinylidene fluoride (PVDF), which is used in leak sensors, is not resistant to DMF.

Recommended Wash Solvents

- water
- ethanol

- methanol
- water/acid (especially for basic compounds)
- water/base (especially for acidic compounds)
- water/acetonitrile

NOTE For different wash solvents as mentioned above, verify that the wash solvent is suitable for the silicone wash tubing.

Solvent Compatibility of Tubings for Peristaltic Pumps

The table shows the chemical resistance properties of Silicone and PharMed tubing to different needle wash solvents:

Table 29: Solvent Compatibility of Silicone and PharMed Tubing

	Silicone	PharMed
Acids		
• weak	• good	• very good
• medium	• unsatisfactory	• good
• strong	• not recommended	• not recommended
Alkaline solution		
• weak	• good	• very good
• medium	• unsatisfactory	• very good
• strong	• not recommended	• good
Hydrocarbons		
• aliphatic	• not recommended	• not recommended
• aromatizised	• not recommended	• not recommended
• halogenated	• not recommended	• not recommended

Refrigerant

Table 30: Physical properties of refrigerant R600a (isobutane)

Molecular weight	58.12
Critical temperature	134.98 °C

Critical pressure	36.6 bar
Boiling point	-11.7 °C

CAUTION

General hazards and improper disposal

Improper disposal of the media and components used pollutes the environment.

- The disposal or scrapping of the Sample Thermostat must be carried out by a qualified disposal company.
- All media must be disposed of in accordance with national and local regulations.
- Please contact your local Agilent Service Center in regard to safe environmental disposal of the appliance or check www.agilent.com for more info.

CAUTION

Risk of fire or explosion

- Dispose of properly in accordance with federal or local regulations. Flammable Refrigerant Used.
- Do not dispose of in domestic household waste.
- To return unwanted products, contact your local Agilent office, or see http://www.agilent.com for more information.

Magnets

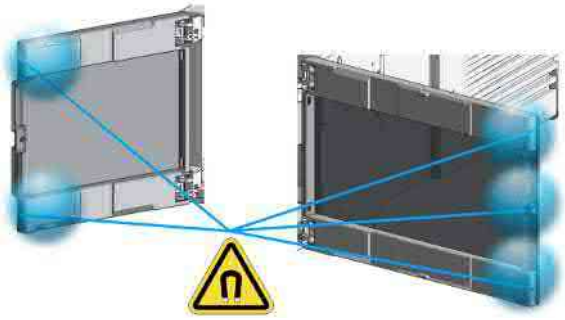

Figure 59: Magnets in doors of pumps, autosamplers, detectors, and fraction collectors

Safety Symbols

Table 31: Symbols

	The apparatus is marked with this symbol when the user shall refer to the instruction manual in order to protect risk of harm to the operator and to protect the apparatus against damage.
	Indicates dangerous voltages.
	Indicates a protected ground terminal.
	The apparatus is marked with this symbol when hot surfaces are available and the user should not touch it when heated up.
	Indicates flammable material used. Consult the Agilent Information Center / User Manual before attempting to install or service this equipment. Follow all safety precautions.
	Confirms that a manufactured product complies with all applicable European Community directives. The European Declaration of Conformity is available at: http://regulations.corporate.agilent.com/DoC/search.htm
	Manufacturing date.
	Product Number
	Serial Number
	Power symbol indicates On/Off. The apparatus is not completely disconnected from the mains supply when the on/off switch is in the Off position
	Pacemaker Magnets could affect the functioning of pacemakers and implanted heart defibrillators. A pacemaker could switch into test mode and cause illness. A heart defibrillator may stop working. If you wear these devices keep at least 55 mm distance to magnets. Warn others who wear these devices from getting too close to magnets.

	Magnetic field Magnets produce a far-reaching, strong magnetic field. They could damage TVs and laptops, computer hard drives, credit and ATM cards, data storage media, mechanical watches, hearing aids and speakers. Keep magnets at least 25 mm away from devices and objects that could be damaged by strong magnetic fields.
	Indicates a pinching or crushing hazard
	Indicates a piercing or cutting hazard.

WARNING

A WARNING

alerts you to situations that could cause physical injury or death.

- **Do not proceed beyond a warning until you have fully understood and met the indicated conditions.**

CAUTION

A CAUTION

alerts you to situations that could cause loss of data, or damage of equipment.

- Do not proceed beyond a caution until you have fully understood and met the indicated conditions.

Material Information

This section provides detailed information about materials used in the HPLC system and general information about solvent/material compatibility.

General Information About Solvent/Material Compatibility

Materials in the flow path are carefully selected based on Agilent's experiences in developing highest-quality instruments for HPLC analysis over several decades. These materials exhibit excellent robustness under typical HPLC conditions. For any special condition, please consult the material information section or contact Agilent.

Disclaimer

Subsequent data was collected from external resources and is meant as a reference. Agilent cannot guarantee the correctness and completeness of such information. Data is based on compatibility libraries, which are not specific for estimating the long-term life time under specific but highly variable conditions of UHPLC systems, solvents, solvent mixtures, and samples. Information also cannot be generalized due to catalytic effects of impurities like metal ions, complexing agents, oxygen etc. Apart from pure chemical corrosion, other effects like electro corrosion, electrostatic charging (especially for nonconductive organic solvents), swelling of polymer parts etc. need to be considered. Most data available refers to room temperature (typically 20 – 25 °C, 68 – 77 °F). If corrosion is possible, it usually accelerates at higher temperatures. If in doubt, please consult technical literature on chemical compatibility of materials.

MP35N

MP35N is a nonmagnetic, nickel-cobalt-chromium-molybdenum alloy demonstrating excellent corrosion resistance (for example, against nitric and sulfuric acids, sodium hydroxide, and seawater) over a wide range of concentrations and temperatures. In addition, this alloy shows exceptional

resistance to high-temperature oxidation. Due to excellent chemical resistance and toughness, the alloy is used in diverse applications: dental products, medical devices, nonmagnetic electrical components, chemical and food processing equipment, marine equipment. Treatment of MP35N alloy samples with 10 % NaCl in HCl (pH 2.0) does not reveal any detectable corrosion. MP35N also demonstrates excellent corrosion resistance in a humid environment. Although the influence of a broad variety of solvents and conditions has been tested, users should keep in mind that multiple factors can affect corrosion rates, such as temperature, concentration, pH, impurities, stress, surface finish, and dissimilar metal contacts.

Polyphenylene Sulfide (PPS)

Polyphenylene sulfide has outstanding stability even at elevated temperatures. It is resistant to dilute solutions of most inorganic acids, but it can be attacked by some organic compounds and oxidizing reagents. Nonoxidizing inorganic acids, such as sulfuric acid and phosphoric acid, have little effect on polyphenylene sulfide, but at high concentrations and temperatures, they can still cause material damage. Nonoxidizing organic chemicals generally have little effect on polyphenylene sulfide stability, but amines, aromatic compounds, and halogenated compounds may cause some swelling and softening over extended periods of time at elevated temperatures. Strong oxidizing acids, such as nitric acid (> 0.1 %), hydrogen halides (> 0.1 %), peroxy acids (> 1 %), or chlorosulfuric acid degrade polyphenylene sulfide. It is not recommended to use polyphenylene sulfide with oxidizing material, such as sodium hypochlorite and hydrogen peroxide. However, under mild environmental conditions, at low concentrations and for short exposure times, polyphenylene sulfide can withstand these chemicals, for example, as ingredients of common disinfectant solutions.

PEEK

PEEK (Polyether-Ether Ketones) combines excellent properties regarding biocompatibility, chemical resistance, mechanical and thermal stability. PEEK is therefore the material of choice for UHPLC and biochemical instrumentation.

It is stable in the specified pH range (for the Bio-Inert LC system: pH 1 – 13 , see bio-inert module manuals for details), and inert to many common solvents.

There are still some known incompatibilities with chemicals such as chloroform, methylene chloride, THF, DMSO, strong acids (nitric acid > 10 %, sulfuric acid > 10 %, sulfonic acids, trichloroacetic acid), halogens or aqueous halogen solutions, phenol and derivatives (cresols, salicylic acid, and so on).

When used above room temperature, PEEK is sensitive to bases and various organic solvents, which can cause it to swell. Under such conditions, normal PEEK capillaries are sensitive to high pressure. Therefore, Agilent uses stainless steel clad PEEK capillaries in bio-inert systems. The use of stainless steel clad PEEK capillaries keeps the flow path free of steel and ensures pressure stability up to 600 bar. If in doubt, consult the available literature about the chemical compatibility of PEEK.

Polyimide

Agilent uses semi-crystalline polyimide for rotor seals in valves and needle seats in autosamplers. One supplier of polyimide is DuPont, which brands polyimide as Vespel, which is also used by Agilent.

Polyimide is stable in a pH range between 1 and 10 and in most organic solvents. It is incompatible with concentrated mineral acids (e.g. sulphuric acid), glacial acetic acid, DMSO and THF. It is also degraded by nucleophilic substances like ammonia (e.g. ammonium salts in basic conditions) or acetates.

Polyethylene (PE)

Agilent uses UHMW (ultra-high molecular weight)-PE/PTFE blends for yellow piston and wash seals, which are used in 1290 Infinity pumps, 1290 Infinity II/III pumps, the G7104C and for normal phase applications in 1260 Infinity pumps.

Polyethylene has a good stability for most common inorganic solvents including acids and bases in a pH range of 1 to 12.5 . It is compatible with many organic solvents used in chromatographic systems like methanol, acetonitrile and isopropanol. It has limited stability with aliphatic, aromatic and halogenated hydrocarbons, THF, phenol and derivatives, concentrated acids and bases. For normal phase applications, the maximum pressure should be limited to 200 bar.

Tantalum (Ta)

Tantalum is inert to most common HPLC solvents and almost all acids except fluoric acid and acids with free sulfur trioxide. It can be corroded by strong bases (e.g. hydroxide solutions > 10 %, diethylamine). It is not recommended for the use with fluoric acid and fluorides.

Stainless Steel (SST)

Stainless steel is inert against many common solvents. It is stable in the presence of acids and bases in a pH range of 1 to 12.5 . It can be corroded by acids below pH 2.3 . It can also corrode in following solvents:

- Solutions of alkali halides, their respective acids (for example, lithium iodide, potassium chloride) and aqueous solutions of halogens.
- High concentrations of inorganic acids like nitric acid, sulfuric acid, and organic solvents especially at higher temperatures (replace, if your chromatography method allows, by phosphoric acid or phosphate buffer, which are less corrosive against stainless steel).
- Halogenated solvents or mixtures, which form radicals and/or acids, for example:

  $2\ CHCl_3 + O_2 \rightarrow 2\ COCl_2 + 2\ HCl$

  This reaction, in which stainless steel probably acts as a catalyst, occurs quickly with dried chloroform if the drying process removes the stabilizing alcohol.
- Chromatographic grade ethers, which can contain peroxides (for example, THF, dioxane, diisopropyl ether). Such ethers should be filtered through dry aluminum oxide, which adsorbs the peroxides.
- Solutions of organic acids (acetic acid, formic acid, and so on) in organic solvents. For example, a 1 % solution of acetic acid in methanol will attack steel.
- Solutions containing strong complexing agents (for example, EDTA, ethylenediaminetetraacetic acid).
- Mixtures of carbon tetrachloride with isopropanol or THF.

Titanium (Ti)

Titanium is highly resistant to oxidizing acids (for example, nitric, perchloric and hypochlorous acid) over a wide range of concentrations and temperatures. This is due to a thin oxide layer on the surface, which is stabilized by oxidizing compounds. Non-oxidizing acids (for example, hydrochloric, sulfuric and phosphoric acid) can cause slight corrosion, which increases with acid concentration and temperature. For example, the corrosion rate with 3 % HCl (about pH 0.1) at room temperature is about 13 µm/year. At room temperature, titanium is resistant to concentrations of about 5 % sulfuric acid (about pH 0.3). Addition of nitric acid to hydrochloric or sulfuric acids significantly reduces corrosion rates. Titanium is sensitive to acidic metal chlorides like $FeCl_3$ or $CuCl_2$.

Titanium is subject to corrosion in anhydrous methanol, which can be avoided by adding a small amount of water (about 3 %). Slight corrosion is possible with ammonia > 10 %.

Diamond-Like Carbon (DLC)

Diamond-Like Carbon is inert to almost all common acids, bases, and solvents. There are no documented incompatibilities for HPLC applications.

Fused Silica and Quartz (SiO_2)

Fused silica is used in Max Light Cartridges. Quartz is used for classical flow cell windows. It is inert against all common solvents and acids except hydrofluoric acid and acidic solvents containing fluorides. It is corroded by strong bases and should not be used above pH 12 at room temperature. The corrosion of flow cell windows can negatively affect measurement results. For a pH greater than 12, the use of flow cells with sapphire windows is recommended.

Gold

Gold is inert to all common HPLC solvents, acids, and bases within the specified pH range. It can be corroded by complexing cyanides and concentrated acids like aqua regia.

Zirconium Oxide (ZrO_2)

Zirconium Oxide is inert to almost all common acids, bases, and solvents. There are no documented incompatibilities for HPLC applications.

Platinum/Iridium

Platinum/Iridium is inert to almost all common acids, bases, and solvents. There are no documented incompatibilities for HPLC applications.

Fluorinated Polymers (PTFE, PFA, FEP, FFKM, PVDF)

Fluorinated polymers like PTFE (polytetrafluorethylene), PFA (perfluoroalkoxy), and FEP (fluorinated ethylene propylene) are inert to almost all common acids, bases, and solvents. FFKM is perfluorinated rubber, which is also resistant to most chemicals. As an elastomer, it may swell in some organic solvents like halogenated hydrocarbons.

TFE/PDD copolymer tubings, which are used in all Agilent degassers except G1322A/G7122A, are not compatible with fluorinated solvents like Freon, Fluorinert, or Vertrel. They have limited life time in the presence of hexafluoroisopropanol (HFIP). To ensure the longest possible life with HFIP, it is best to dedicate a particular chamber to this solvent, not to switch solvents, and not to let dry out the chamber. For optimizing the life of the pressure sensor, do not leave HFIP in the chamber when the unit is off.

The tubing of the leak sensor is made of PVDF (polyvinylidene fluoride), which is incompatible with the solvent DMF (dimethylformamide).

Sapphire, Ruby, and Al_2O_3-Based Ceramics

Sapphire, ruby, and ceramics based on aluminum oxide Al_2O_3 are inert to almost all common acids, bases, and solvents. There are no documented incompatibilities for HPLC applications.

At-a-Glance Details About Agilent Capillaries

The following section provides useful information about Agilent capillaries and its characteristics.

Syntax for capillary description

Type - Material - Capillary dimensions - Fitting Left/Fitting right

Table 32: Example for a capillary description

Code provided with the part	Meaing of the code
Color code:	Material of the product is MP35N, the inner diameter is 0.20 or 0.25 mm
Capillary	The part is a connection capillary
MP35N	Material of the part is MP35N
0.25 x 80 mm	The part has an inner diameter of 0.25 mm and a length of 80 mm
SI/SI	Left fitting: Swagelok + 1.6 mm Port id, Intermediate Right fitting: Swagelok + 1.6 mm Port id, Intermediate

To get an overview of the code in use, see

- Color: Table 33 on page 414
- Type: Table 34 on page 414
- Material: Table 35 on page 415
- Dimension: Table 36 on page 415
- Fittings: Table 37 on page 416

Color Coding Guide

Table 33: Color-coding key for Agilent capillary tubing

Internal diameter in mm		Color code
0.015		Orange
0.025		Yellow
0.05		Beige
0.075		Black
0.075	MP35N	Black with orange stripe
0.1		Purple
0.12		Red
0.12	MP35N	Red with orange stripe
0.17		Green
0.17	MP35N	Green with orange stripe
0.20 /0.25		Blue
0.20 /0.25	MP35N	Blue with orange stripe
0.3		Grey
0.50		Bone White

NOTE As you move to smaller-volume, high efficiency columns, you'll want to use narrow id tubing, as opposed to the wider id tubing used for conventional HPLC instruments.

Abbreviation Guide for Type

Table 34: Type (gives some indication on the primary function, like a loop or a connection capillary)

Key	Description
Capillary	Connection capillaries
Loop	Loop capillaries
Seat	Autosampler needle seats

Key	Description
Tube	Tubing
Heat exchanger	Heat exchanger

Abbreviation Guide for Material

Table 35: Material (indicates which raw material is used for the capillary)

Key	Description
ST	Stainless steel
Ti	Titanium
PK	PEEK
FS/PK	PEEK-coated fused silica [10]
PK/ST	Stainless steel-coated PEEK [11]
PFFE	PTFE
FS	Fused silica
MP35N	Nickel-cobalt-chromium-molybdenium alloy

Abbreviation Guide for Capillary Dimensions

Table 36: Capillary dimensions (indicates inner diameter (id), length, and volume of the capillary)

Description
id (mm) x Length (mm)
Volume (µL)

10 Fused silica in contact with solvent

11 Stainless steel-coated PEEK

Abbreviation Guide for Fitting Left/Fitting Right

Table 37: Fitting left/fitting right (indicates which fitting is used on both ends of the capillary)

Key	Description
W	Swagelok + 0.8 mm Port id
S	Swagelok + 1.6 mm Port id
M	Metric M4 + 0.8 mm Port id
E	Metric M3 + 1.6 mm Port id
U	Swagelok union
L	Long
X	Extra long
H	Long head
G	Small head SW 4
N	Small head SW 5
F	Finger-tight
V	1200 bar
B	Bio
P	PEEK
I	Intermediate

Waste Electrical and Electronic Equipment (WEEE) Directive

This product complies with the European WEEE Directive marking requirements. The affixed label indicates that you must not discard this electrical/electronic product in domestic household waste.

NOTE

Do not dispose of in domestic household waste
To return unwanted products, contact your local Agilent office, or see https://www.agilent.com for more information.

Radio Interference

Cables supplied by Agilent Technologies are screened to provide optimized protection against radio interference. All cables are in compliance with safety or EMC regulations.

Test and Measurement

If test and measurement equipment is operated with unscreened cables, or used for measurements on open set-ups, the user has to assure that under operating conditions the radio interference limits are still met within the premises.

RFID Statement

Brasil

Este equipamento não tem direito à proteção contra interferência prejudicial e não pode causar interferência em sistemas devidamente autorizados. Para mais informações, consulte o site da Anatel: https://www.gov.br/anatel/pt-br.

Este produto não é apropriado para uso em ambientes domésticos, pois poderá causar interferências eletromagnéticas que obrigam o usuário a tomar medidas necessárias para minimizar estas interferências.

Canada

Statement according to RSS GEN Issue 5:

This device contains licence-exempt transmitter(s)/receiver(s) that comply with Innovation, Science and Economic Development Canada's licence-exempt RSS(s). Operation is subject to the following two conditions:

1. This device may not cause interference
2. This device must accept any interference, including interference that may cause undesired operation of the device.

Cet appareil contient des émetteurs / récepteurs exemptés de licence conformes aux RSS (RSS) d'Innovation, Sciences et Développement économique Canada. Le fonctionnement est soumis aux deux conditions suivantes:

1. Cet appareil ne doit pas causer d'interférences
2. Cet appareil doit accepter toutes les interférences, y compris celles susceptibles de provoquer un fonctionnement indésirable de l'appareil.

Mexico

La operación de este equipo está sujeta a las siguientes dos condiciones:

1. es posible que este equipo o dispositivo no cause interferencia perjudicial y
2. este equipo o dispositivo debe aceptar cualquier interferencia, incluyendo la que pueda causar su operación no deseada.

Thailand

This telecommuinication equipment conforms to NTC/NBTC technical requirement.

USA

1. User Information according to FCC 15.21:Changes or modifications not expressly approved by the party responsible for compliance could void the user's authority to operate the equipment.
2. Part 15 Statement according to FCC 15.19:

   This device complies with Part 15 of the FCC Rules. Operation is subject to the following two conditions:

   - This device may not cause interference.
   - This device must accept any interference, including interference that may cause undesired operation.

CAUTION

Do not change or modify the equipment.

Changes or modifications not expressly approved by Agilent could void your authority to operate the equipment.

NOTE

This equipment has been tested and found to comply with the limits for a Class A digital device, pursuant to part 15 of the FCC Rules.

These limits are designed to provide reasonable protection against harmful interference when the equipment is operated in a commercial environment. This equipment generates, uses, and can radiate radio frequency energy and, if not installed and used in accordance with the instruction manual, may cause harmful interference to radio communications. Operation of this equipment in a residential area is likely to cause harmful interference in which case the user will be required to correct the interference at his own expense.

Table 38: Operating frequencies and maximum power levels

Technology	Operating Frequencies/ Bands	Maximum Transmit Power Level
RFID	125 kHz	26.8 dBm

Sound Emission

Sound Pressure

Sound pressure Lp < 70 db(A) according to DIN EN ISO 7779

Schalldruckpegel

Schalldruckpegel Lp < 70 db(A) nach DIN EN ISO 7779

Agilent Technologies on Internet

For the latest information on products and services visit our worldwide web site on the Internet at:

https://www.agilent.com

In This Book

This manual contains technical reference information about the Agilent 1260 Infinity III Vialsamplers (G7129A, G7129C) and the Agilent 1290 Infinity III Vialsampler (G7129B).

The manual describes the following:

- Introduction,
- site requirements and specifications,
- using the module,
- optimizing performance,
- troubleshooting and diagnostics,
- error information,
- maintenance,
- parts and materials,
- hardware information,
- LAN configuration,
- safety and related information.

www.agilent.com

© Agilent Technologies Inc. 2015-2024
Edition: 10/2024

Document No: SD-29000242 Rev. G