Electric bedside Sleeper

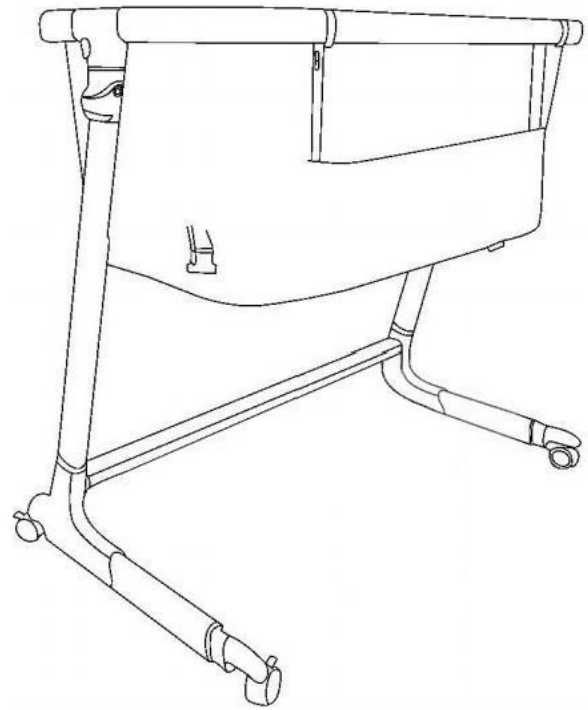

IMPORTANT!
Read all instructions before assembling and using the product. Keep instructions for future use.

User's Instructions

Warning!Before using this product,please carefully read this instruction manual and preserve it properly for reference.If it is not operated in accordance with this manual,it may affect the safety of children.

Specifications:

Product name:Electric bedside sleeper Product model:B001

Age suitability:Birth to approx.5 months Weigh: 7.5kgs

Weigh limit: 9kgs(19.8lbs)

Execution standard:ASTM F2906-23/16 CFR1222
ASTM F2194-22E1/16 CFR1218

Company Name:

Contents

Product lis ---------- 1-2

The assembly rules ---------- 3-5

Clean maintenance ---------- 6-9

Use instructions ---------- 10-23

Precautions ---------- 24-28

■1 Product list

Drawings	Name	Quantity
	Main frame	1 pc
	Bed body	1 pc
	Fixed tube	1 pc
	Six -star handle screw	4 pc
	Mattress	1 pc
	“co-sleeper”belt	2 pc
	Adapter	1 pc
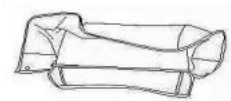	Bed body	1 pc
Manual		1 pc

Warning! This product can only be assembled by adults.

Product assembly

Step 1.Rotate the left and right brackets outward,and then turn the rack 90 degrees to place the left bracket or the right bracket on the ground.As shown below

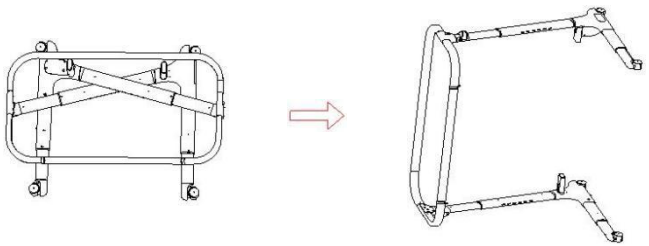

Step 2.The fixed pipe is aimed atthe raised part of the left and right brackets,and then press it from top to bottom to connect the fixed pipe to the left and right brackets.As shown below

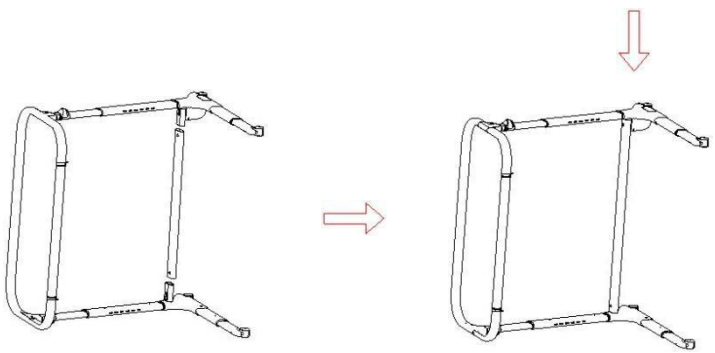

Step 3.Lock the plum screw on both sides ofthe fixedpipe.As shown below

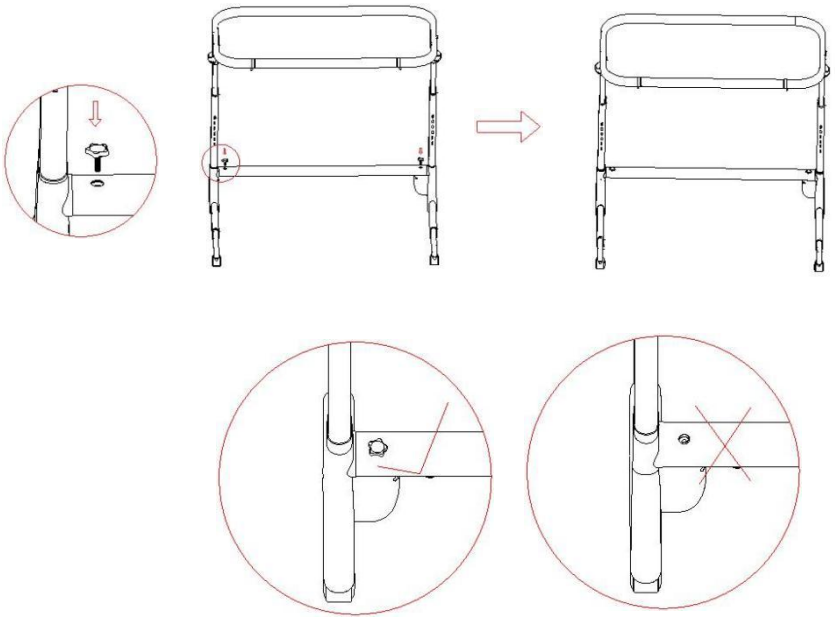

■ Assembly rules

Step 4.Pull the straight zipper in front of the bed.As shown below

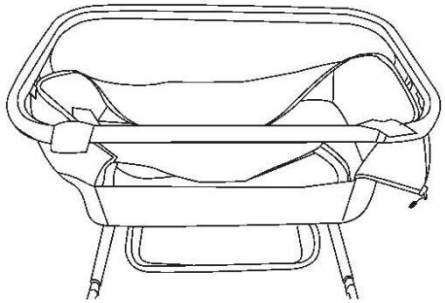

Step 5.Putting the bed body left,the right boom is the same as the holes under the shelf as the shadow shape,and the card indicates the card in place.

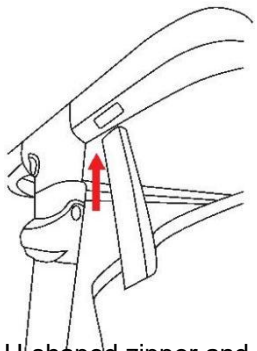

Step 6.Then pull up the U-shaped zipper and buckle the two four -fold buckle on the side of the bed.As shown below

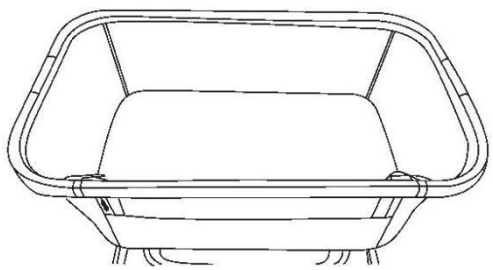

■ Maintenance and cleanliness

Bed body software:

The internal filling is hard resin cotton;removed and scrubbed with clean cold water.Bed pad:The inner filling is a sponge,the outer software can be removed, scrubbing with clean cold water.

Assembly of bed body software

Step 1.Turn the boom on both sides of the assembly bed to turn about 180 degrees to the bottom of the bed

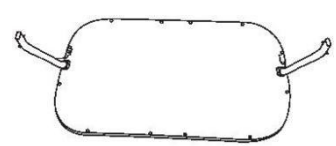

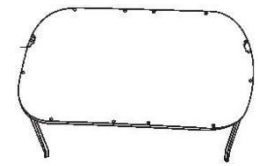

Step 2.Put the sides of the boom on both sides through the two holes on the bottom of the inside,and then wear it out of the opening on the top of the outside

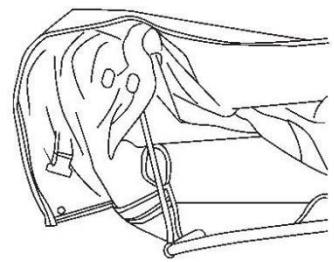

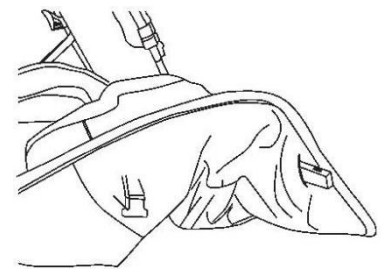

■ Maintenance and cleanliness

Step 3.Put the sides of the boom on both sides through the two holes on the bottom of the inside,and then wear it out of the opening on the top of the outside

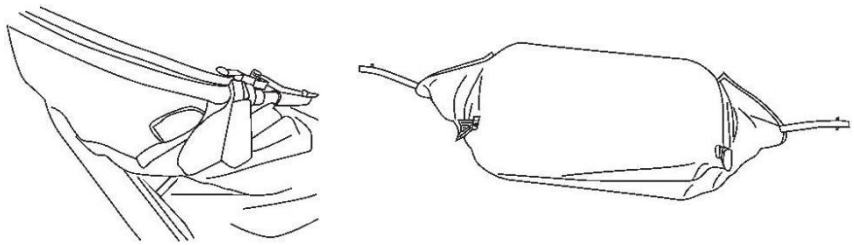

Step 4.Then turn the bed body,put the cover on both sides of the cloth on the fiber plate,and complete the software assembly

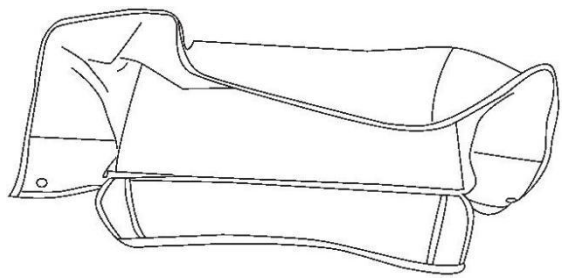

■Disassembling of bed body software

Step 1.Turn the booming arm on both sides of the bed to about 180 degrees backwards

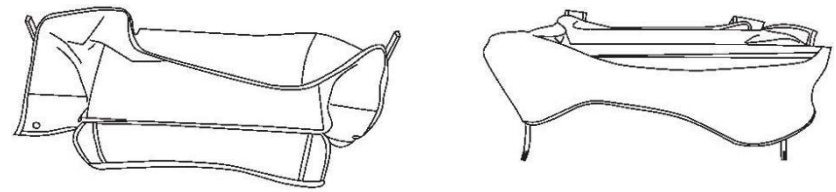

Step 2.Remove the software from the bed

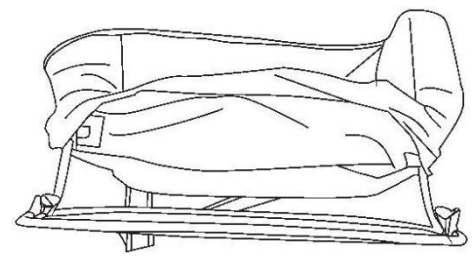

■Disassembling of bed body software

Basic maintenance:

Always check parts regularly for tightness bolts,nuts and other fasteners-tighten or replace if required.

Check the strength of the fabric covers from time to time.Defective or worn parts must be replaced;as should components which are broken,torn,defective or worn out. Use only parts and accessories approved by the manufacturer.

No.	The problem that may occur	solution
1	No electronic function	check whether the adapter is turned on
2	No swing	Whether to unpress the positioning function of the bed and bottom of the bed
3	Only bright power lamps	Please lightning a power switch
4	Swing is not smooth	Please check whether the height on both sides of the bed body is consistent
5	The product moves when the swing is swinging	Please check whether the 4 foot wheels brake

■ Maintenance and cleanliness

Control panel function introduction:

Step 3.Lock the plum screw on both sides of the fixed pipe.As shown below

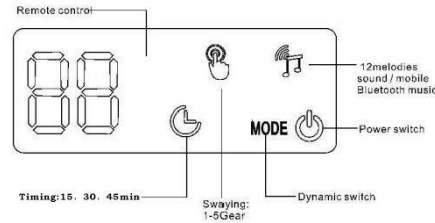

After connecting the power,only the power lamp is on.

1 After the power is turned on, only the power light is on. Power switch: Press one time, and all the display lights will turn on. After 5 minutes without operating the panel, it will be in the state of the screen (only the power light will turn on, swing, and music can be played)

2 Timing buttons: Press once for 15 minutes, press the second for 30 minutes, press the third for 45 minutes, set when the time is over, it is in standby state

3.Music buttons: Press once to play music, press second to pause, long press to display volume from 1-10 and then from 10-1 Level change, when released, display which number is the same levels of voice, 8 chord tone and 4 white noise.Under normal conditions, the product comes with music, and the phone is automatically connected to the phone after the Bluetooth is turned on To play mobile music; The Bluetooth name is WS-HB18.

4.Gear buttons:press once, one gear swing; press twice, swing in second gear; Press three times, swing three gears; press four times, fourth swing; press five times, fifth gear swing; press six times to turn off the swing.

5.Mode dynamic button: Press to start dynamic: After feeling shaking, start a first gear swing, start a level 2 volume sound , activate the 15-minute timer.

6.Dynamic button: The mode switch is the dynamic function switch, press it to open: the digital display will display blinking "1",when the motion is activated: the flashing "1" will become a non-blinking "1", 1 swing, while the music is played (level 2 volume) and timed for 15 minutes; After 15 minutes, it will enter the flashing "1" mode again, and turn off the motion when the mode key is pressed again

Instructions for remote control:

Step 5.Putting the bed body left,the right boom is the same as the holes under the shelf as the shadow shape,and the card indicates the card in place.

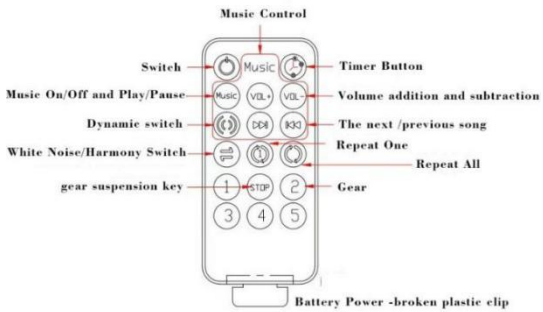

Instructions for use:

After connecting the power,only the power lamp is on.

1 After the power is turned on, only the power light is on. Power switch: Press one time, and all the display lights will turn on. After 5 minutes without operating the panel, it will be in the state of the screen (only the power light will turn on, swing, and music can be played)

2 Timing buttons: Press once for 15 minutes, press the second for 30 minutes, press the third for 45 minutes, set when the time is over, it is in standby state

3 Music buttons: Press once to play music, press second to pause, long press to display volume from 1-10 and then from 10-1 Level change, when released, display which number is the same levels of voice, 8 chord tone and 4 white noise.Under normal conditions, the product comes with music, and the phone is automatically connected to the phone after the Bluetooth is turned on to play mobile music; The Bluetooth name is WS-HB18.

4 Gear buttons:press once, one gear swing; press twice, swing in second gear; Press three times, swing three gears; press four times, fourth swing; press five times, fifth gear swing; press six times to turn off the swing.

5 Dynamic button: Press to start dynamic: After feeling shaking, start a first gear swing, start a level 2 volume sound , activate the 15-minute timer.

CAUTION!

To prevent battery leaks, which can burn skin and eyes:
Remove batteries when storing product for a long time.Dispose of used batteries immediately.

Adapter: If you have this accessory,press the following method.

1) Insert the DC plug of the adapter into the power DC interface,and then insert AC plug into the ac plugs at 100-240V50/60Hz0.3A.Please unplug the ac plug when stopping use.As shown below

2)When using the battery,insert the power DC joint mother into the battery box hole (the position of the arrow referred to).When not in use for a long time,please unplug the power connector.

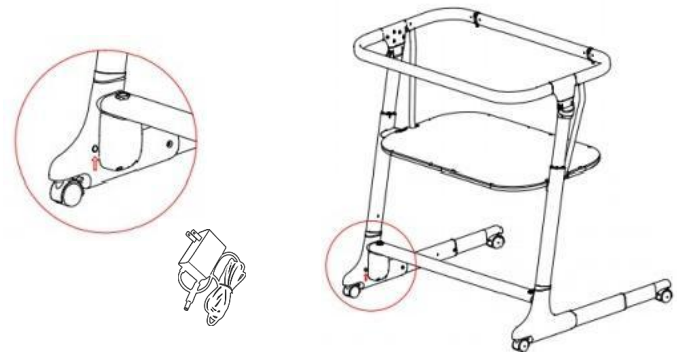

Warning!

·The power supply terminal must not be short

·It is forbidden to use the adapter provided by this product to power the product.The input voltage of the adapter is 100-240V150/60Hz 0.3A.The output voltage is 5.5-6V≤800mA.

·When using an adapter,let the adapter stay away from children.

·The adapter used by the bed should be regularly checked in the rope socket, attachment,and other parts.If any damage should be stopped.

· If you don't need to unplug the power for a long time,don't play the adapter to the baby.

■Product mode description

bedside sleeper mode:
Step 5.Putting the bed body left,the right boom is the same as the holes under the shelf as the shadow shape,and the card indicates the card in place.

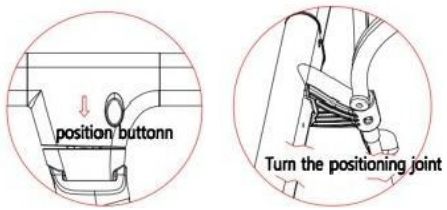

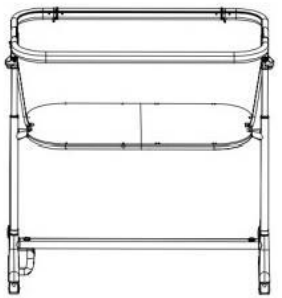

Bed side sleeper mode:

1 Pressing the position button press down,hear the 'dick,the joints are not rotated

2 Tum the positioning joint from the bottom of the bed to the outside and the bracket pipes on the left and right sides,stop of hearing "Click to the rotation

DO NOT use bedside sleeper if any parts are missing, damaged, or broken. Contact manufacturer for replacement parts and instructional literature if needed. DO NOT substitute parts.

Always read and follow assembly instructions for each product use mode (bedside sleeper, bassinet and cradle swing).

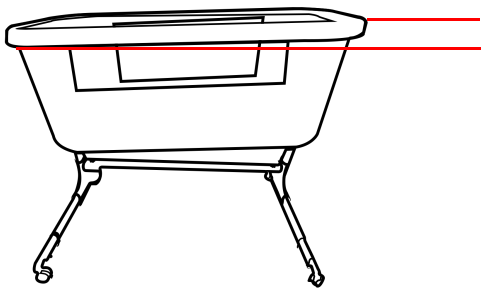

This height difference is no more than 2.24 inch

Warning! The height difference between the head end and foot end should NEVER be more than two height level.

■Product mode description

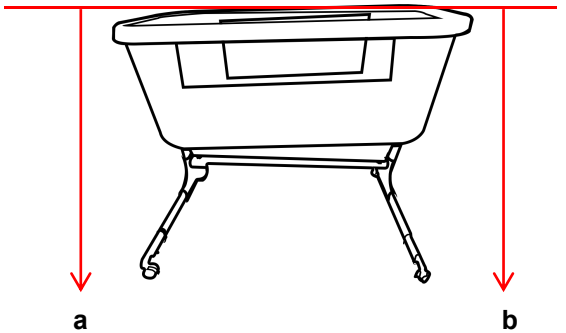

a=b

WARNING!

Ensure that the height on both sides of the crib is evenly matched when operating in cradle swing mode. If the sides are not of equal height, the cradle swing mode cannot be used. It is essential to adjust the crib sides to the same level to activate and safely use the cradle swing feature.

Electric swing bed mode

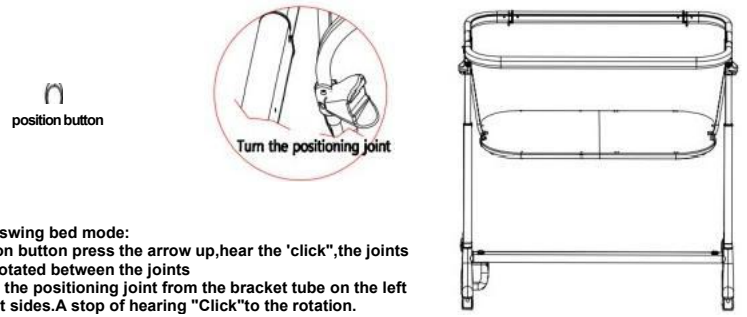

Electric swing bed mode:
1 Position button press the arrow up,hear the 'click",the joints can be rotated between the joints
2 Rotate the positioning joint from the bracket tube on the left and right sides.A stop of hearing "Click"to the rotation.

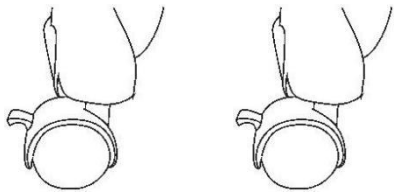

●In electric swing bed mode,wheel is locked

WARNING!

Before operating the cradle swing mode, detach the bedside sleeper's fixed straps and place them in a secure location where children cannot access them.

Failure to do so could pose a risk of entanglement or choking to young children.

Always ensure the safety of your child by keeping these straps out of their reach when the cradle swing is in use.

Height adjustment function:

As shown in the figure,press the adjust button on both sides,and then adjust it up or down.The position height is 7 stages,When you want to adjust the height,the pawn bodies with both hands are balanced and keep the seats on both sides of the seats on both sides.At the same height,until I heard the sound of"click".

Warning! The seat adjustment button must be played back.If you find that there is no one side of the bed body,it is not fixed,loose or unable to play,please use it after fixing.The bed body on both sides must be fixed to keep the bed specified. Otherwise there will be danger!

Warning! The height difference between the head end and foot end should NEVER be more than two height level.

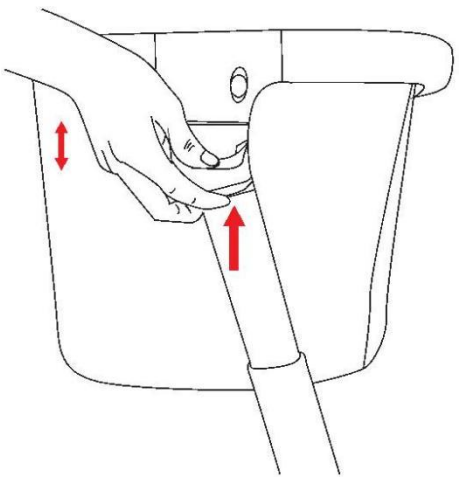

■Measure Bed Height &Crib Height Setup

1.Measure bed height
2.Adjust crib to correct level by pulling up on the hand-held button
3.Ensure the crib sidewall closest to the bed is not higher than the mattress
4.Ensure the crib is horizontal so both numbers on the arms are the same and the crib is not in incline mode
WARNING:To avoid death from the infant's neck being caught on the top rail on the side that is next to the adult bed,the top rail must be no higher than the adult mattress.ALWAYS raise the side when not fastened to the adult bed.

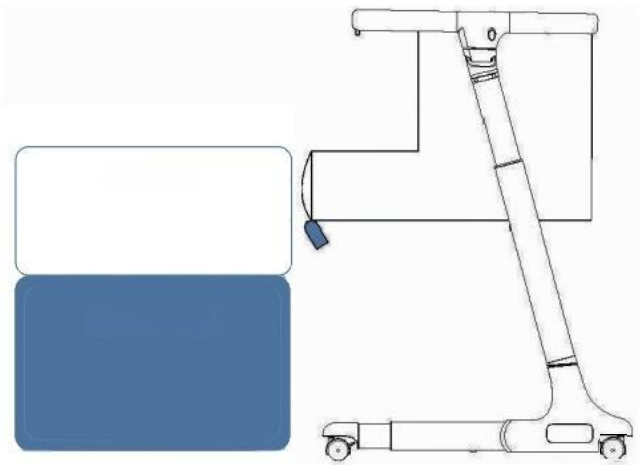

Recommended Ground To Mattress Height
L7-31.7
L6-30.5
L5-29.3
L4-28.1
L3-26.9
L2-25.7
L1-24.5
If your mattress is below 23.5”do not use product as the mattress must be at least 1”higher than the side opening.

■Measure Bed Height&Crib Height Setup

Front feet telescopic function:
Press one hand up to adjust the iron sheet,and the other hand moves out of the forefoot with a wheels inward,and when you hear the "card",it means that you are adjusted to the other position.As shown below

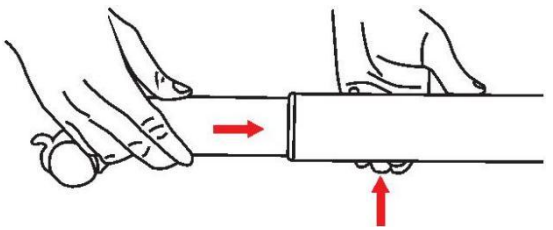

Co-Sleeper(Fixed to Bed)

Step 1.Plague side enclosure and disassembly function
Disassemble the two-side buckle on the second side of the bed,as shown in the figure below

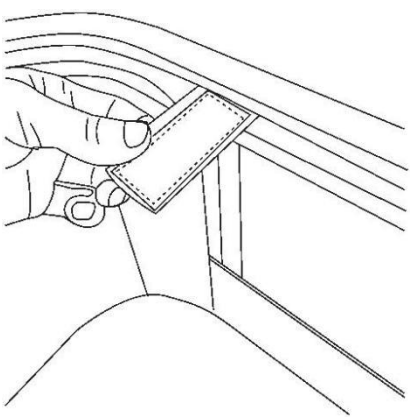

■Co-Sleeeper(Flxed to Bed)

Pushing the fast disassembly button on the lower side of the bedside tube,the middle circum ference tube is pressed down,and the other side is also operated.

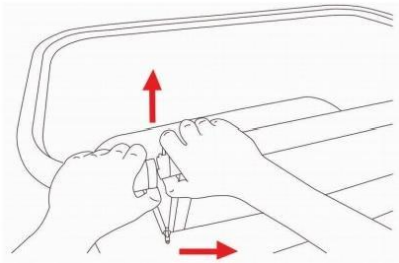

The side bed is open state

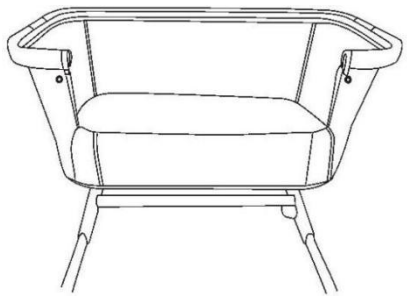

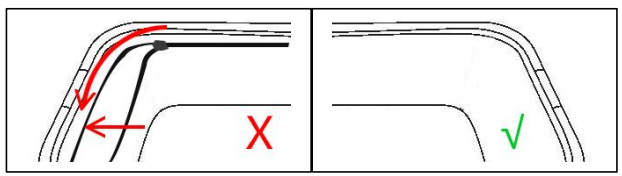

WARNING!When using the bassinet mode, all zippers must be fully closed and zipper openings completely sealed. Partially opened zippers can create hazardous openings. Ensure all zippers are securely fastened before use.

■Co-Sleeeper(Flxed to Bed)

Step 2.Attach the two clips on the “co-sleeper”belt(D)as the arrow show to the two buckles on the underside of the crib.

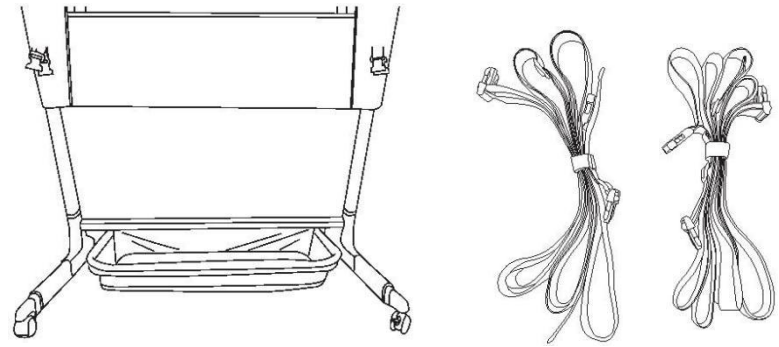

WARNING!To avoid death from the infant's neck being caught on the top edge on the side that is next to the adult bed,the top edge next to the adult mattress **MUST BE NO HIGHER** than the adult mattress.
WARNING!Always raise the drop side when not fastened to an adult bed.

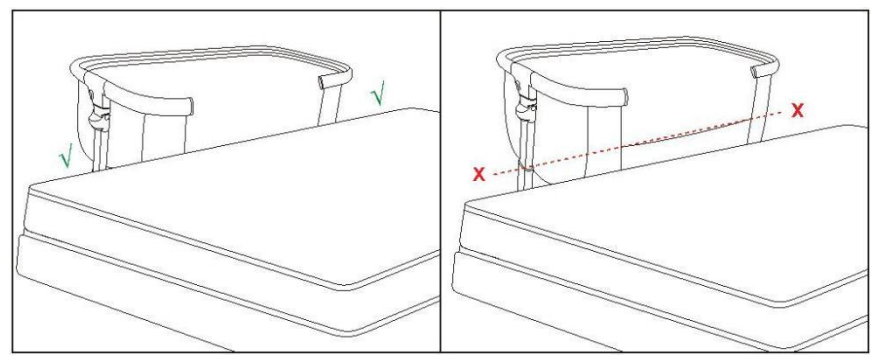

■Co-Sleeper (Fixed to Bed)

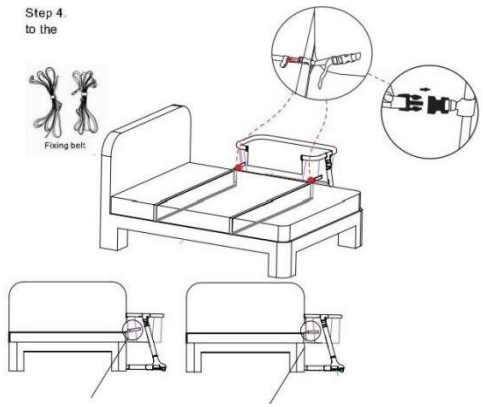

Ribbon tilt error Ribbon level correct

1. Place the bedside crib in a suitable position next to the bed and step on the four wheels brakes.
2. Adjust the height to be level with the bed.
3. Take out the fixing belt.
4. There are two connecting buckles on the bottom frame of bedside crib. Please tie the bed with fixing belt and fasten the buckles and make sure they are secured.

⚠ WARNING

Entrapment Hazard- To prevent death from entrapment, bedside sleeper must be properly secured to adult bed using the attachment straps.

- There must be no more than 1/2 Inch (13mm) gap between bedside sleeper and adult bed.
- Check tightness before each use by pulling bedside sleeper in a direction away from adult bed.
- If gap exceeds 1/2 inch (13mm), DO NOT use product. Do not fl the gap with pillows, blankets or other items that are suffocation hazards.

The attachment strap must always be used in bedside sleeper mode.

Step 5.Tighten the "co-sleeper"belt ensuring there is no gap between the adult bed and the bedside crib.

NOTE.Check tightness of the"co-sleeper"belt by pulling the bedside crib away from the adult bed.

■Co-Sleeper(Fixed to Bed)

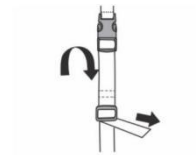

WARNING! Entrapment hazard -to prevent death from entrapment,the bedside crib must be properly secured to the adult bed using the "co-sleeper"belt.

WARNING!There must be no more than 13mm gap between the bedside crib and the adult bed.

WARNING! if gap exceeds 13mm **DO NOT** use the product.**DO NOT** fill the gap with pillows,blankets or other items that are suffocation hazards.

WARNING!Both clips on the attachment strap MUST be attached to the crib when in co-sleeper mode.If one clip is broken or will not attach to the crib-**DO NOT** use the crib in co-sleeper mode until you have replaced the"co-sleeper"belt.

Caution: This product is not suitable for use in conjunction with children ’s beds, foldable beds, or any other beds with unstable structures. For the safety of your child, do not use this product with beds that do not meet stability requirements.

Mattress,Boxsprongs &Frame aligned

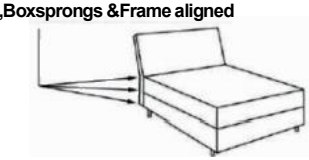

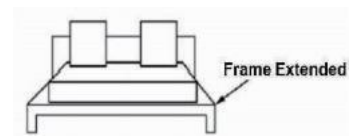

ACCEPTABLE BEDFRAME IN-LINE MATTRESS,BOXSPRING &FRAME NOT IN-LINE

UNACCEPTABLE BED,

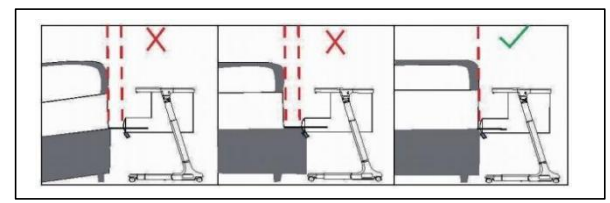

Warning! This product is not compatible with beds that have an inclined angle or where the mattress size does not match the bed frame size. Do not install or use this product with an unacceptable bed configuration as it may lead to instability or safety hazards. Ensure the bed is flat and the mattress fits properly before using this product.

■Detaching Crib from Adult Bed

WARNING!NEVER attempt to detach the crib from an adult bed whilst the child is in the crib.

Step 1.Unfasten the“co-sleeper“belt from the two buckles on the underside of the crib.

NOTE.You can leave the "co-sleeper"belt under the adult mattress if you prefer not to keep feeding it under the adult mattress each time you come to attach the crib.

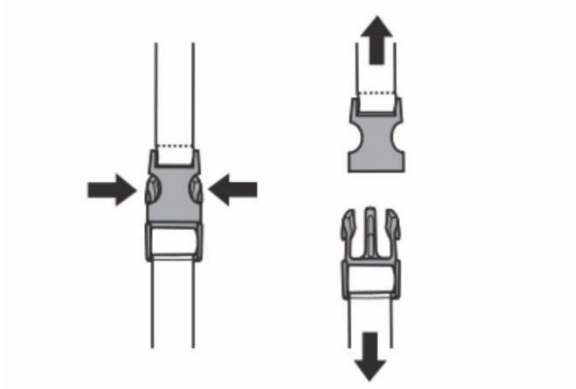

Step 2.Lift the side rail,slide it into place ensuring it'clicks'into position.

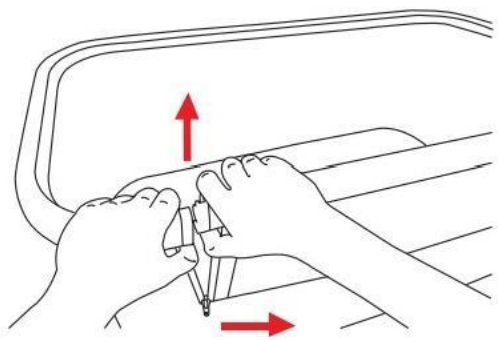

Warning!When adjusting the function of the bedside bed,you must first let the baby leave the bedside bed and prohibit swing.

⚠WARNING

Failure to follow these warnings and the instructions could result in serious injury or death.
FALL HAZARD-To help prevent falls, do not use this product when the infant begins to push up on hands and knees or has reached ZHONGSHAN OLD CAPTAIN DAILY PRODUCTS CO.,ltd whichever comes first.

SUFFOCATION HAZARD

INFANTS HAVE SUFFOCATED:

- In gaps between extra padding and side of the bassinet cradle and on soft bedding.
- Use only the pad provided by manufacturer.
- NEVER add a pillow, comforter, or another mattress for padding.

- To reduce the risk of SLDS, pediatricians recommend healthy infants be placed on their backs to sleep, unless otherwise advised by your physician.
- If a sheet is used with the pad, use only the one provided by the bassinet or cradle manufacturer or one specifically designed to fit the dimension of the bassinet or cradle mattress.

⚠ WARNING

⚠ WARNING

Read all instructions before assembling and using the product.

Keep instructions for future use.

Always read and follow assembly instructions for each product use mode (bedside sleeper,bassinet).

Assemble product according to manufacturer's instruction for ANY use mode- bedside sleeper as well as the bassinet modes,or both.

This bedside sleeper is designed for use only with adult beds that between 24.5 and 31.7 inches from floor to top of adult mattress.

A bedside sleeper is designed to provide a sleeping area for an infant until he or she begins to push up on hands and knees or approximately 5 months of age.Move your child to another sleeping product when your child reaches this stage.

⚠ WARNING

⚠ WARNING

•A bedside sleeper is designed to provide a sleeping area for an infant until he or she begins to push up on hands and knees or approximately 5 months of age. Move your child to another sleeping product when your child reaches this stage.

⚠ WARNING

Entrapment Hazard— To prevent Death from entrapment, bedside sleeper must be properly secured to adult bed using the attachment system.

(1) There must be no more than 1/2 in.(13 mm) gap between bedside sleeper and adult bed.

(2) Check tightness before each use by pulling bed side sleeper in a direction away from adult bed.

(3) If gap exceeds 1/2 in.(13 mm), DO NOT use product.

Do not fill the gap with pillows, blankets or other items that are suffocation hazards.

⚠ WARNING

•This bedside sleeper is designed for use only with adult beds that between24.5and31.7inches from floor to top of adult mattress.

⚠ WARNING

•To avoid death from the infant's neck being caught on the top rail on the side that is next to the adult bed,the top rail must be no higher than the adult bed mattress.

⚠ WARNING

•Always read and follow manufacturers assembly instruction for each product use mode(bedside sleeper and bassinet)

⚠ WARNING

•Always use ALL reguired parts for each use mode. Check instruction manual for a list of required parts. Periodically check product for loose, damaged or missing parts.

⚠ WARNING

⚠ WARNING

To avoid death from the infant's neck being caught on the top rail on the side that is next to the adult bed,the lowered portion of the top rail must be no higher than the adult bed mattress.

The attachment system must ALWAYS be used in bedside sleeper mode.

Strings can cause strangulation !Do not place items with a string around a child's neck,such as hood strings or pacifier cords.Do not suspend strings over a bassinet or cradle or attach strings to toys.

KEEP AWAY FROM FIRE!

⚠ WARNING

The type adult beds (BELOW fig) with which the bed side sleeper CAN OR CAN NOT BE USED

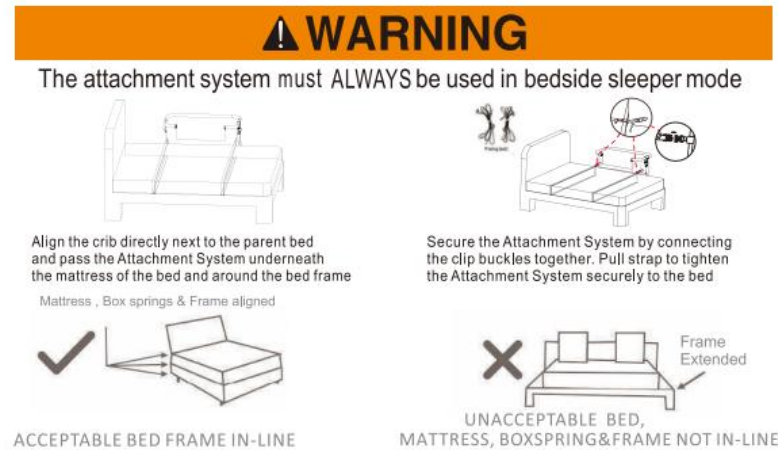

Not suitable for use next to water beds or children's beds

- Let the bedside crib toward to adult's bed.
- Connect the bedside crib and adult's bed with strap,the strap have to place between mattress and frame of adult's bed.

⚠ WARNING

- When using the bedside bed function,the drop side rail that must be removed and kept well.

⚠ WARNING

- When fixing the bedside bed,the short guardrail edge must be closely fitted with the adult mattress to avoid any gap.
- The bedside sleeper can be used for aligned adult bed only.

■Disassembling of bed body software

Caution: The user is cautioned that changes or modifications not expressly
approved by the party responsible for compliance could void the user's
authority to operate the equipment.

This device complies with Part 15 of the FCC Rules. Operation is subject to the following two conditions: (1) this device may not cause harmful interference, and (2) this device must accept any interference received, including interference that may cause undesired operation.

NOTE: This equipment has been tested and found to comply with the limits for a Class B digital device, pursuant to Part 15 of the FCC Rules. These limits are designed to provide reasonable protection against harmful interference in a residential installation. This equipment generates, uses and can radiate radio frequency energy and, if not installed and used in accordance with the instructions, may cause harmful interference to radio communications. However, there is no guarantee that interference will not occur in a particular installation.
If this equipment does cause harmful interference to radio or television reception, which can be determined by turning the equipment off and on, the user is encouraged to try to correct the interference by one or more of the following measures:
-- Reorient or relocate the receiving antenna.
-- Increase the separation between the equipment and receiver.
-- Connect the equipment into an outlet on a circuit different from that to which the receiver is connected.
-- Consult the dealer or an experienced radio/TV technician for help.

FCC Radiation Exposure Statement
This equipment complies with FCC radiation exposure limits set forth for an uncontrolled environment.
This transmitter must not be co-located or operating in conjunction with any other antenna or transmitter.

■Disassembling of bed body software