2.4GHz 1608 Chip Antenna: RANT1608F245C01/1608F245C04/1608F245C05

Application:

WLAN, 802.11b/g, Bluetooth, WLAN, etc…

Features

SMD, high reliability, ultra Impact, Omni-directional…

Part number Information

RANT	1608	F	245	C	01/04
(A)	(B)	(C)	(D)	(E)	(F)

(A)Product Type	Chip Antenna
(B) Size Code	1.6x0.8mm(±0.1mm)
(C) Material	High K material
(D) Frequency	2.4 ~ 2.5GHz
(E) Feeding mode	PIFA & Single Feeding
(F) Antenna type	Type=01/04/05

Electrical Specification

Working Frequency Range	2400 ~2500 MHz
Bandwidth	120 MHz (Min.)
Peak Gain	2.7 dBi (Typ.)
Impedance	50 Ohm
Return loss	10 dB (Min)
Polarization	Linear
Azimuth Beamwidth	Omni-directional
Operation Temperature(℃)	-40 ~85℃
Resistance to Soldering Heats	10sec. (@ 280℃)
Termination	Ni / Au (Leadless)

Dimension and Terminal Configuration

Mechanical Dimensions

	In	mm
L	0.126 ± 0.008	3.20 ± 0.20
W	0.063 ± 0.008	1.60 ± 0.20
T	0.051 +.004/-.008	1.30 +0.1/-0.2
a	0.020 ± 0.012	0.50 ± 0.30

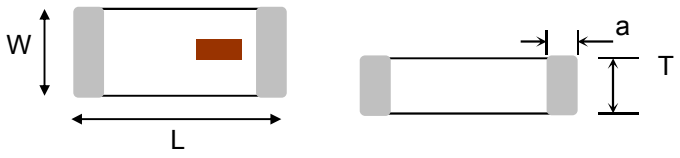

OpenMV, LLC
6595 Roswell Road Ste G, PMB 22900, Atlanta, GA 30328

2.4GHz 1608 Chip Antenna:
RANT1608F245C01/1608F245C04/1608F245C05

Evaluation Board Reference

Top layer:

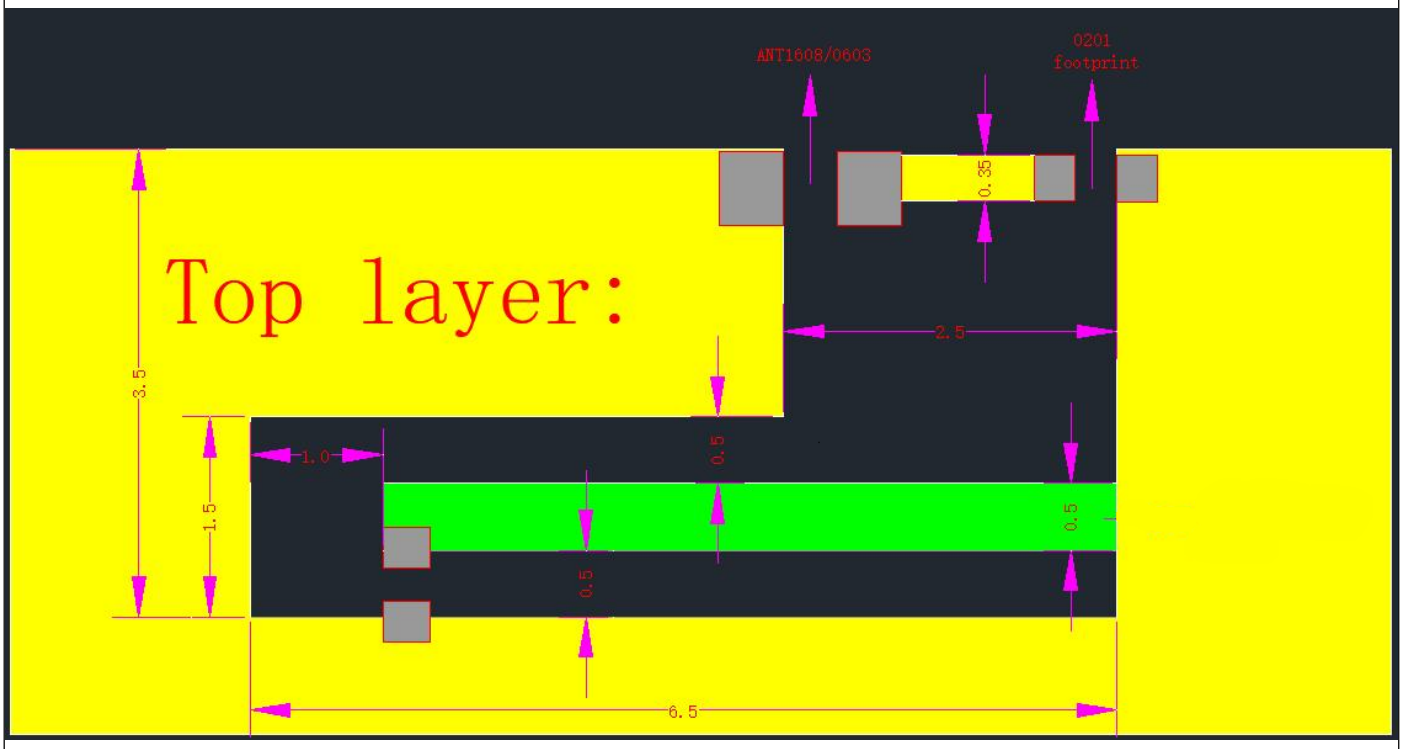

Bottom layer:

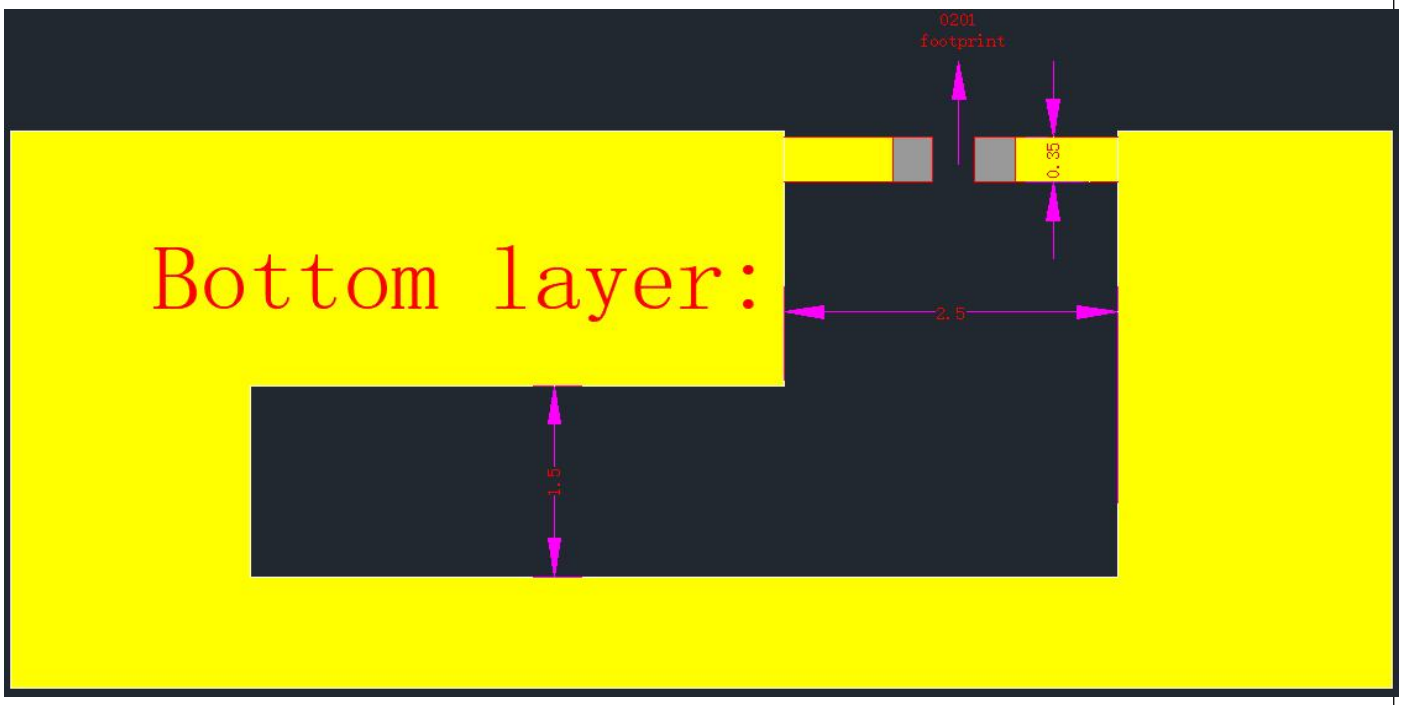

2.4GHz 1608 Chip Antenna:
RANT1608F245C01/1608F245C04/1608F245C05

Top layer:

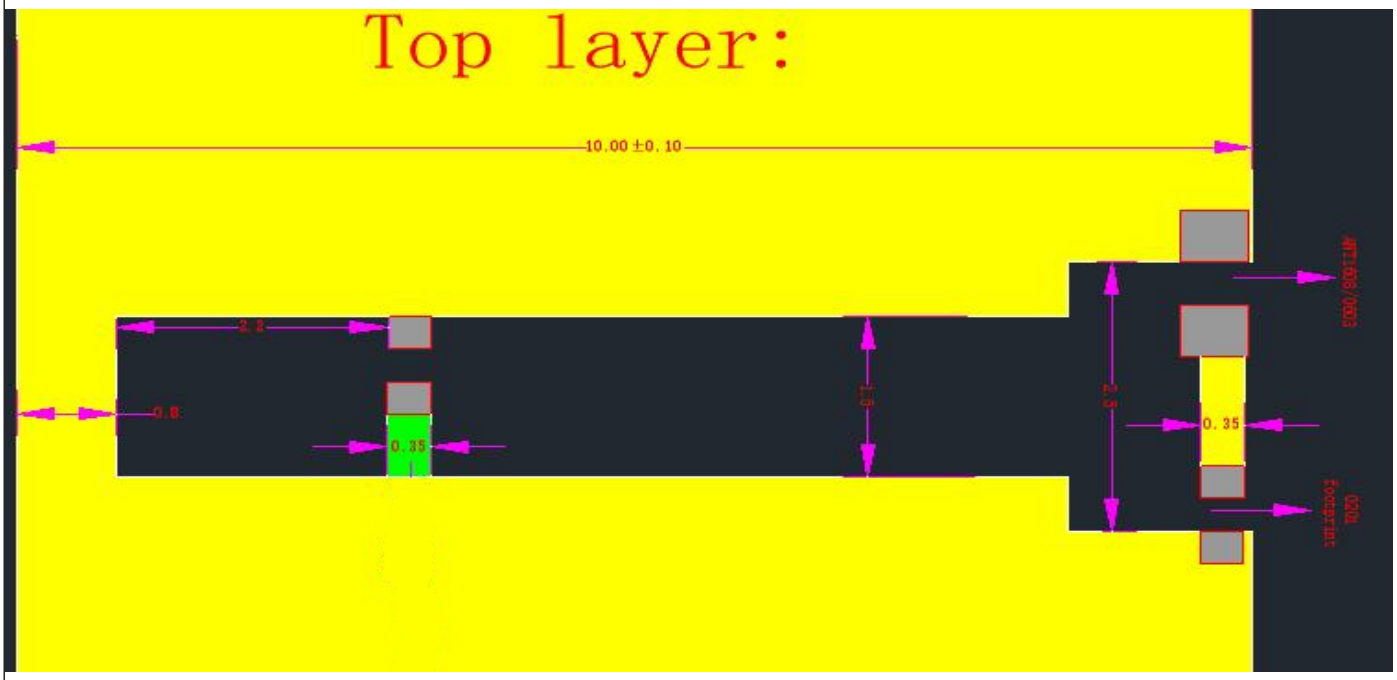

Top layer:

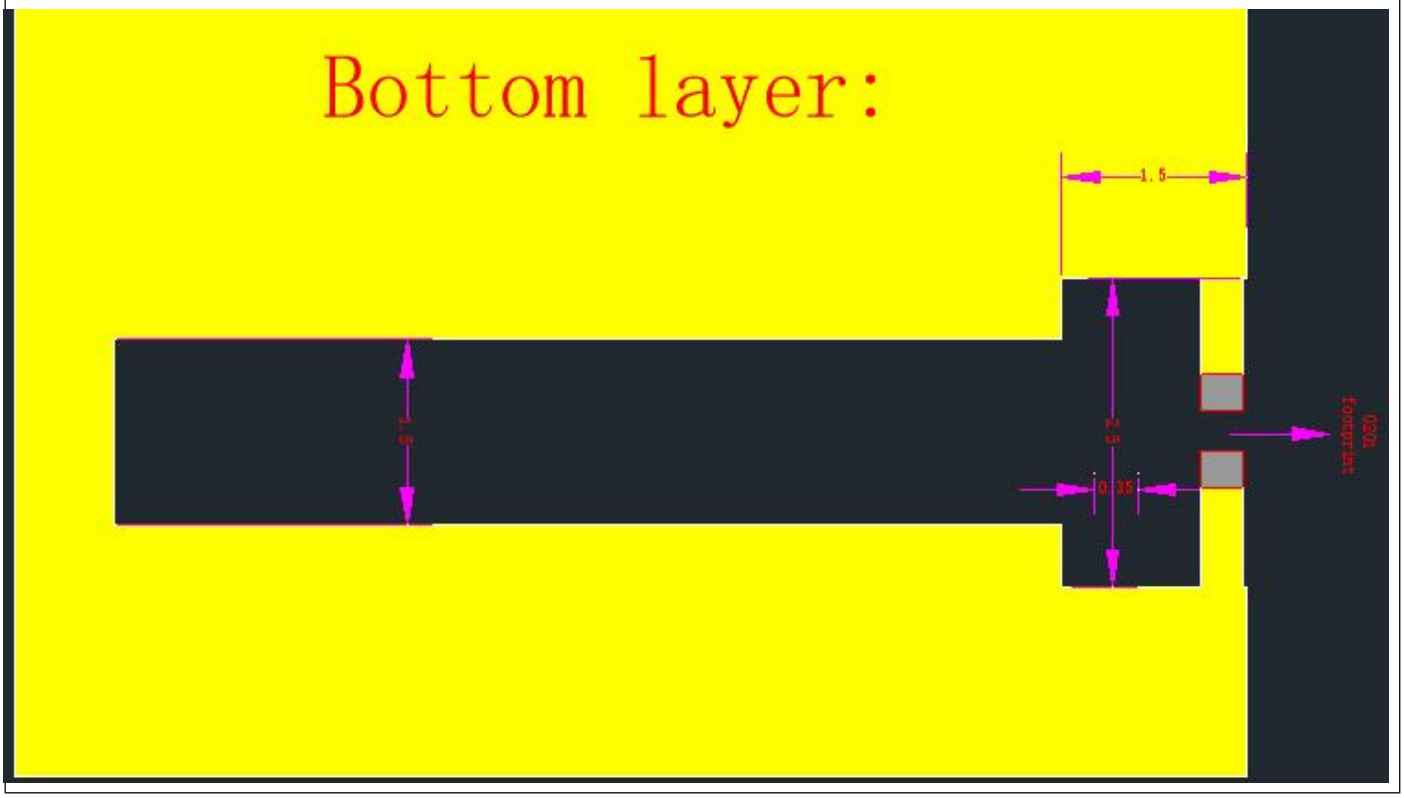

2.4GHz 1608 Chip Antenna: RANT1608F245C01/1608F245C04/1608F245C05

Electrical Characteristics

Return Loss & Radiation

ELECTRICAL CHARACTERISTICSS11

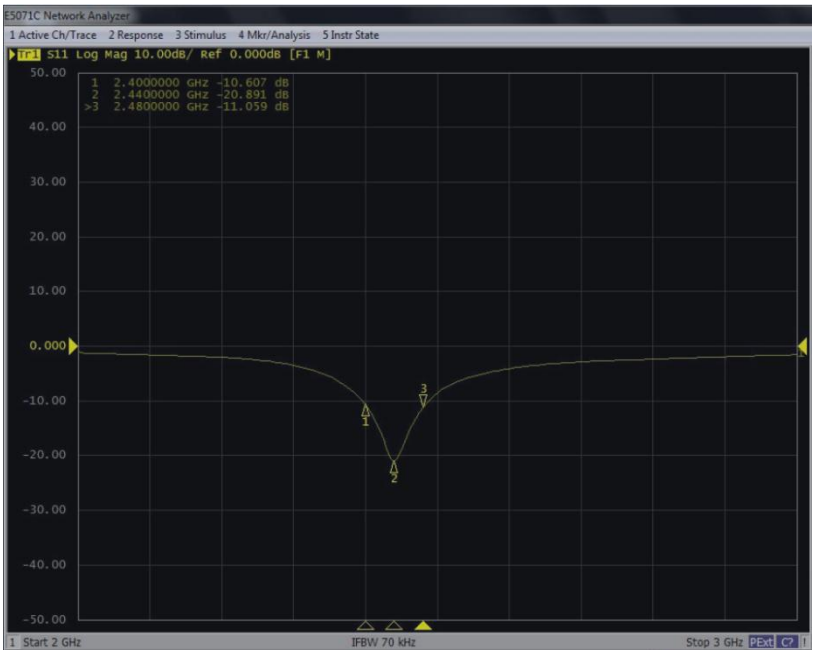

Radiation Pattern

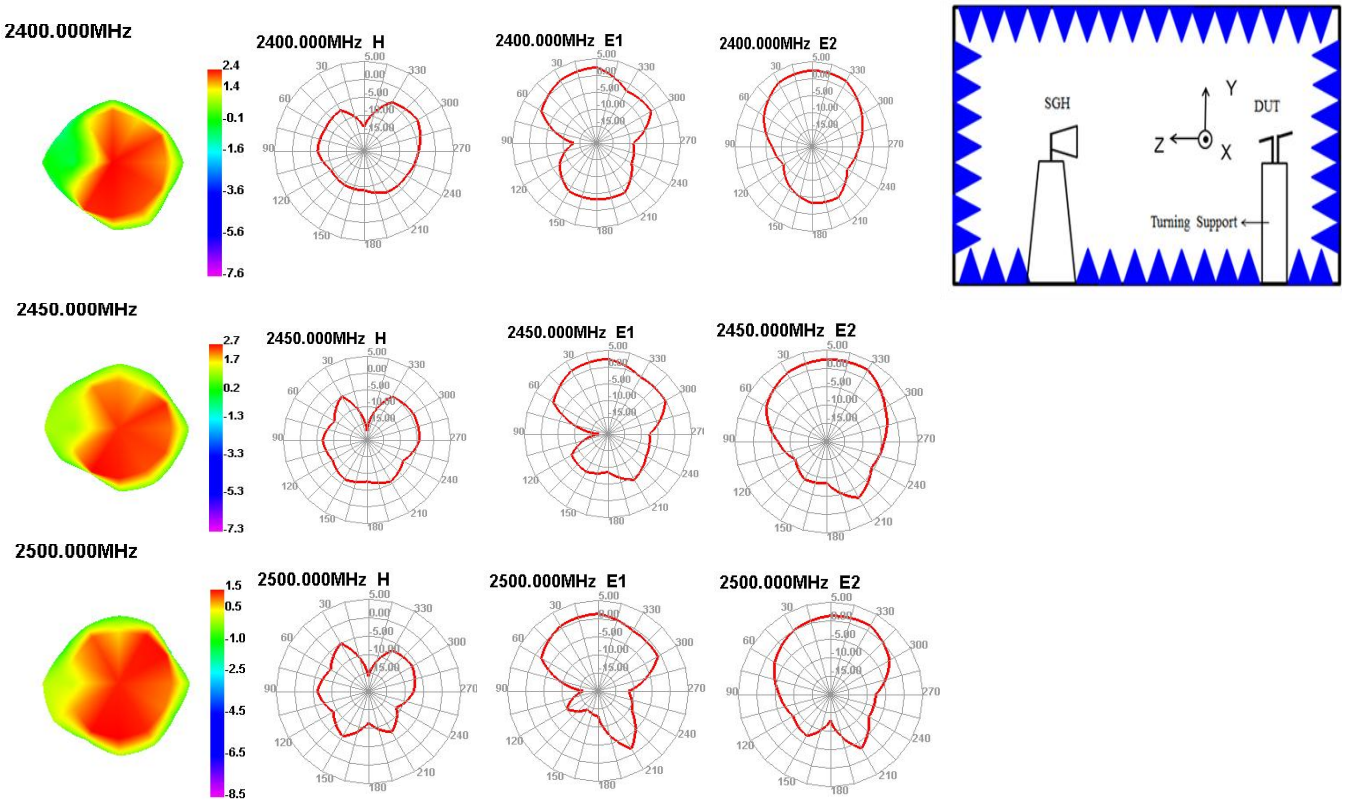

2.4GHz 1608 Chip Antenna: RANT1608F245C01/1608F245C04/1608F245C05

Electrical Characteristics

	Feature	Specification
1	Central frequency	2.45GHz&5.5GHz
2	Bandwidth	>150MHz
3	Peak gain	2.7dBi
4	VSWR	<2
5	Polarization	Linear
6	Azimuth beamwidth	Omnidirectional
7	Impedance	50 Ω

2.4GHz 1608 Chip Antenna:
RANT1608F245C01/1608F245C04/1608F245C05

Taping Specifications

Reel and Taping Specification

Reel Specification

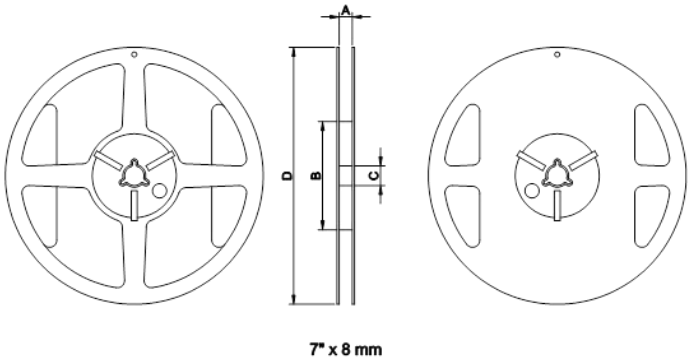

TYPE	SIZE		A	B	C	D
1608	7”	4K/Reel	4.0±0.5	4.0±2	13.5±0.5	178±2

Tapping Specification

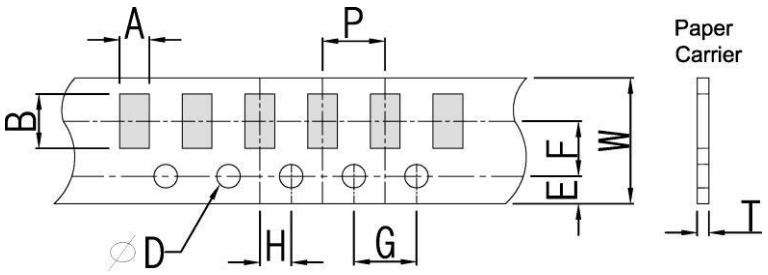

Packaging	Type	A	B	W	E	F	G	H	T	ψD	P
Paper Type	1608	1.90±0.20	3.50±0.20	8.0±0.20	1.75±0.10	3.5±0.05	4.0±0.10	2.0±0.05	0.75±0.10	1.50±0.10	4.0±0.1

2.4GHz 1608 Chip Antenna: RANT1608F245C01/1608F245C04/1608F245C05

Reliability Table

Test Item	Procedure	Requirements Ceramic Type	Remark (Reference)
Electrical Characterization		Fulfill the electrical specification	User Spec.
Thermal Shock	1. Preconditioning: 50 ± 10℃ / 1 hr , then keep for 24 ± 1 hrs at room temp. 2. Initial measure: Spec: refer Initial spec. 3. Rapid change of temperature test: -30℃ to +85℃; 100 cycles; 15 minutes at Lower category temperature; 15 minutes at Upper category temperature.	No Visible Damage. Fulfill the electrical specification.	MIL-STD-202 107
Temperature Cycling	1. Initial measure: Spec: refer Initial spec. 2. 100 Cycles (-30℃ to +85℃), Soak Mode=1 (2 Cycle/hours). 3. Measurement at 24 ± 2Hours after test condition.	No Visible Damage. Fulfill the electrical specification.	JESD22 JA104
High Temperature Exposure	1. Initial measure: Spec: refer Initial spec. 2. Unpowered; 500hours @ T=+85℃. 3. Measurement at 24 ± 2 hours after test.	No Visible Damage. Fulfill the electrical specification.	MIL-STD-202 108
Low Temperature Storage	1. Initial measure: Spec: refer Initial spec. 2. Unpowered: 500hours @ T=-30℃. 3. Measurement at 24 ± 2 hours after test.	No Visible Damage. Fulfill the electrical specification.	MIL-STD-202 108
Solderability (SMD Bottom Side)	Dipping method: a. Temperature: 235 ±5°C b. Dipping time: 3 ±0.5s	The solder should cover over 95% of the critical area of bottom side.	IEC 60384-21/22 4.10
Soldering Heat Resistance (RSH)	Preheating temperature: 150 ± 10°C. Preheating time: 1~2 min. Solder temperature: 260 ± 5°C. Dipping time: 5 ± 0.5s	No Visible Damage.	IEC 60384-21/22 4.10
Vibration	5g's for 20 min., 12 cycles each of 3 orientations Note: Use 8"X5" PCB .031" thick 7 secure points on, one long side and 2 secure points at corners of opposite sides. Parts mounted within 2" from any secure point. Test from 10-2000 Hz.	No Visible Damage.	MIL-STD-202 Method 204
Mechanical Shock	Three shocks in each direction shall be applied along the three mutually perpendicular axes of the test specimen (18 shocks) Peak value: 1,500g's Duration: 0.5ms Velocity change: 15.4 ft/s Waveform: Half-sine	No Visible Damage.	MIL-STD-202 Method 213
Humidity Bias	1. Humidity: 85% R.H., Temperature: 85 ± 2 °C. 2. Time: 500 ± 24 hours. 3. Measurement at 24 ± 2hrs after test condition.	No Visible Damage. Fulfill the electrical specification.	MIL-STD-202 Method 106

Board Flex (SMD)	1. Mounting method: IR-Reflow. PCB Size (L:100 × W:40 × T:1.6mm) 2. Apply the load in direction of the arrow until bending reaches 2 mm.	No Visible Damage.	AEC-Q200 005
Adhesion	Force of 1.8Kg for 60 seconds. 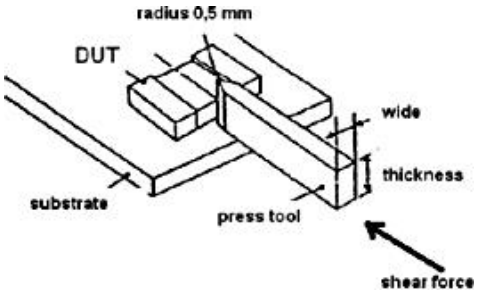 	No Visible Damage Magnification of 20X or greater may be employed for inspection of the mechanical integrity of the device body terminals and body/terminal junction.	AEC-Q200 006
Physical Dimension	Any applicable method using x10 magnification, micrometers, calipers, gauges, contour projectors, or other measuring equipment, capable of determining the actual specimen dimensions.	In accordance with specification.	JESD22 JB100

Revision History

Revision	Date	Content
1	2019/03/01	New Datasheet
2	2020/02/22	Add 2D radiation characteristic