TEST REPORT

Product Name	:	2.4g rf module
Model Number	:	TM9001
FCC ID	:	2BGGF-TM9001

Prepared for	:	Taimo (Shanghai) IoT Technology Co., Ltd.
Address	:	Room 1815, Building 2, No. 31 Jiatong Road, Nanxiang Town, Jiading District, Shanghai
Prepared by	:	EMTEK (NINGBO) CO., LTD.
Address	:	No. 8, Building 8, Lane 216, Qingyi Road, Ningbo Hi-Tech Zone, Ningbo, Zhejiang, China Tel : +86-0769-22807078 Fax: +86-0769-22807079

Report Number	:	ENB2404260014W00401R
Date(s) of Tests	:	April 26, 2024 to May 13, 2024
Date of Issue	:	May 16, 2024

Table of Contents

1 TEST RESULT CERTIFICATION 3

2 EUT TECHNICAL DESCRIPTION 5

3 SUMMARY OF TEST RESULT 6

4 TEST METHODOLOGY 7

4.1 GENERAL DESCRIPTION OF APPLIED STANDARDS 7
4.2 MEASUREMENT EQUIPMENT USED 7
4.3 DESCRIPTION OF TEST MODES 9
4.4 TEST SOFTWARE 9

5 FACILITIES AND ACCREDITATIONS 10

5.1 FACILITIES 10
5.2 LABORATORY ACCREDITATIONS AND LISTINGS 10

6 TEST SYSTEM UNCERTAINTY 11

7 SETUP OF EQUIPMENT UNDER TEST 12

7.1 RADIO FREQUENCY TEST SETUP 1 12
7.2 RADIO FREQUENCY TEST SETUP 2 12
7.3 CONDUCTED EMISSION TEST SETUP 14
7.4 SUPPORT EQUIPMENT 14

8 TEST REQUIREMENTS 15

8.1 BANDWIDTH TEST 15
8.2 RADIATED SPURIOUS EMISSION 17
8.3 CONDUCTED EMISSIONS TEST 27
8.4 ANTENNA APPLICATION 30

1 TEST RESULT CERTIFICATION

Applicant	:	Taimo (Shanghai) IoT Technology Co., Ltd.
Address	:	Room 1815, Building 2, No. 31 Jiatong Road, Nanxiang Town, Jiading District, Shanghai
Manufacturer	:	Taimo (Shanghai) IoT Technology Co., Ltd.
Address	:	Room 1815, Building 2, No. 31 Jiatong Road, Nanxiang Town, Jiading District, Shanghai
EUT	:	2.4g rf module
Model Name	:	TM9001
Trademark	:	N/A

Measurement Procedure Used:

APPLICABLE STANDARDS	
STANDARD	**TEST RESULT**
FCC 47 CFR Part 2, Subpart J FCC 47 CFR Part 15, Subpart C	**PASS**

The above equipment was tested by EMTEK (NINGBO) CO., LTD. The test data, data evaluation, test procedures, and equipment configurations shown in this report were made in accordance with the procedures given in ANSI C63.10 (2013) and the energy emitted by the sample EUT tested as described in this report is in compliance with the requirements of FCC Rules Part 2 and Part 15.249

The test results of this report relate only to the tested sample identified in this report.

Date of Test : April 26, 2024 to May 13, 2024

Prepared by : June Gao /Engineer

Reviewer : Lucas Xu /Supervisor

Approve & Authorized Signer : Tony wei/Manager

Modified History

Version	Report No.	Revision Date	Summary
/	ENB2404260014W00401R	/	Original Report

2 EUT TECHNICAL DESCRIPTION

Product:	2.4g rf module
Model Number:	TM9001
Sample Number:	ENB2404260014W004-1-1
Power Supply:	DC 3.3V
Modulation:	GFSK
Frequency Range:	2423 MHz, 2470MHz
Max Transmit Power:	89.25 dBuV/m
Antenna:	PCB Antenna
Antenna Gain:	4.65 dBi
Test Power:	AC 120V/60Hz
Temperature Range:	-10°C ~ +90°C
Received of Date:	April 26, 2024

Note: for more details, please refer to the user's manual of the EUT.

3 SUMMARY OF TEST RESULT

FCC Part Clause	Test Parameter	Verdict	Remark
15.207	Conducted Emission	PASS	
15.209	Radiated Emission	PASS	
15.249	Radiated Spurious Emission	PASS	
15.249	Band edge test	PASS	
15.249	20dB Bandwidth	PASS	
15.203	Antenna Requirement	PASS	

NOTE1: N/A is an abbreviation for not applicable
NOTE2: The report use radiated measurements in the restricted frequency bands. In addition, the radiated test is also performed to ensure the emissions emanating from the device cabinet also comply with the applicable limits.

RELATED SUBMITTAL(S) / GRANT(S):
This submittal(s) (test report) is intended for FCC ID: 2BGGF-TM9001 filing to comply with Section 15.249 of the FCC Part 15, Subpart C Rules.

4 TEST METHODOLOGY

4.1 GENERAL DESCRIPTION OF APPLIED STANDARDS

According to its specifications, the EUT must comply with the requirements of the following standards:
FCC 47 CFR Part 2, Subpart J
FCC 47 CFR Part 15, Subpart C

4.2 MEASUREMENT EQUIPMENT USED

4.2.1 Conducted Emission Test Equipment

Equ.No.	Equipment	Manufacturer	Model No.	Serial No.	Last Cal.	Cal. Interval
ENE-002	EMI Test Receiver	R & S	ESCI	101107	July 06, 2023	1 Year
ENE-003	L.I.S.N	R & S	ENV216	101193	July 06, 2023	1 Year
ENE-162-1	RF Cable	TIMES	2M(N-N)	605236-0001	May 31, 2023	1 Year
ENE-150	Conduction Test Room 2#	SKET	6.5*5*4m	/	Apr 17, 2023	3 Year

4.2.2 Radiated Emission Test Equipment

Equ. No.	Equipment	Manufacturer	Model No.	Serial No.	Last Cal.	Cal. Interval
ENE-185	EMI Test Receiver	R&S	ESR7	102480	Apr 25, 2024	1 Year
ENE-190	Antenna Multiple	Schwarzbeck	VULB 9163	01499	May 21, 2022	2 Year
ENE-195	Pre-Amplifier	JS Denki	PA09K03-40	JSPA21019	Apr 25, 2024	1 Year
ENE-204	Low Frequency Notch Filter RF Switching	JS Denki	JSDSW-F	JSDSW2211D 02	Apr 25, 2024	1 Year
ENE-251	6dB Attenuator	Mini-Circuits	UNAT-6+	11542	July 06, 2023	1 Year
ENE-279-1	RF Cable	Rosenberger	L17-C001-7000	/	May 31, 2023	1 Year
ENE-279-2	RF Cable	Rosenberger	L17-C001-3500	/	May 31, 2023	1 Year
ENE-279-3	RF Cable	Rosenberger	L17-C001-1500	/	May 31, 2023	1 Year
ENE-279-4	RF Cable	Rosenberger	/	/	May 31, 2023	1 Year
ENE-279-5	RF Cable	Rosenberger	/	/	May 31, 2023	1 Year
ENE-279-6	RF Cable	Rosenberger	L08-C446-1500	/	May 31, 2023	1 Year
ENE-171	EXA Signal Analyzer	KEYSIGHT	N9010B	MY60242467	Dec 14, 2023	1 Year
ENE-191	Horn Antenna	Schwarzbeck	BBHA 9120 D	02588	May 21, 2022	2 Year
ENE-198	Pre-Amplifier	JS Denki	PA0118-50	JSPA21022	Apr 25, 2024	1 Year

ENE-281-1	RF Cable	Rosenberger	LA2-C125-3500	/	May 31, 2023	1 Year
ENE-281-2	RF Cable	Rosenberger	LA2-C125-1500	/	May 31, 2023	1 Year
ENE-281-3	RF Cable	Rosenberger	LU7-C1511-1200	/	May 31, 2023	1 Year
ENE-285-1	RF Cable	Rosenberger	LA2-C199-6500	/	May 31, 2023	1 Year
ENE-206	High Frequency Notch FilterRf Switching	JS Denki	JSDSW-F	202083582	Apr 25, 2024	1 Year
ENE-144	3-Meter Anechoic Chamber 2#	SKET	9*6*6m	/	June 19, 2022	3 Year

4.2.3 Radio Frequency Test Equipment

Equ. No.	Equipment	Manufacturer	Model No.	Serial No.	Last Cal.	Cal. Interval
ENE-256	EXA Signal Anaalyzer	Keysight	N9010B	MY62060219	July 05, 2023	1 Year
ENE-172	RF Control Unit	Tonscend	JS0806-2(V.6E)	21L8060521	February 27, 2024	1 Year
ENE-092	DC Power Supply	KEFUNA	KDP3603	2004D3062946	July 07, 2023	1 Year

Remark: *Each piece of equipment is scheduled for calibration once a year.*

4.3 DESCRIPTION OF TEST MODES

The EUT has been tested under its typical operating condition.
The EUT configuration for testing is installed on RF field strength measurement to meet the Commissions requirement and operating in a manner which intends to maximize its emission characteristics in a continuous normal application.
The Transmitter was operated in the normal operating mode. The TX frequency was fixed which was for the purpose of the measurements.

Test of channel included the lowest and middle and highest frequency to perform the test, then record on this report.

The EUT has been tested under its typical operating condition so those modulation and channel were used for all test.

Pre-defined engineering program for regulatory testing used to control the EUT for staying in continuous transmitting and receiving mode is programmed.

Frequency and Channel list:

Channel	Frequency (MHz)	Channel	Frequency (MHz)	Channel	Frequency (MHz)
1	2423	2	2470MHz	/	/
Note: N/A					

Test Frequency and Channel list:

Channel	Frequency (MHz)	Channel	Frequency (MHz)	Channel	Frequency (MHz)
1	2423	2	2470MHz	/	/

4.4 TEST SOFTWARE

Item	Software
Radiated Emission:	EMI_Test_Tool (V2.0)
Conducted Emission:	EMI_Test_Tool (V2.0)

5 FACILITIES AND ACCREDITATIONS

5.1 FACILITIES

All measurement facilities used to collect the measurement data are located at
EMTEK (NINGBO) CO., LTD.
No. 8, Building 8, Lane 216, Qingyi Road, Ningbo Hi-Tech Zone, Ningbo, Zhejiang, China
The sites are constructed in conformance with the requirements of ANSI C63.7, ANSI C63.10 and CISPR Publication 32.

5.2 LABORATORY ACCREDITATIONS AND LISTINGS

Site Description		
EMC Lab.	:	**Accredited by CNAS** The Certificate Registration Number is L6666. The Laboratory has been assessed and proved to be in compliance with CNAS-CL01:2018 (identical to ISO/IEC 17025:2017) **Designation by FCC** Designation Number: CN1354 Test Firm Registration Number: 427606 **Accredited by A2LA** The certificate is valid until May 31, 2025 **Accredited by Industry Canada** The Conformity Assessment Body Identifier is CN0114
Name of Firm	:	EMTEK (NINGBO) CO., LTD.
Site Location	:	No. 8, Building 8, Lane 216, Qingyi Road, Ningbo Hi-Tech Zone, Ningbo, Zhejiang, China

6 TEST SYSTEM UNCERTAINTY

The following measurement uncertainty levels have been estimated for tests performed on the apparatus:

Parameter	Uncertainty
Radio Frequency	±1x10^-5
Radiated Emission Test	±2.0dB
Occupied Bandwidth Test	±1.0dB
Band Edge Test	±3dB
All emission, radiated	±3dB
Temperature	±0.5℃
Humidity	±3%

Measurement Uncertainty for a level of Confidence of 95%

7 SETUP OF EQUIPMENT UNDER TEST

7.1 RADIO FREQUENCY TEST SETUP 1

The EUT wireless component's antenna ports(s) of the EUT are connected to the measurement instrument per an appropriate attenuator. The EUT is controlled by PC/software to emit the specified signals for the purpose of measurements.

7.2 RADIO FREQUENCY TEST SETUP 2

The test site semi-anechoic chamber has met the requirement of NSA tolerance 4 dB according to the standards: ANSI C63.10. The test distance is 3m.The setup is according to the requirements in Section 13.1.4.1 of ANSI C63.10-2014 and CAN/CSA-CEI/IEC CISPR 32.

Below 30MHz：

The EUT is placed on a turntable 0.8 meters above the ground in the chamber, 3 meter away from the antenna (loop antenna). The Antenna should be positioned with its plane vertical at the specified distance from the EUT and rotated about its vertical axis for maximum response at each azimuth about the EUT. The center of the loop shall be 1 m above the ground. For certain applications, the loop antenna plane may also need to be positioned horizontally at the specified distance from the EUT.

30MHz-1GHz：

The EUT is placed on a turntable 0.8 meters above the ground in the chamber, 3 meter away from the antenna. The maximal emission value is acquired by adjusting the antenna height, polarisation and turntable azimuth. Normally, the height range of antenna is 1 m to 4 m, the azimuth range of turntable is 0° to 360°, and the receive antenna has two polarizations Vertical (V) and Horizontal (H).

Above 1GHz：

The EUT is placed on a turntable 1.5 meters above the ground in the chamber, 3 meter away from the antenna. The maximal emission value is acquired by adjusting the antenna height, polarisation and turntable azimuth. Normally, the height range of antenna is 1 m to 4 m, the azimuth range of turntable is 0° to 360°, and the receive antenna has two polarizations Vertical (V) and Horizontal (H).

(a) Radiated Emission Test Set-Up, Frequency Below 30MHz

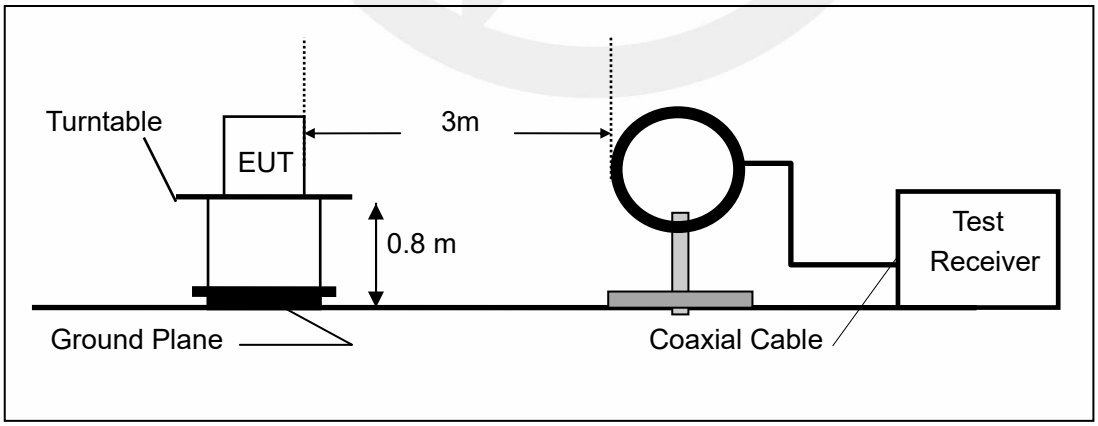

(b) Radiated Emission Test Set-Up, Frequency Below 1000MHz

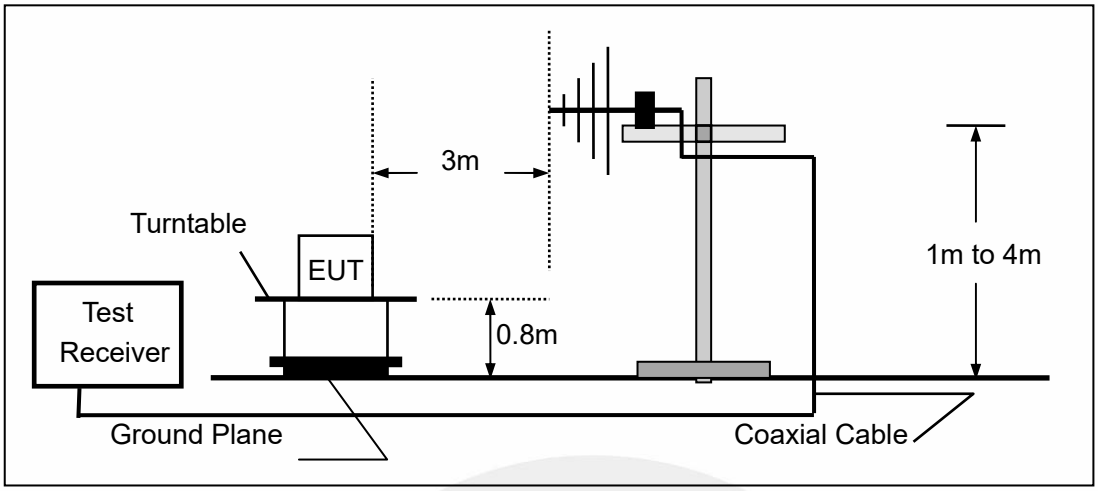

(c) Radiated Emission Test Set-Up, Frequency above 1000MHz

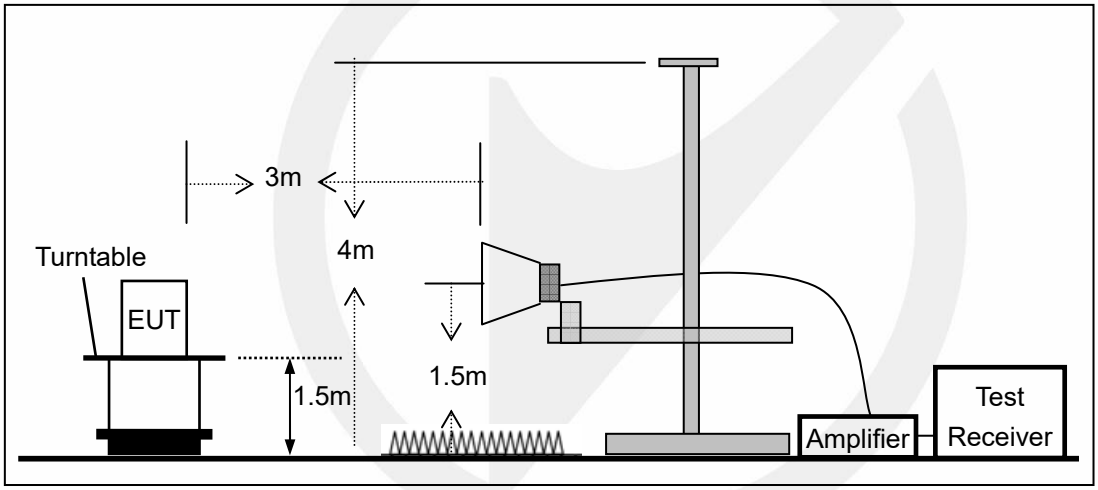

7.3 CONDUCTED EMISSION TEST SETUP

The mains cable of the EUT (maybe per AC/DC Adapter) must be connected to LISN. The LISN shall be placed 0.8 m from the boundary of EUT and bonded to a ground reference plane for LISN mounted on top of the ground reference plane. This distance is between the closest points of the LISN and the EUT. All other units of the EUT and associated equipment shall be at least 0.8m from the LISN.
Ground connections, where required for safety purposes, shall be connected to the reference ground point of the LISN and, where not otherwise provided or specified by the manufacturer, shall be of same length as the mains cable and run parallel to the mains connection at a separation distance of not more than 0.1 m.
According to the requirements in Section 13.1.4.1 of ANSI C63.10-2014 Conducted emissions from the EUT measured in the frequency range between 0.15 MHz and 30 MHz using CISPR Quasi-Peak and average detector mode.

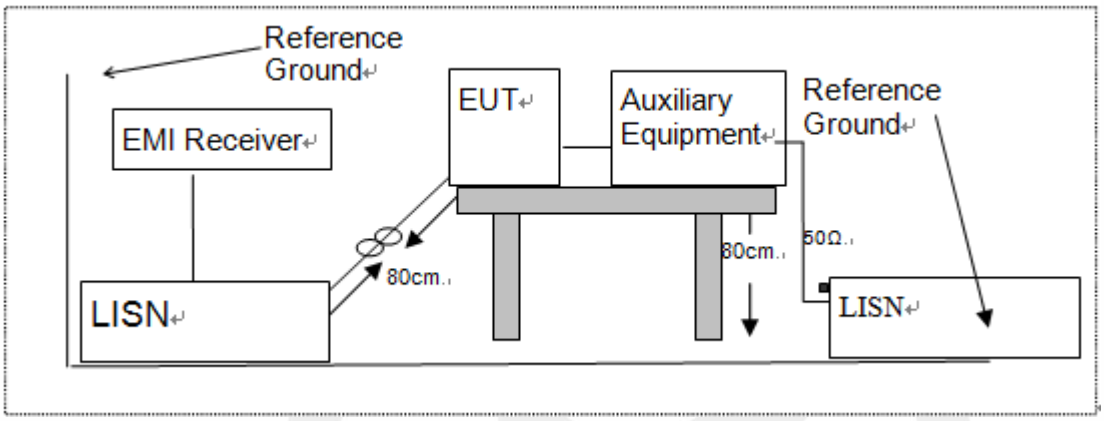

7.4 SUPPORT EQUIPMENT

EUT Cable List and Details			
Cable Description	Length (m)	Shielded/Unshielded	With / Without Ferrite
/	/	/	/

Auxiliary Cable List and Details			
Cable Description	Length (m)	Shielded/Unshielded	With / Without Ferrite
/	/	/	/

Auxiliary Equipment List and Details			
Description	Manufacturer	Model	Serial Number
/	/	/	/

Notes:

1. All the equipment/cables were placed in the worst-case configuration to maximize the emission during the test.
2. Grounding was established in accordance with the manufacturer's requirements and conditions for the intended use.

8 TEST REQUIREMENTS

8.1 BANDWIDTH TEST

8.1.1 Applicable Standard

According to FCC Part 15.249

8.1.2 Conformance Limit

N/A

8.1.3 Test Configuration

Test according to clause 7.1 radio frequency test setup 1

8.1.4 Test Procedure

The EUT was operating in controlled its channel. Printed out the test result from the spectrum by hard copy function.
The RF output of EUT was connected to the spectrum analyzer by RF cable and attenuator. The path loss was compensated to the results for each measurement.
Set to the maximum power setting and enable the EUT transmit continuously
Set RBW= 1%~5% of the 20 dB bandwidth
Set the video bandwidth (VBW) ≥ RBW
Set Span= approximately 2 to 3 times the 20 dB bandwidth
Set Detector = Peak.
Set Trace mode = max hold.
Set Sweep = auto couple.
Measure the maximum width of the emission that is constrained by the frequencies associated with the two outermost amplitude points (upper and lower frequencies) that are attenuated by 20 dB relative to the maximum level measured in the fundamental emission.
Measure and record the results in the test report.

Test Results

Temperature:	22 °C
Relative Humidity:	66 %
ATM Pressure:	1011 mbar

Operation Mode	Channel Frequency (MHz)	20db Measurement Bandwidth (MHz)	99% Measurement Bandwidth (MHz)	Limit (kHz)	Verdict
GFSK	2423	1.549	1.2978	N/A	PASS
GFSK	2470	1.539	1.2786	N/A	PASS
Note: N/A (Not Applicable).					

Test Model	Occupied Bandwidth
	Channel : 2423MHz

Test Model	Occupied Bandwidth
	Channel : 2470MHz

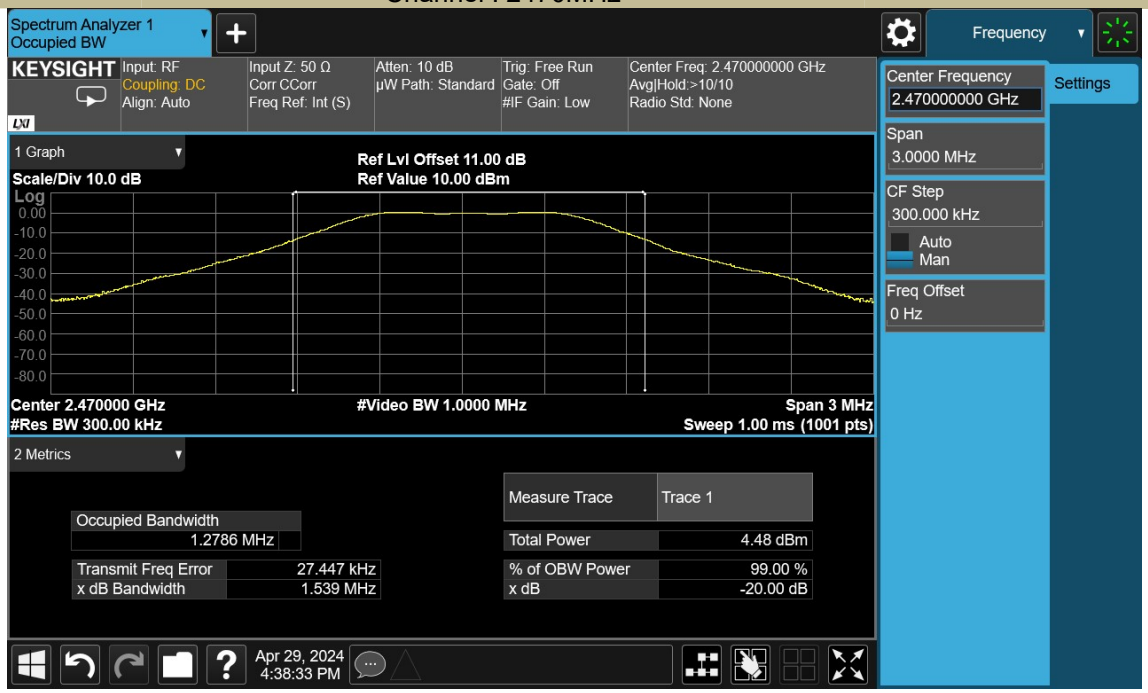

8.2 RADIATED SPURIOUS EMISSION

8.2.1 Applicable Standard

According to FCC Part 15.249 and 15.209

8.2.2 Conformance Limit

According to FCC Part 15.249: radiated emissions which fall in the restricted bands, as defined in §15.205(a), must also comply with the radiated emission limits specified in §15.209(a) (see §15.205(c)).
According to FCC Part15.205, Restricted bands

MHz	MHz	MHz	GHz
0.090-0.110	16.42-16.423	399.9-410	4.5-5.15
10.495-0.505	16.69475-16.69525	608-614	5.35-5.46
2.1735-2.1905	16.80425-16.80475	960-1240	7.25-7.75
4.125-4.128	25.5-25.67	1300-1427	8.025-8.5
4.17725-4.17775	37.5-38.25	1435-1626.5	9.0-9.2
4.20725-4.20775	73-74.6	1645.5-1646.5	9.3-9.5
6.215-6.218	74.8-75.2	1660-1710	10.6-12.7
6.26775-6.26825	123-138	2200-2300	14.47-14.5
8.291-8.294	149.9-150.05	2310-2390	15.35-16.2
8.362-8.366	156.52475-156.52525	2483.5-2500	17.7-21.4
8.37625-8.38675	156.7-156.9	2690-2900	22.01-23.12
8.41425-8.41475	162.0125-167.17	3260-3267	23.6-24.0
12.29-12.293	167.72-173.2	3332-3339	31.2-31.8
12.51975-12.52025	240-285	3345.8-3358	36.43-36.5
12.57675-12.57725	322-335.4	3600-4400	(2)
13.36-13.41			

According to FCC Part15.205, the level of any transmitter spurious emission in Restricted bands shall not exceed the level of the emission specified in the following table

Restricted Frequency(MHz)	Field Strength (μV/m)	Field Strength (dBμV/m)	Measurement Distance
0.009-0.490	2400/F(KHz)	20 log (uV/m)	300
0.490-1.705	24000/F(KHz)	20 log (uV/m)	30
1.705-30	30	29.5	30
30-88	100	40	3
88-216	150	43.5	3
216-960	200	46	3
Above 960	500	54	3

Remark :1. Emission level in dBuV/m=20 log (uV/m)
2. Measurement was performed at an antenna to the closed point of EUT distance of meters.
3. Distance extrapolation factor =40log(Specific distance/ test distance)(dB);
Limit line=Specific limits(dBuV) + distance extrapolation factor.
for the frequency ranges below 30 MHz, a narrower RBW is used for these ranges but the measured value should add a RBW correction factor (RBWCF) where RBWCF [dB] =10*lg(100 [kHz]/narrower RBW [kHz]). , the narrower RBW is 1 kHz and RBWCF is 20 dB for the frequency 9 kHz to 150 kHz, and the narrower RBW is 10 kHz and RBWCF is 10 dB for the frequency 150 kHz to 30 MHz.

Field strength of fundamental and Field strength of harmonics Limit:

Fundamental frequency	Field strength of fundamental (millivolts/meter)	Field strength of harmonics (microvolts/meter)
902-928 MHz	50(94 dBV/m)	500(54 dBV/m)
2400-2483.5 MHz	50(94 dBV/m)	500(54 dBV/m)
5725-5875 MHz	50(94 dBV/m)	500(54 dBV/m)
24.0-24.25 GHz	250(108 dBV/m)	2500(68 dBV/m)

As shown in §15.35(b), for frequencies above 1000 MHz, the field strength limits in paragraphs (a) and (b) of this section are based on average limits. However, the peak field strength of any emission shall not exceed the maximum permitted average limits specified above by more than 20 dB under any condition of modulation

For this report

Fundamental Frequency	Field Strength Of Fundamental	Field Strength of Spurious Emissions
2400-2483.5 MHz	AV:94 dBuV/m at 3m distance	AV:54 dBuV/m at 3m distance
	PK:114 dBuV/m at 3m distance	PK:74 dBuV/m at 3m distance

8.2.3 Test Configuration

Test according to clause 7.2 radio frequency test setup 2

8.2.4 Test Procedure

This test is required for any spurious emission that falls in a Restricted Band, as defined in Section 15.205. It must be performed with the highest gain of each type of antenna proposed for use with the EUT. Use the following spectrum analyzer settings:
The EUT was placed on a turn table which is 0.8m above ground plane.
Maximum procedure was performed on the highest emissions to ensure EUT compliance.
Span = wide enough to fully capture the emission being measured
RBW = 1 MHz for f ≥ 1 GHz(1GHz to 25GHz), 100 kHz for f < 1 GHz(30MHz to 1GHz)
VBW ≥ RBW
Sweep = auto
Detector function = peak
Trace = max hold
Follow the guidelines in ANSI C63.10-2014 with respect to maximizing the emission by rotating the EUT, measuring the emission while the EUT is situated in three orthogonal planes (if appropriate), adjusting the measurement antenna height and polarization, etc. A pre-amp and a high pass filter are required for this test, in order to provide the measuring system with sufficient sensitivity. Allow the trace to stabilize. The peak reading of the emission, after being corrected by the antenna factor, cable loss, pre-amp gain, etc., is the peak field strength, which must comply with the limit specified in Section 15.35(b). Submit this data.
Now set the VBW to 10 Hz, while maintaining all of the other instrument settings. This peak level, once corrected, must comply with the limit specified in Section 15.209. If the dwell time per channel of the hopping signal is less than 100 ms, then the reading obtained with the 10 Hz VBW may be further adjusted by a “duty cycle correction factor”, derived from 20log(dwell time/100 ms), in an effort to demonstrate compliance with the 15.209 limit. Submit this data.
Repeat above procedures until all frequency measured was complete.

8.2.5 Test Results

Temperature:	18 °C
Relative Humidity:	64 %
ATM Pressure:	1011 mbar

■ Spurious Emission below 30MHz (9KHz to 30MHz)

Freq. (MHz)	Ant.Pol. H/V	Emission Level(dBuV/m)		Limit 3m(dBuV/m)		Over(dB)	
		PK	AV	PK	AV	PK	AV
--	--	--	--	--	--	--	--

Note: the amplitude of spurious emission that is attenuated by more than 20dB below the permissible limit has no need to be reported.
Distance extrapolation factor =40log(Specific distance/ test distance)(dB);
Limit line=Specific limits(dBuV) + distance extrapolation factor

■ Field Strength of the fundamental signal

Freq. (MHz)	Ant.Pol. H/V	Emission Level(dBuV/m)		Limit 3m(dBuV/m)		Over(dB)	
		PK	AV	PK	AV	PK	AV
2423	V	77.97	64.83	114	94	-36.03	-29.17
2423	H	89.25	75.24	114	94	-24.75	-18.76

Freq. (MHz)	Ant.Pol. H/V	Emission Level(dBuV/m)		Limit 3m(dBuV/m)		Over(dB)	
		PK	AV	PK	AV	PK	AV
2470	V	78.38	65.48	114	94	-35.62	-28.52
2470	H	87.95	72.74	114	94	-26.05	-21.26

Note: (1) Correct Factor= Antenna Factor +Cable Loss- Amplifier Gain
(2) Emission Level= Reading Level+Probe Factor +Cable Loss

■ Out of Band Emissions

Test mode: GFSK Frequency: Channel : 2423MHz

Frequency (MHz)	Polarity	PK(dBuV/m) (VBW=3MHz)	Limit 3m (dBuV/m)	AV(dBuV/m) (VBW=10Hz)	Limit 3m (dBuV/m)
2372.720	H	57.92	74	46.86	54
2358.200	V	58.03	74	44.16	54

Test mode: GFSK Frequency: Channel : 2470MHz

Frequency (MHz)	Polarity	PK(dBuV/m) (VBW=3MHz)	Limit 3m (dBuV/m)	AV(dBuV/m) (VBW=10Hz)	Limit 3m (dBuV/m)
2486.247	H	58.66	74	46.25	54
2492.649	V	58.80	74	45.41	54

Note: (1) All Readings are Peak Value (VBW=3MHz) and Average Value (VBW=10Hz).
(2) Emission Level= Reading Level+Correct Factor +Cable Loss.
(3) Correct Factor= Ant_F + Cab_L - Preamp
(4)Data of measurement within this frequency range shown " -- " in the table above means the reading of emissions are attenuated more than 20dB below the permissible limits or the field strength is too small to be measured.

Test Model	Band Emissions Low Test By: Lucas Xu	H

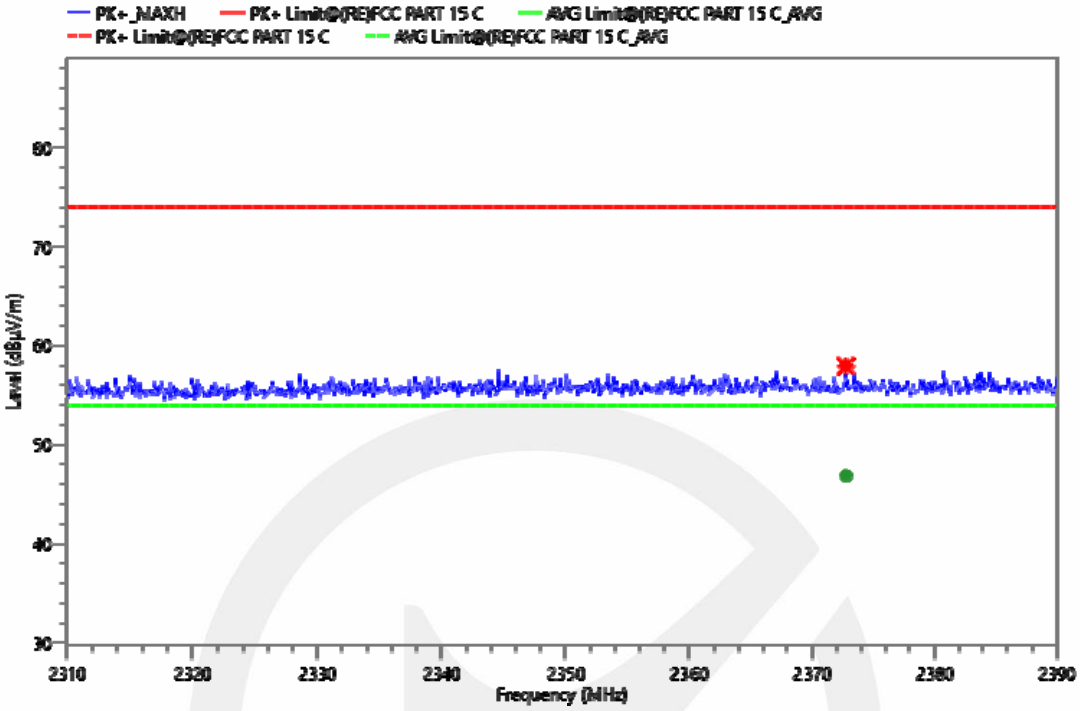

Test Model	Band Emissions Low Test By: Lucas Xu	V

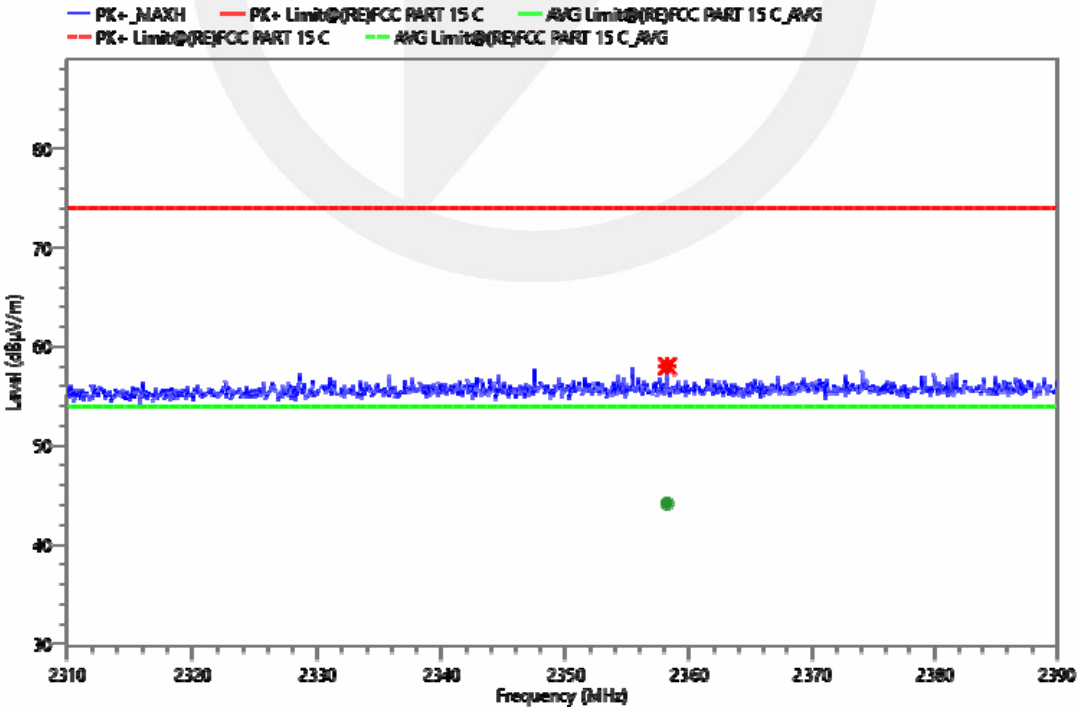

Test Model	Band Emissions High Test By: Lucas Xu	H

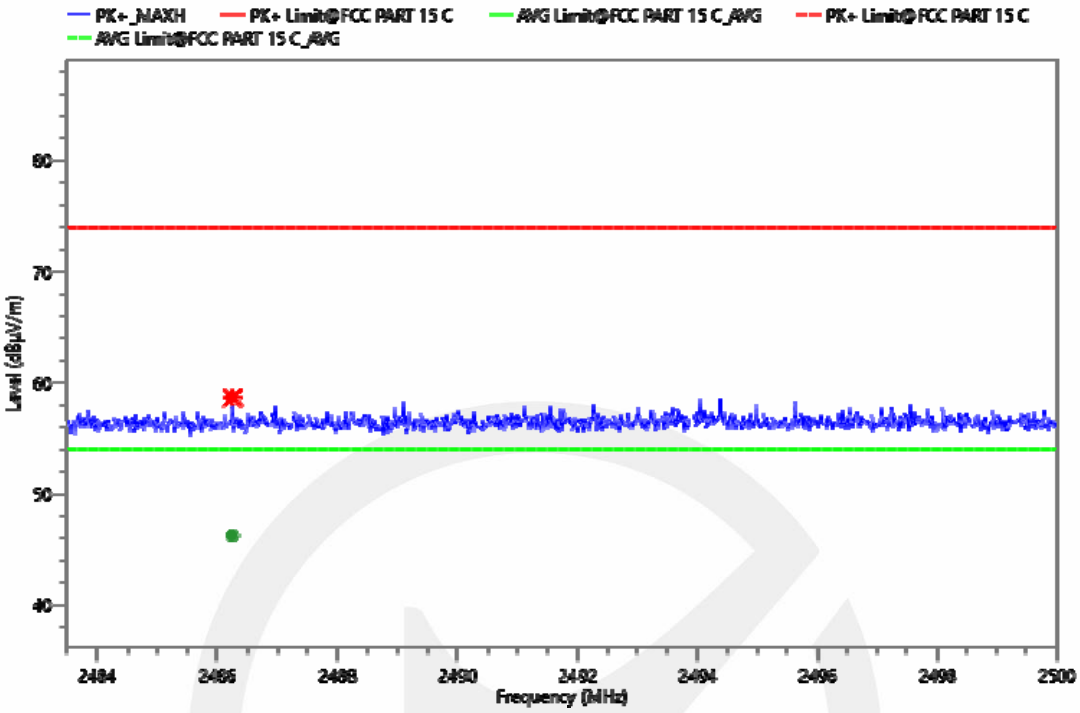

Test Model	Band Emissions High Test By: Lucas Xu	V

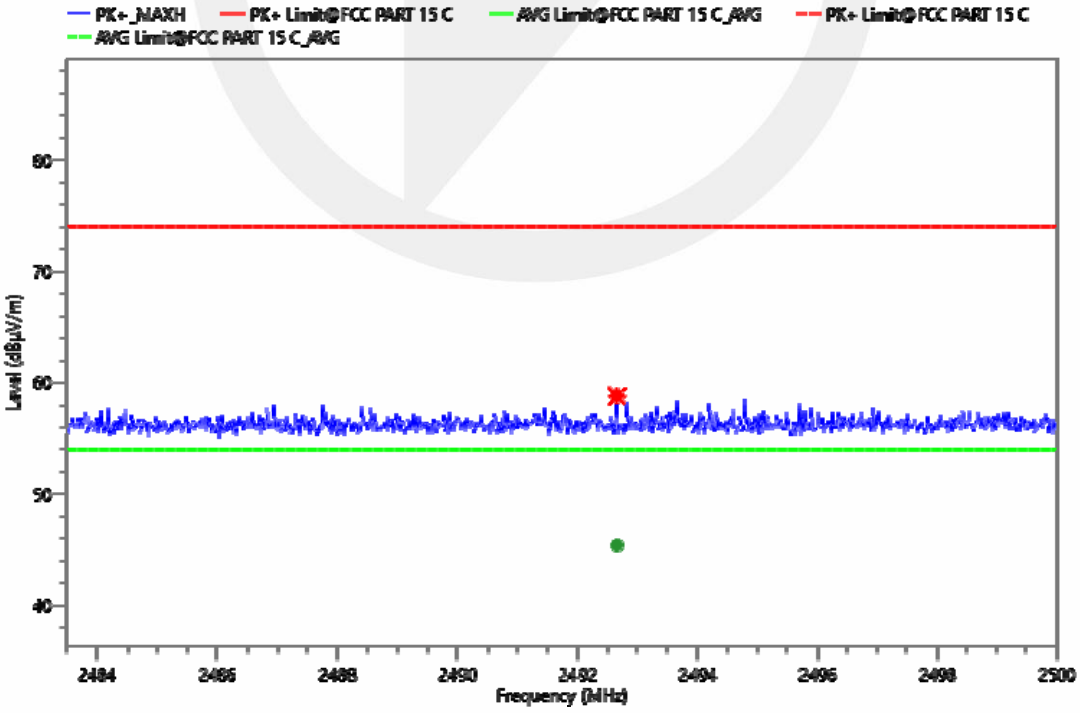

- Spurious Emission below 1GHz (30MHz to 1GHz)
- All modes have been tested, and the worst result recorded was report as below:

Project Information			
Mode:	TX2423	Voltage:	AC 120V/60Hz
Environment:	Temp: 18℃; Humi:67%	Engineer:	Lucas Xu

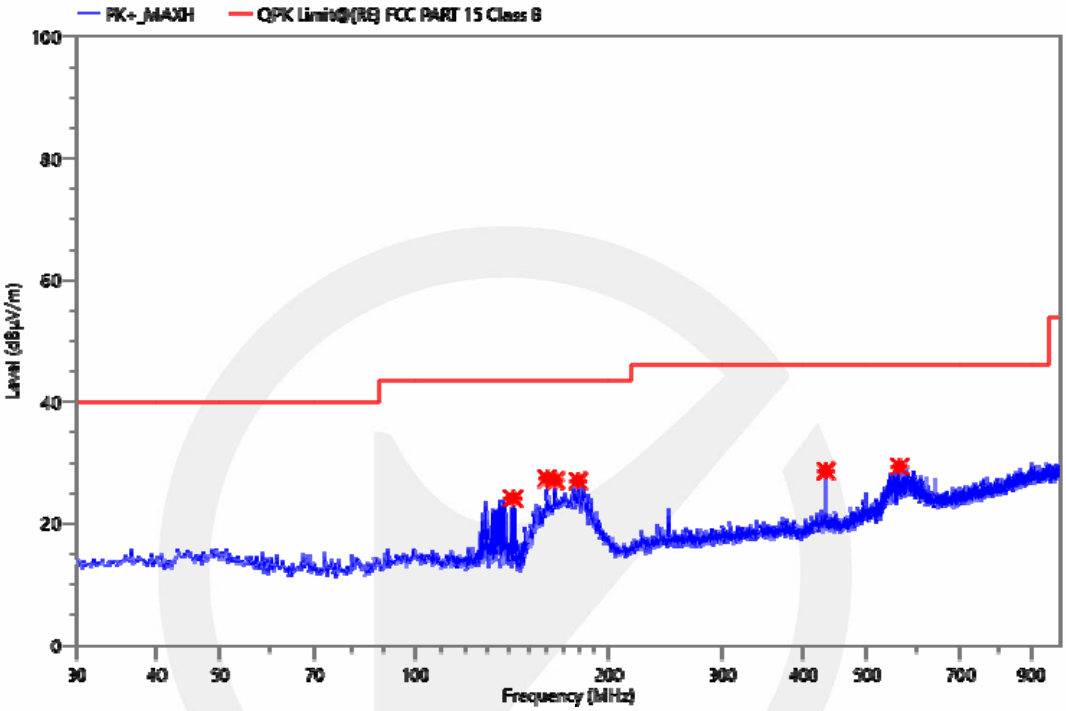

No.	Freq. (MHz)	Reading (dBµV)	Corr. (dB)	Meas. (dBµV/m)	Limit (dBµV/m)	Margin (dB)	Det.	Height (cm)	Pol.	Azimuth (deg)	Verdict
1	141.841	51.49	-27.35	24.14	43.50	19.36	QPK	100	V	119.2	PASS
2	159.980	53.82	-26.39	27.43	43.50	16.07	QPK	100	V	281.7	PASS
3	164.927	53.43	-26.31	27.12	43.50	16.38	QPK	200	V	0.0	PASS
4	179.089	52.90	-25.89	27.01	43.50	16.49	QPK	100	V	240.6	PASS
5	433.035	47.21	-18.56	28.65	46.00	17.35	QPK	200	V	318.6	PASS
6	562.239	44.62	-15.29	29.33	46.00	16.67	QPK	100	V	199.6	PASS

Project Information			
Mode:	TX2423	Voltage:	AC 120V/60Hz
Environment:	Temp: 18℃; Humi:67%	Engineer:	Lucas Xu

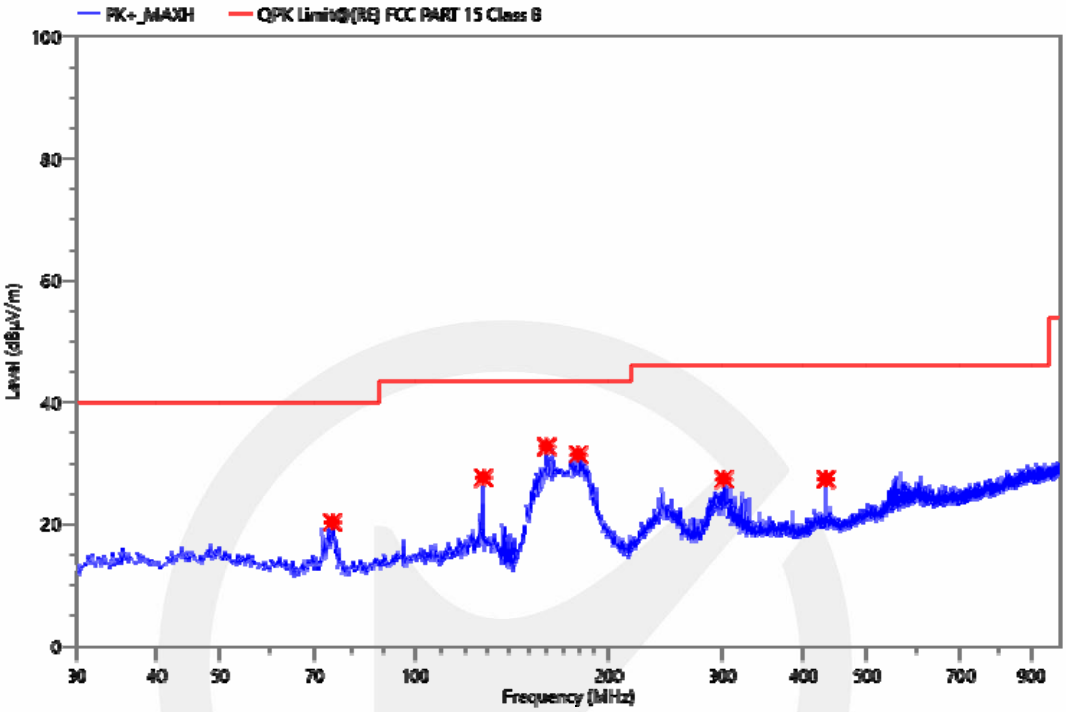

No.	Freq. (MHz)	Reading (dBµV)	Corr. (dB)	Meas. (dBµV/m)	Limit (dBµV/m)	Margin (dB)	Det.	Height (cm)	Pol.	Azimuth (deg)	Verdict
1	74.620	46.83	-26.48	20.35	40.00	19.65	QPK	200	H	151.9	PASS
2	127.970	54.82	-27.17	27.65	43.50	15.85	QPK	200	H	151.9	PASS
3	159.980	59.14	-26.39	32.75	43.50	10.75	QPK	200	H	325.7	PASS
4	179.283	57.32	-25.88	31.44	43.50	12.06	QPK	200	H	334.0	PASS
5	301.406	49.35	-21.93	27.42	46.00	18.58	QPK	100	H	102.2	PASS
6	433.035	45.99	-18.56	27.43	46.00	18.57	QPK	100	H	329.0	PASS

Project Information			
Mode:	TX2470	Voltage:	AC 120V/60Hz
Environment:	Temp: 18℃; Humi:67%	Engineer:	Lucas Xu

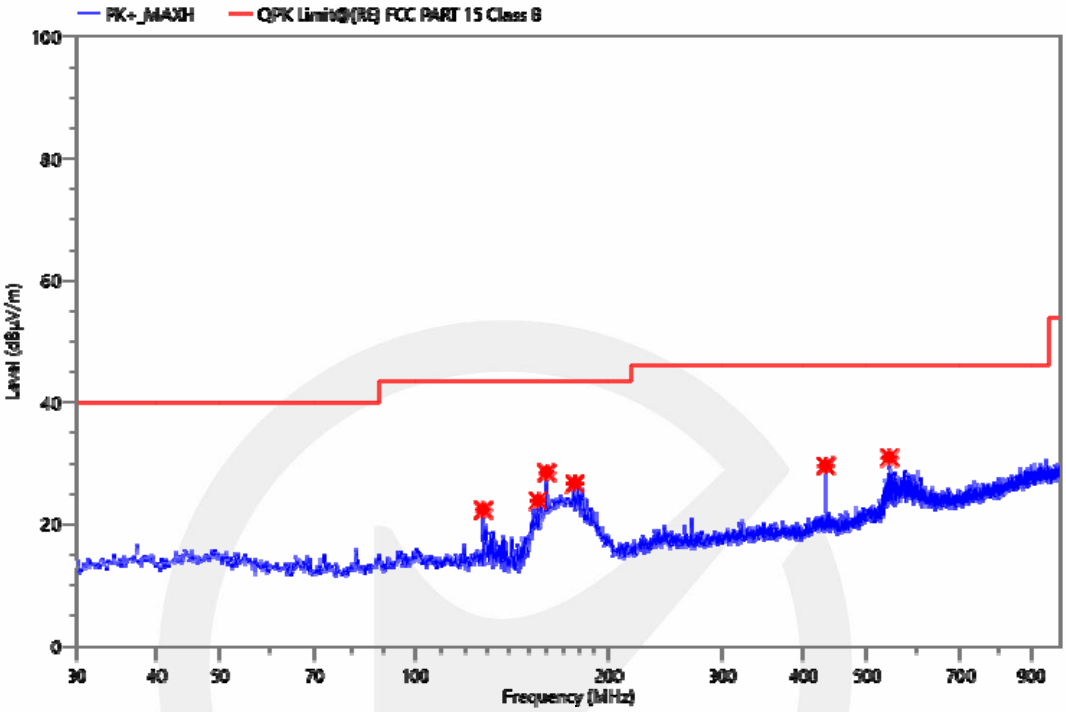

No.	Freq. (MHz)	Reading (dBµV)	Corr. (dB)	Meas. (dBµV/m)	Limit (dBµV/m)	Margin (dB)	Det.	Height (cm)	Pol.	Azimuth (deg)	Verdict
1	127.970	49.52	-27.17	22.35	43.50	21.15	QPK	200	V	239.2	PASS
2	155.130	50.52	-26.66	23.86	43.50	19.64	QPK	200	V	58.9	PASS
3	159.980	54.87	-26.39	28.48	43.50	15.02	QPK	100	V	270.2	PASS
4	176.955	52.66	-25.97	26.69	43.50	16.81	QPK	100	V	249.9	PASS
5	433.035	48.18	-18.56	29.62	46.00	16.38	QPK	100	V	89.8	PASS
6	542.063	46.93	-15.98	30.95	46.00	15.05	QPK	100	V	194.0	PASS

Project Information			
Mode:	TX2470	Voltage:	AC 120V/60Hz
Environment:	Temp: 18℃; Humi:67%	Engineer:	Lucas Xu

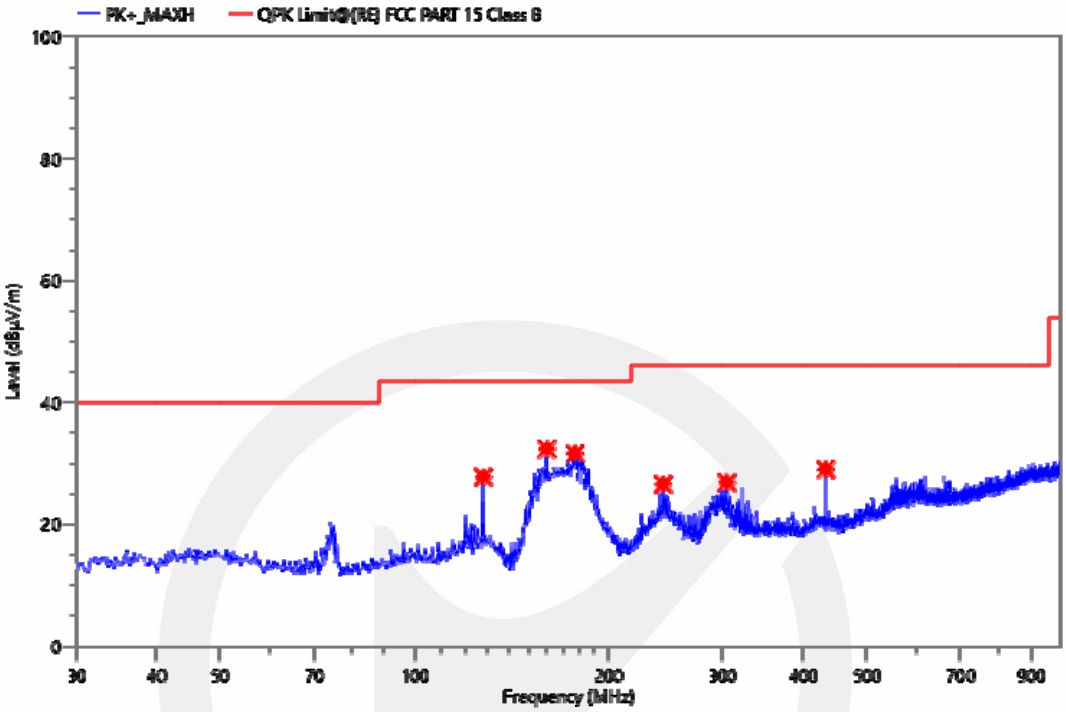

No.	Freq. (MHz)	Reading (dBµV)	Corr. (dB)	Meas. (dBµV/m)	Limit (dBµV/m)	Margin (dB)	Det.	Height (cm)	Pol.	Azimuth (deg)	Verdict
1	127.970	54.94	-27.17	27.77	43.50	15.73	QPK	200	H	148.2	PASS
2	159.980	58.76	-26.39	32.37	43.50	11.13	QPK	200	H	314.9	PASS
3	177.052	57.59	-25.97	31.62	43.50	11.88	QPK	200	H	320.8	PASS
4	242.236	49.28	-22.71	26.57	46.00	19.43	QPK	100	H	198.7	PASS
5	304.801	48.59	-21.75	26.84	46.00	19.16	QPK	100	H	114.8	PASS
6	433.035	47.58	-18.56	29.02	46.00	16.98	QPK	200	H	114.3	PASS

■ Spurious Emission Above 1GHz (1GHz to 25GHz)

Test mode: GFSK Frequency: Channel : 2423 MHz

Freq. (MHz)	Ant.Pol. H/V	Emission Level(dBuV/m) PK	Emission Level(dBuV/m) AV	Limit 3m(dBuV/m) PK	Limit 3m(dBuV/m) AV	Over(dB) PK	Over(dB) AV
4845.500	V	44.39	30.25	74	54	-29.61	-23.75
7268.500	V	47.93	34.16	74	54	-26.07	-19.84
17920.00	V	54.68	40.71	74	54	-19.32	-13.29
4846.000	H	49.98	34.16	74	54	-24.02	-19.84
7270.000	H	49.29	35.12	74	54	-24.71	-18.88
13948.50	H	53.82	40.23	74	54	-20.18	-13.77

Test mode: GFSK Frequency: Channel : 2470 MHz

Freq. (MHz)	Ant.Pol. H/V	Emission Level(dBuV/m) PK	Emission Level(dBuV/m) AV	Limit 3m(dBuV/m) PK	Limit 3m(dBuV/m) AV	Over(dB) PK	Over(dB) AV
4940.500	V	46.04	32.45	74	54	-27.96	-21.55
7411.000	V	48.07	35.28	74	54	-25.93	-18.72
17922.00	V	55.00	41.26	74	54	-19.00	-12.74
4939.500	H	49.37	35.81	74	54	-24.63	-18.19
7409.500	H	49.25	36.12	74	54	-24.75	-17.88
17966.00	H	55.10	43.16	74	54	-18.90	-10.84

Note: (1) All Readings are Peak Value (VBW=3MHz) and Average Value (VBW=10Hz).
(2) Emission Level= Reading Level+Correct Factor +Cable Loss.
(3) Correct Factor= Ant_F + Cab_L - Preamp
(4) The reading of emissions are attenuated more than 20dB below the permissible limits or the field strength is too small to be measured.

8.3 CONDUCTED EMISSIONS TEST

8.3.1 Applicable Standard

According to FCC Part 15.207(a)

8.3.2 Conformance Limit

Conducted Emission Limit		
Frequency(MHz)	Quasi-peak	Average
0.15-0.5	66-56	56-46
0.5-5.0	56	46
5.0-30.0	60	50

Note: 1. The lower limit shall apply at the transition frequencies
2. The limit decreases in line with the logarithm of the frequency in the range of 0.15 to 0.50MHz.

8.3.3 Test Configuration

Test according to clause 7.3 conducted emission test setup

8.3.4 Test Procedure

The EUT was placed on a table which is 0.8m above ground plane.
Maximum procedure was performed on the highest emissions to ensure EUT compliance.
Repeat above procedures until all frequency measured were complete.

8.3.5 Test Results

Pass.
All modes have been tested, and the worst result recorded was report as below:

Project Information			
Mode:	TX2423	Voltage:	AC 120V/60Hz
Environment:	Temp: 24℃; Humi:38%	Engineer:	Ace Li

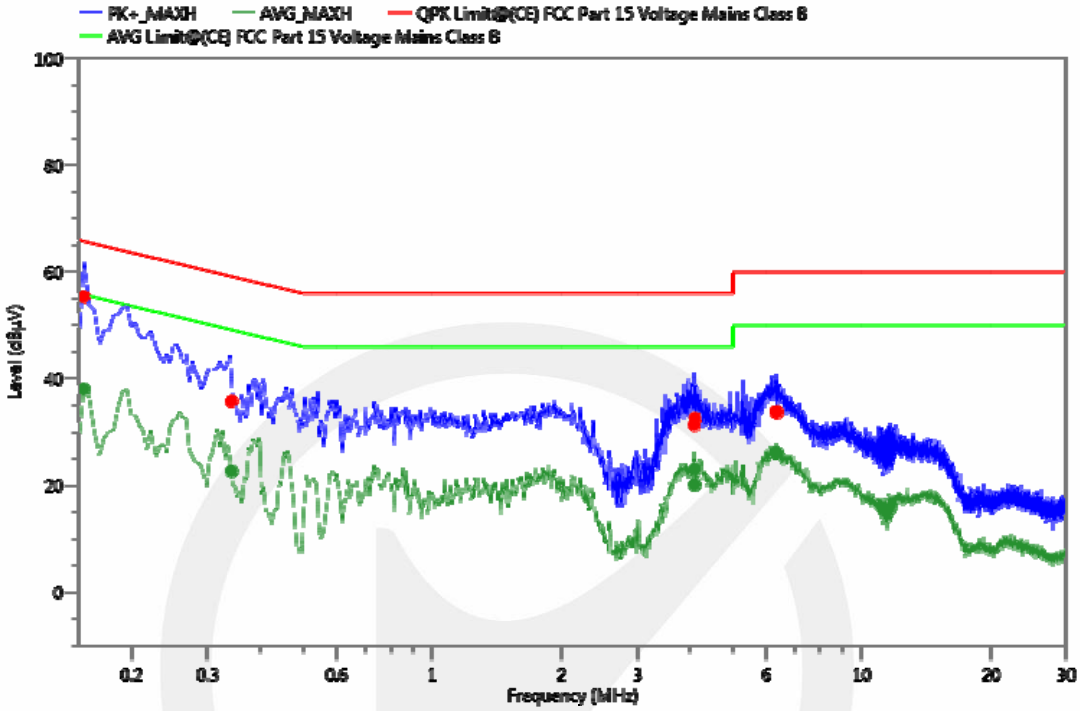

No.	Freq. (MHz)	Reading (dBµV)	Corr. (dB)	Meas. (dBµV)	Limit (dBµV)	Margin (dB)	Det.	Line	PE	Verdict
1	0.154	45.21	10.11	55.32	65.78	10.46	QPK	N	GND	PASS
2	0.154	27.88	10.11	37.99	55.78	17.79	AVG	N	GND	PASS
3	0.341	25.69	10.07	35.76	59.18	23.42	QPK	N	GND	PASS
4	0.341	12.58	10.07	22.65	49.18	26.53	AVG	N	GND	PASS
5	4.085	21.28	10.03	31.31	56.00	24.69	QPK	N	GND	PASS
6	4.085	10.06	10.03	20.09	46.00	25.91	AVG	N	GND	PASS
7	4.099	22.49	10.03	32.52	56.00	23.48	QPK	N	GND	PASS
8	4.099	12.98	10.03	23.01	46.00	22.99	AVG	N	GND	PASS
9	6.306	23.79	10.03	33.82	60.00	26.18	QPK	N	GND	PASS
10	6.306	16.03	10.03	26.06	50.00	23.94	AVG	N	GND	PASS
11	6.337	23.62	10.03	33.65	60.00	26.35	QPK	N	GND	PASS
12	6.337	16.03	10.03	26.06	50.00	23.94	AVG	N	GND	PASS

Project Information			
Mode:	TX2423	Voltage:	AC 120V/60Hz
Environment:	Temp: 24℃; Humi:38%	Engineer:	Ace Li

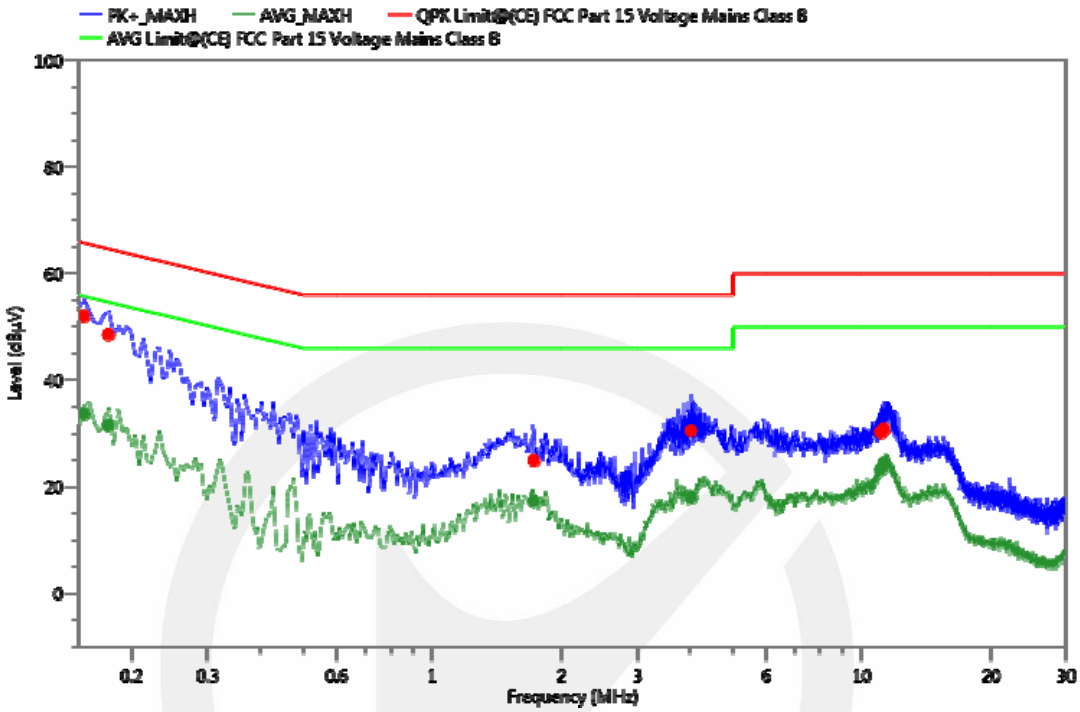

No.	Freq. (MHz)	Reading (dBµV)	Corr. (dB)	Meas. (dBµV)	Limit (dBµV)	Margin (dB)	Det.	Line	PE	Verdict
1	0.154	41.92	10.11	52.03	65.78	13.75	QPK	L1	GND	PASS
2	0.154	23.55	10.11	33.66	55.78	22.12	AVG	L1	GND	PASS
3	0.176	38.48	10.1	48.58	64.67	16.09	QPK	L1	GND	PASS
4	0.176	21.39	10.1	31.49	54.67	23.18	AVG	L1	GND	PASS
5	1.721	14.83	10.08	24.91	56.00	31.09	QPK	L1	GND	PASS
6	1.721	7.17	10.08	17.25	46.00	28.75	AVG	L1	GND	PASS
7	4.013	20.40	10.03	30.43	56.00	25.57	QPK	L1	GND	PASS
8	4.013	7.91	10.03	17.94	46.00	28.06	AVG	L1	GND	PASS
9	11.052	20.06	10.09	30.15	60.00	29.85	QPK	L1	GND	PASS
10	11.052	13.09	10.09	23.18	50.00	26.82	AVG	L1	GND	PASS
11	11.258	20.70	10.09	30.79	60.00	29.21	QPK	L1	GND	PASS
12	11.258	14.35	10.09	24.44	50.00	25.56	AVG	L1	GND	PASS

8.4 ANTENNA APPLICATION

8.4.1 Antenna Requirement

Standard	Requirement
FCC CRF Part 15.203	An intentional radiator shall be designed to ensure that no antenna other than that furnished by the responsible party shall be used with the device. The use of a permanently attached antenna or of an antenna that uses a unique coupling to the intentional radiator shall be considered sufficient to comply with the provisions of this section. The manufacturer may design the unit so that a broken antenna can be replaced by the user, but the use of a standard antenna jack or electrical connector is prohibited. This requirement does not apply to carrier current devices or to devices operated under the provisions of §15.211, §15.213, §15.217, §15.219, or §15.221. Further, this requirement does not apply to intentional radiators that must be professionally installed, such as perimeter protection systems and some field disturbance sensors, or to other intentional radiators which, in accordance with §15.31(d), must be measured at the installation site. However, the installer shall be responsible for ensuring that the proper antenna is employed so that the limits in this part are not exceeded.

For intentional device, according to FCC 47 CFR Section 15.203, an intentional radiator shall be designed to ensure that no antenna other than that furnished by the responsible party shall be used with the device.

8.4.2 Result

PASS.

The EUT has 1 antenna: a PCB Antenna gain is 4.65 dBi.

Note:
- ☒ Antenna use a permanently attached antenna which is not replaceable.
- ☐ Not using a standard antenna jack or electrical connector for antenna replacement
- ☐ The antenna has to be professionally installed (please provide method of installation)

which in accordance to section 15.203, please refer to the internal photos.

*** End of Report ***

声 明
Statement

1. 本报告无授权批准人签字及“检验检测专用章”无效；
   This report will be void without authorized signature or special seal for testing report.

2. 未经许可本报告不得部分复制；
   This report shall not be copied partly without authorization.

3. 本报告的检测结果仅对送测样品有效，委托方对样品的代表性和资料的真实性负责；
   The test results or observations are applicable only to tested sample. Client shall be responsible for representativeness of the sample and authenticity of the material.

4. 本检测报告中检测项目标注有特殊符号则该项目不在资质认定范围内，仅作为客户委托、科研、教学或内部质量控制等目的使用；
   The observations or tests with special mark fall outside the scope of accreditation, and are only used for purpose of commission, research, training, internal quality control etc.

5. 本检测报告以实测值进行符合性判定，未考虑不确定度所带来的风险，本实验室不承担相关责任，特别约定、标准或规范中有明确规定的除外；
   The test results or observations are provided in accordance with measured value, without taking risks caused by uncertainty into account. Without explicit stipulation in special agreements, standards or regulations, EMTEK shall not assume any responsibility.

6. 对本检测报告若有异议，请于收到报告之日起 20 日内提出；
   Objections shall be raised within 20 days from the date receiving the report.