smart lock

APP Bluetooth version

Tuya smart

Scan the QR code below to quickly download the app and view the installation and usage video tutorial.

Scan the code to Download Tuya App

Smart Lock installation tutorial

Tuya Smart Lock Setup Tutorial

Product introduction

User manual

Version model: B006

This user manual applies to the following two products.

Please match the corresponding function according to the appearance of the physical object and the following model.

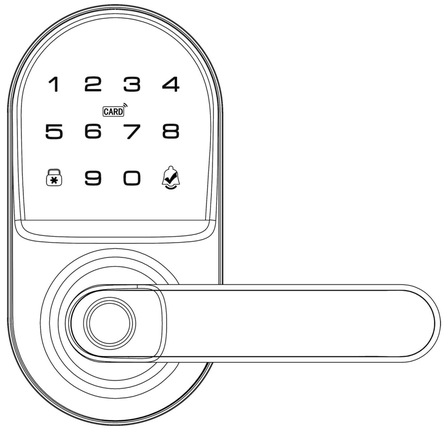

Model A (touch number)

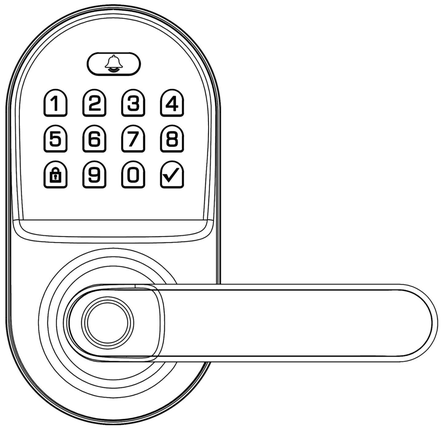

Model B (keyboard number)

Product Overview

Check the following accessories after opening the product package

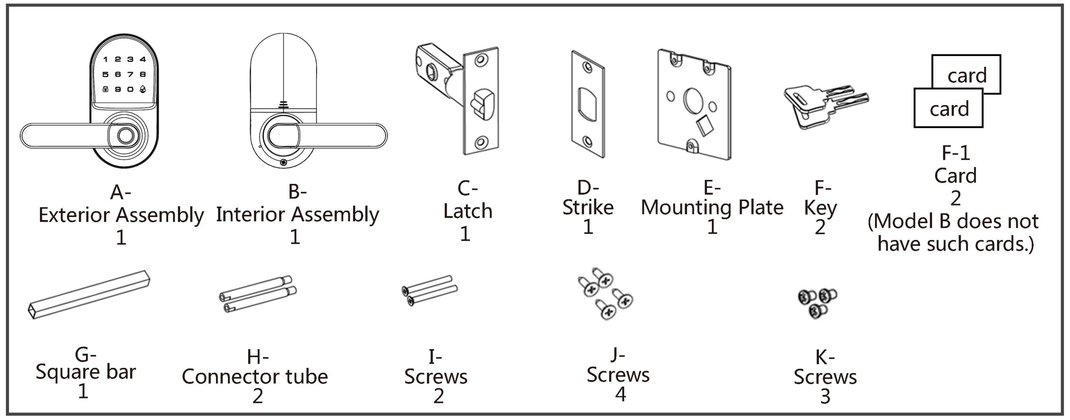

Door Lock Installation

Installation Overview:

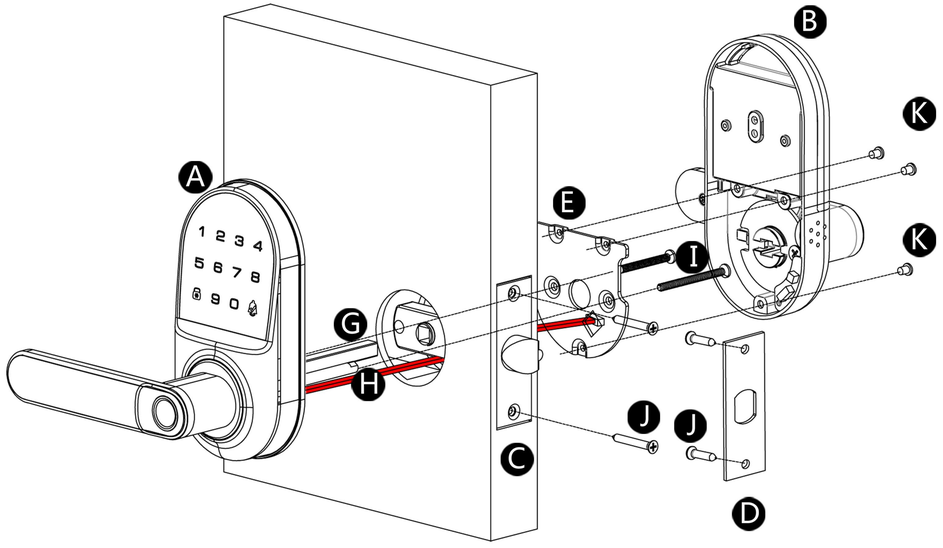

a. Prepare the door and check dimensions

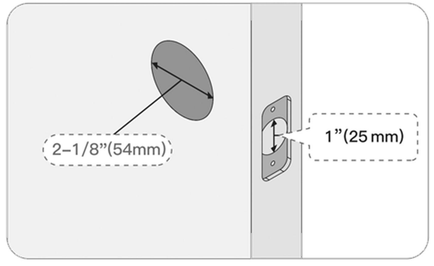

Measure to conflrm that the hole in the door is 2-1/8" (54mm)

Measure to conflrm that the hole in the door is1" (25mm)

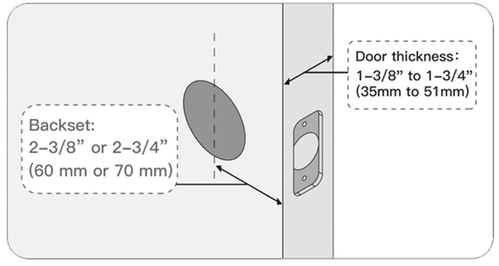

Measure to conflrm that the backset is either 2-3/8" or2-3/4" (60or70mm)

Measure to conflrm that door thickness is between 1-3/8" and1-3/4" (35-51mm)

b. Is the slotted hole centered in the door hole?

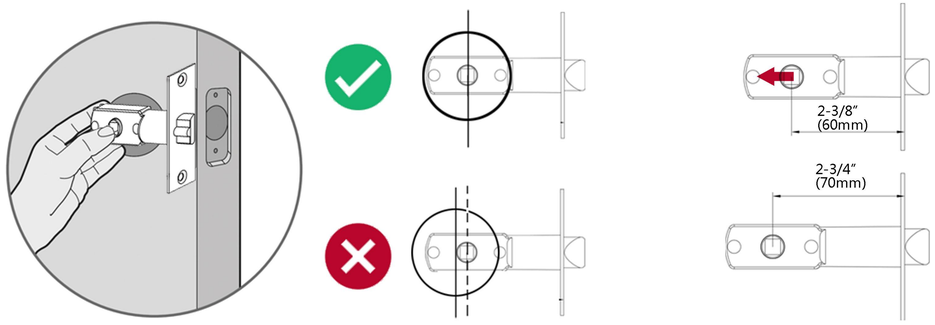

Hold down the slot and pull it backwards to adjust the 60/70 distance.

c. Install the lock tongue and striker plate

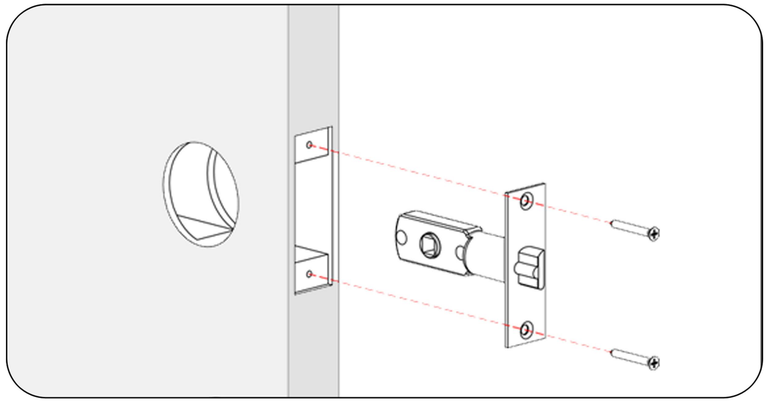

Install the latch and the strike plate on the door and door jamb with two screws each