## d. Adjust the direction of the door lock handle

When you find that the door lock handle is not in the correct direction, adjust the direction of the door lock handle according to the following operation, and then install the step. (If the handle is in the same direction as the door opening, ignore this step.)

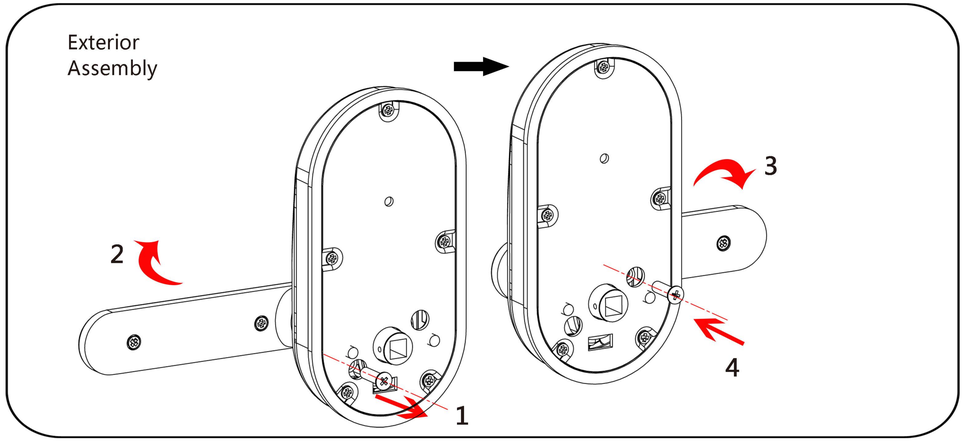


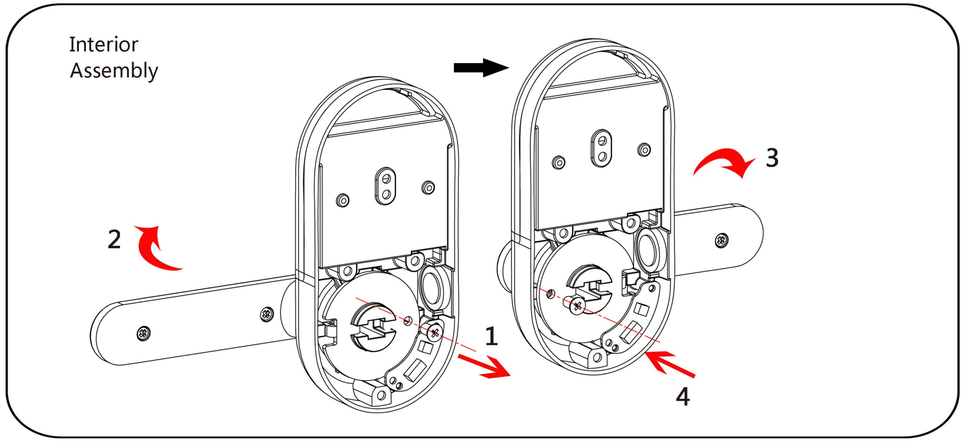


As shown in the above picture, unscrew the screw, rotate the handle 180 degrees and then screw the screw back in.



## e. Install the connecting tubes and Profile

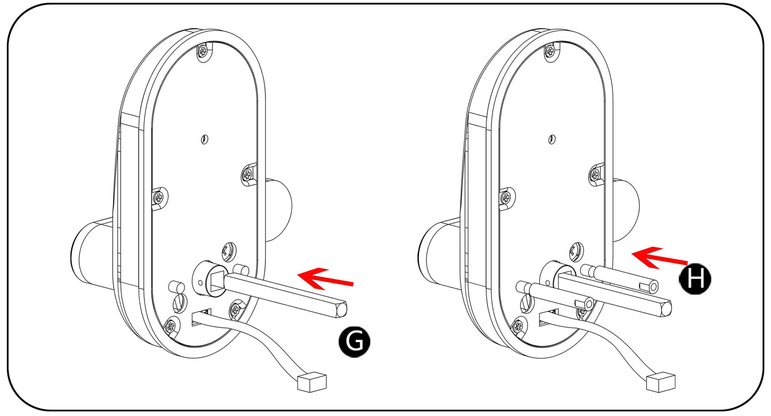


As shown in the above picture, insert the square bar G into the front component. Then, screw the two connecting pipes H into the front component

## f. Installation of front and rear components

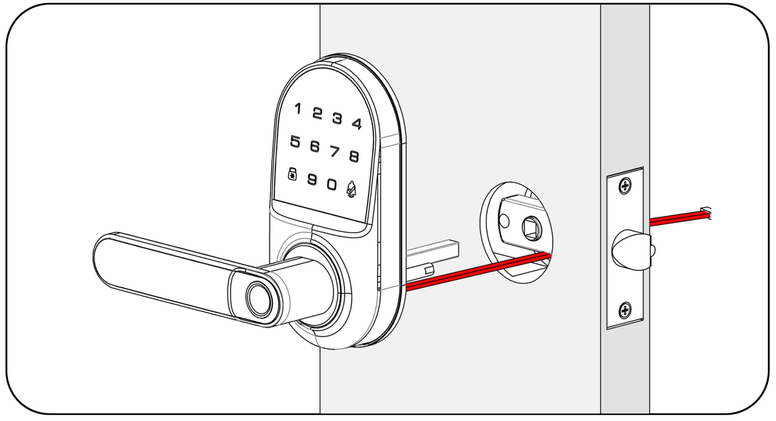


Route the cable below the latch.The square bar passes through the latch;

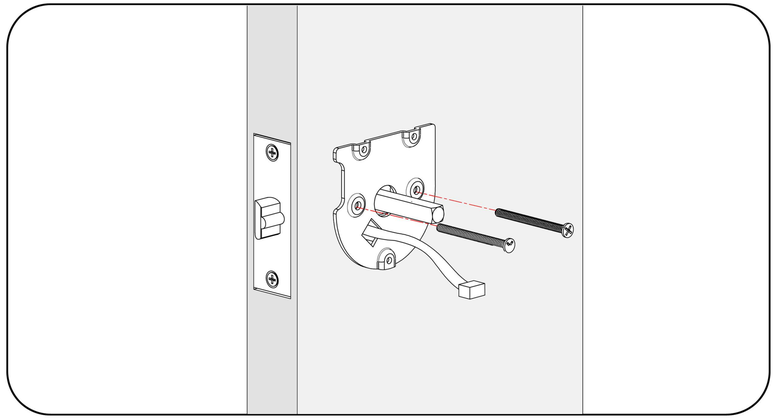

The fixed plate should be vertical parallel to the edge of the door, and the front component should be fixed to the door with two screws.

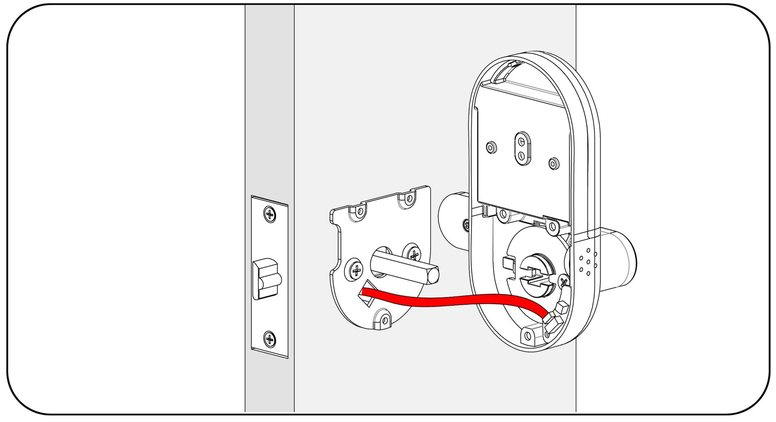

Note the plug orientation.Plug the power cord into the back component.
Tuck the excess wire neatly inside the door.



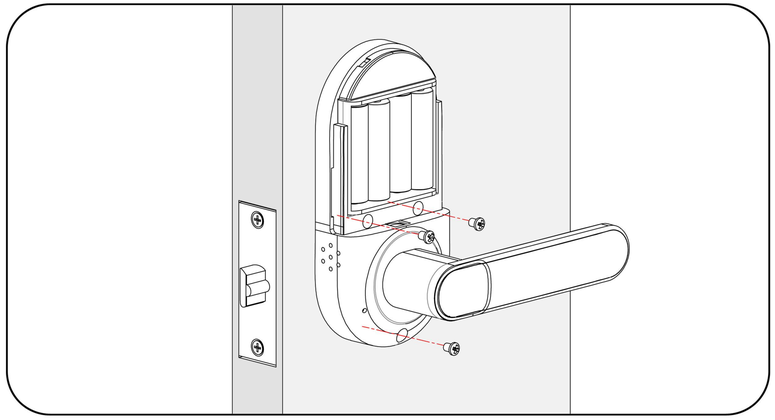

Secure the back component to the mounting plate with three screws, depress the door handle, and check if the latch can be smoothly opened. (If smoothly operable, adjust the back component up and down and then retighten the screws)

Install 4 AA batteries. Replace the battery cover, and the door lock installation is complete.

# Programming Instructions

## Product Parameters

Unlocking methods: Fingerprint/Password/APP/Key/Card(Model B no card function)
Fingerprint sensor type: Semiconductor fingerprint sensor.
User capacity: 100 fingerprints, 100 passwords.
Sensor pixels: 120*120. Fingerprint resolution: 508DPI.
False rate (FAR): <0.001%. False reject rate (FRR): <1.0%.
Unlocking time: <1 second
Operating temperature: -20-70 degrees Celsius.
Voltage range: 4-6V. Low voltage warning: 4V
Operating current: <250mA. Standby current: <=30uA.
Power supply: 4 AA alkaline batteries in the rear.
Emergency power supply: USB.

## Information and safety warnings

Do not load batteries until lock is completely installed.

1.Master PIN Code(6-10digits):The default master pin code is. "123456" ,This password will be invalid after the mobile phone is bound successfully.
2.The first mobile phone bound will become the administrator of the door lock, and the first code set in the APP will be the main code. Other codes user codes.
3. User PIN code (6-10 digits): A total of 100 user codes and 100 fingerprint users (as well as a temporary one-time user code) can be programmed.

| ITEM | SPECIFICATIONS | REMARKS |
|---|---|---|
| Battery (Using only new and non–rechagerable Alkaline betteries which for the best results.) | AA alkaline battery x4 (Operation voltage:4.6~6.0V) | Last up to one year (10 times open/close per day) |



## Introduction to the function

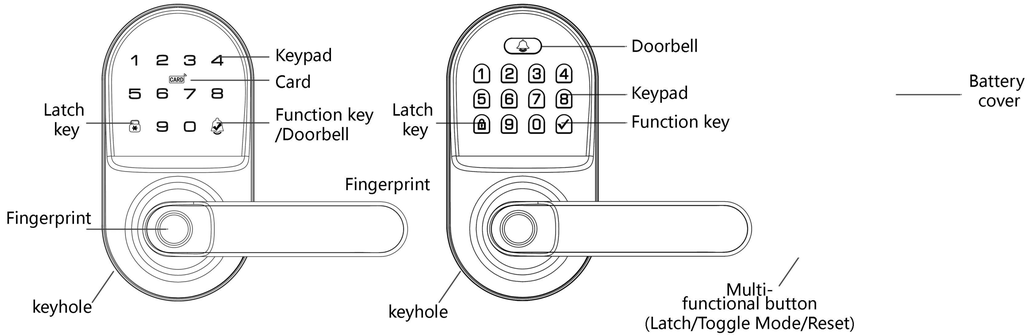


Model A (touch number) Model B (keyboard number) Interior Assembly

### Function key usage instructions:

| | |
|---|---|
| / | Lock key: for locking in channel mode |
| | Function key/Doorbell: To be used as doorbell, confirmation code and operation confirmation |
| | Doorbell: Doorbell |
| | Function key: confirm password and operation confirmation; |
| ● | Multi-functional button: 1. Press once to lock. 2. Press and hold for 3-5 seconds until you hear a beep, then switch to channel mode. 3. Press and hold for more than 9 seconds until a prompt tone sounds, then press the key on the front panel to confirm and restore factory settings. |

## Definitions

**Master code:**
Required for programming and feature settings,Master code can be used to unlocked the door under vacation mode.The default master code needs to be changed before programming.(Property owner/manaher should keep this informayion confldential.)

**Auto lock:**
Automatically locks 5 seconds after unlocking. This function is enabled by default. You can set it to Passage mode in the APP or in the quick setting.

**Passage mode:**
When unlocking in channel mode, the door lock will remain open until you press the lock key to lock it. Unless you switch back to auto mode

**Silent mode:**
In silent mode, the unlock key and the prompt sound will be turned off. However, you will still hear the low battery prompt and the prompt sound set

**Vacation mode:**
This is a security feature for you when you are leaving your home for vacation or long trip. Enabling vacation mode will restrict all user codes until master code is entered on keypad. If the lock is unlocked by thumb turn, the lock will sound an alarm.

**One time user code:**
This code can only be used once and is automatically deleted when used.

**Unlock with fake code:**
User can prevent PIN code exposure strangers by entering random digits before or after PIN code.

83618 137192 14710
PASSWORD
RANDOM DIGITS