Smart lock

Installation Guide / Programming Instructions

Powered by tuya Intelligence Inside

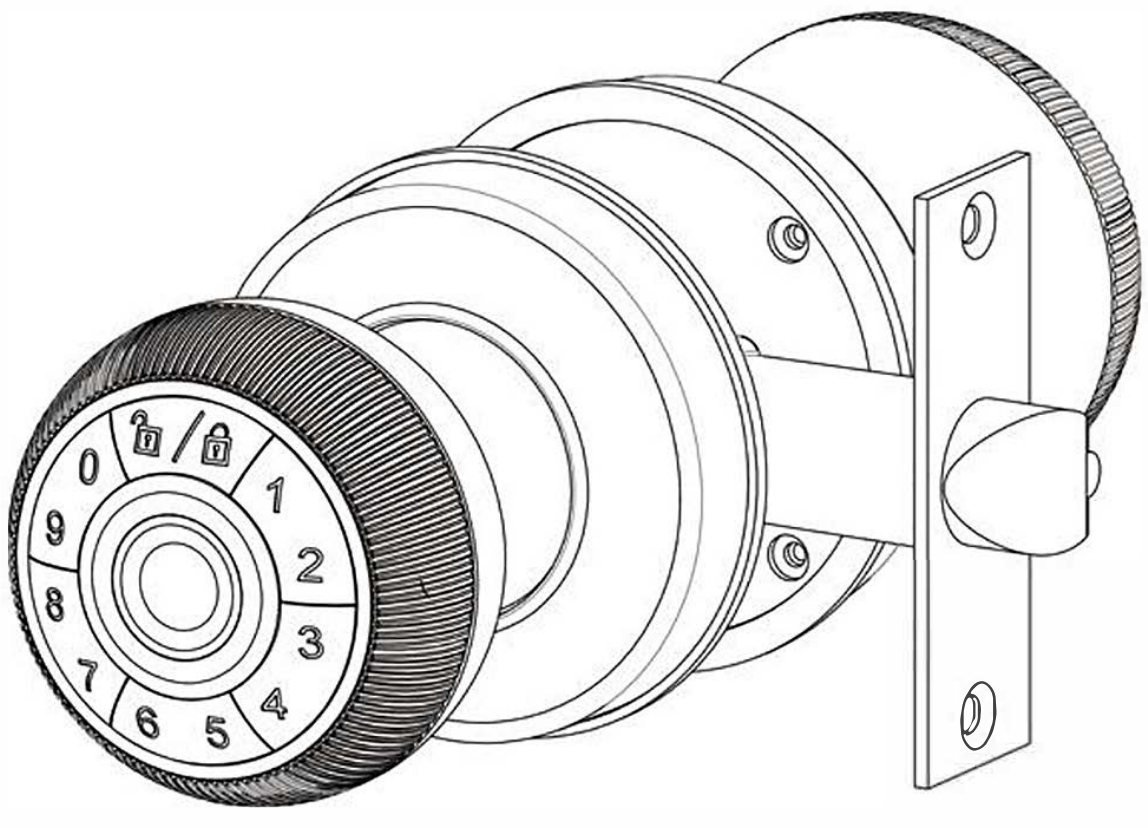

Installation Video

Operation Video

Scan the code to Download Tuya App

Thank you for purchasing our products. Please review this manual thoroughly before operating your device. All pictures in this manual are for illustration purpose only. Actual product may vary due to product upgrade.

Installation Overview

Please read this manual carefully before installation and operation!

TOOL REQUIRED: Do not use an electric screwdriver during installation.

P3 Installation Overview
P4 STEP 1 . Check accessories
P5 STEP2 . Prepare the door and check dimensions
P6 STEP3 . Install the latch and buckle box
P7 STEP4 . Components before and after installation
P8 STEP5 . Components before and after installation

PROGRAMMING INSTRUCTIONS

P9 Function demonstration
P10 Product parameters
P11 How to use
P12 Definitions
P13 How to program
P14 Programming step 1.App downloads and accounts
P15-18 Programming step 2.App usage method
P19 Programming step 3.How to delete admin and user
P20 Programming step 4.Fast programming
P21 Troubleshooting
P22 Information & Safety Warnings

INSTALLATION OVERVIEW

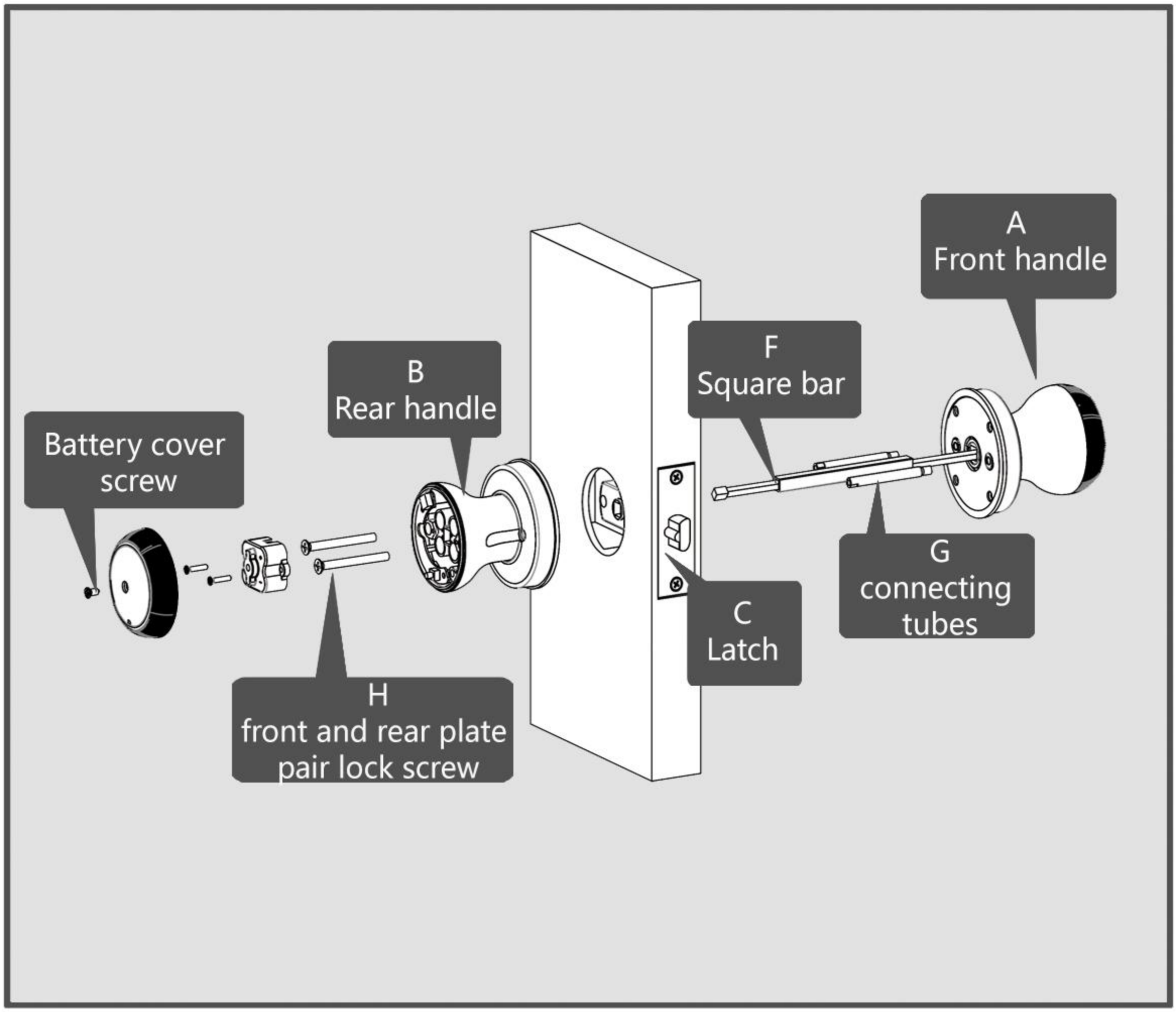

STEP 1 . Check accessories

Please make sure that all parts are included
when unpacking the product.

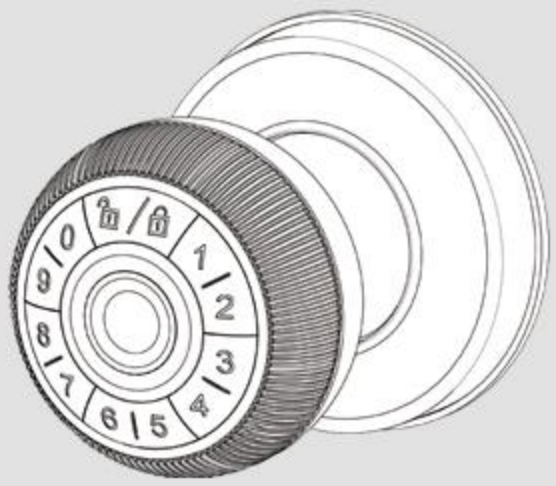

A
Front handle
(1)

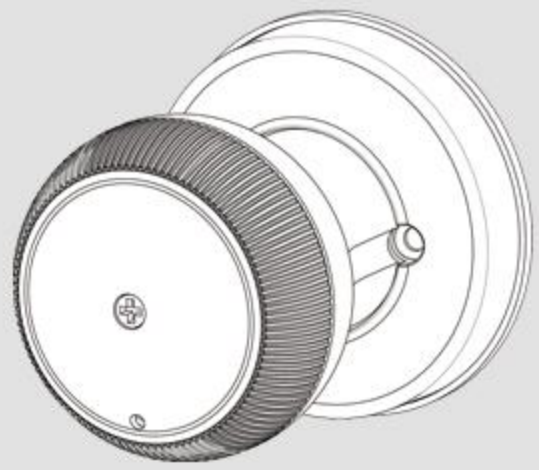

B
Rear handle
(1)

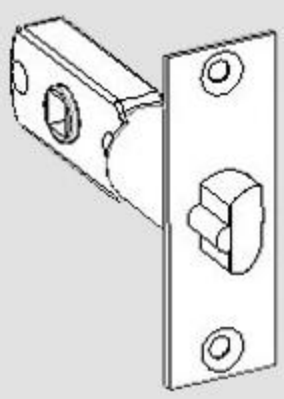

C
Latch
(1)

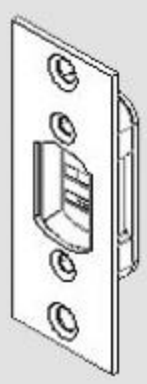

D
buckle plate (1)
buckle box (1)

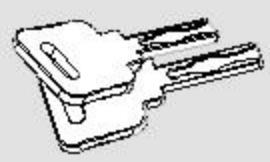

E
keys
(2)

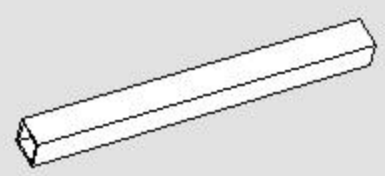

F
Square bar
(1)

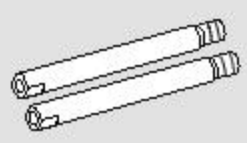

G
connecting
tubes (2)

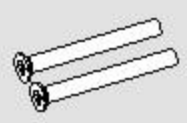

H
front and rear plate
pair lock screw (2)

I
tapping
screws (4)

J
Reset tool
(1)

STEP2 . Prepare the door and check dimensions

A Measure to confirm that the hole in the door is 2-1/8" (54mm).
Measure to confirm that the hole in the door edge is 1" (25mm).

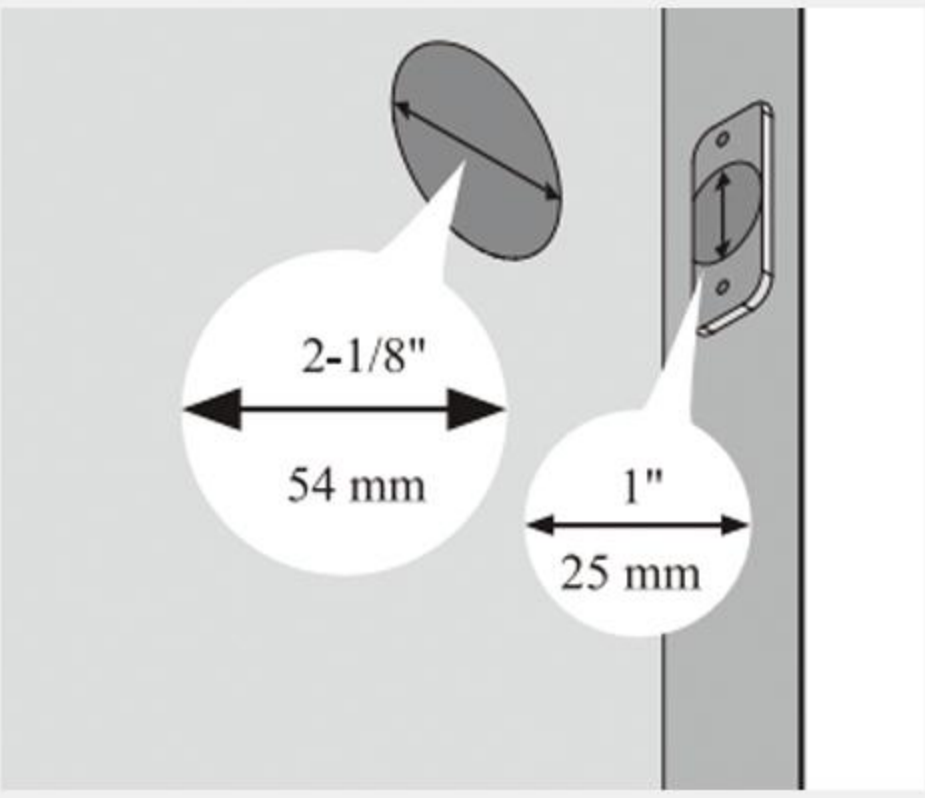

B Measure to confirm that the backset is either 2-3/8" or 2-3/4" (60 or 70mm)

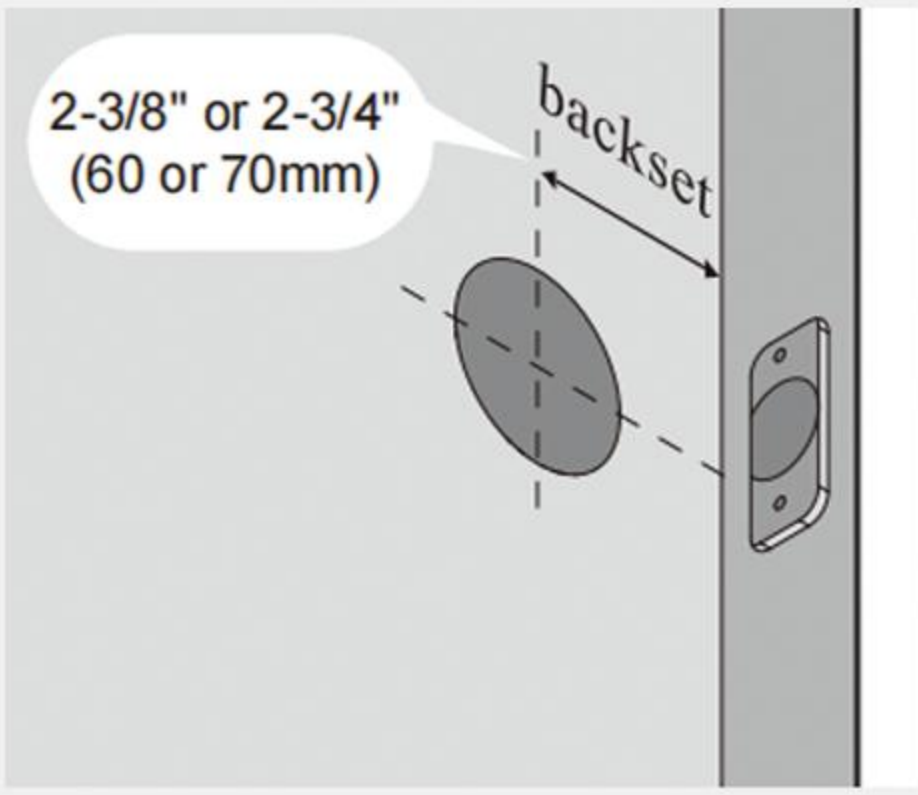

C Measure to confirm that the door is 1-3/8" to 2" (35 mm or 50mm) thick.

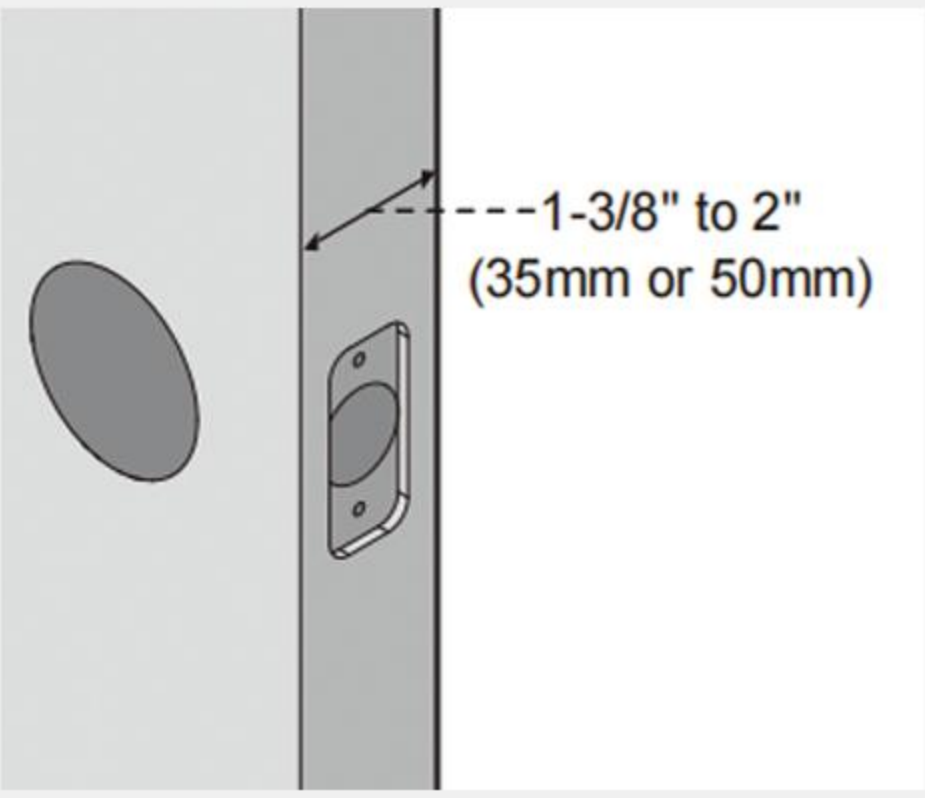

D Make sure the hole in door frame is drilled a minimum of 1" (25mm) deep.

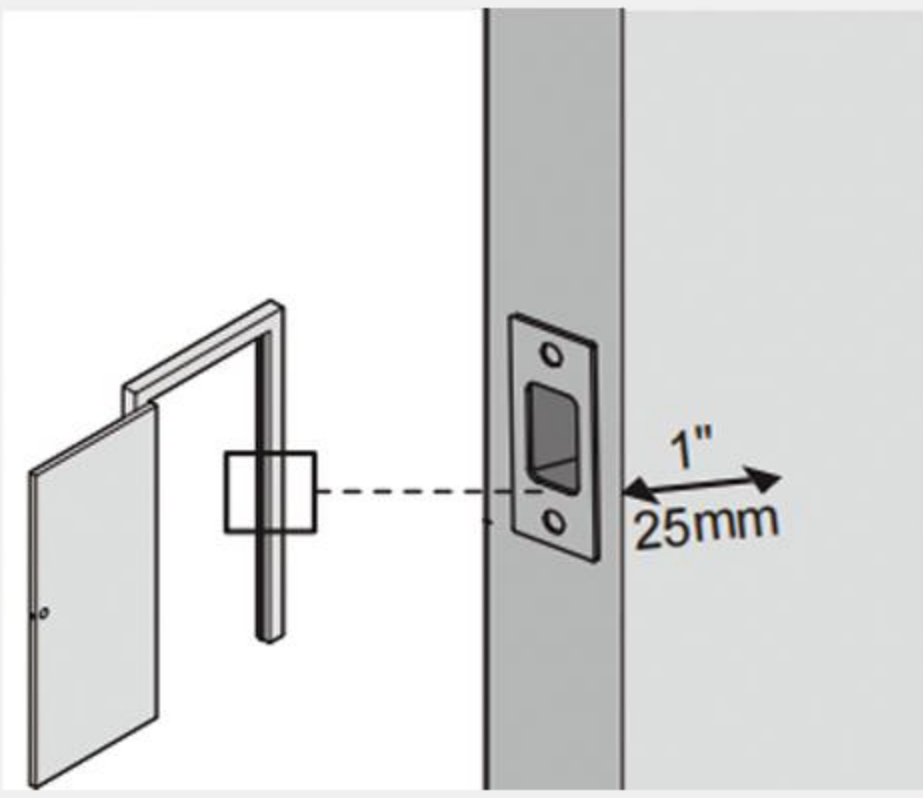

STEP3 . Install the latch and buckle box

A Adjust the latch to 60mm or 70mm according to the position of the hole in the door

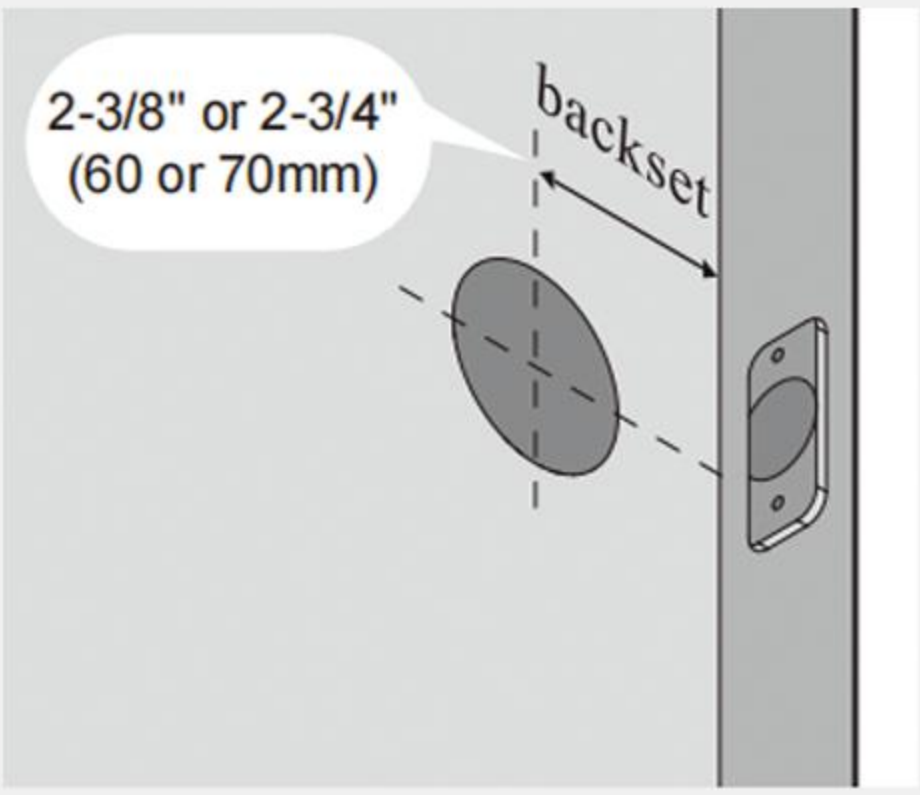

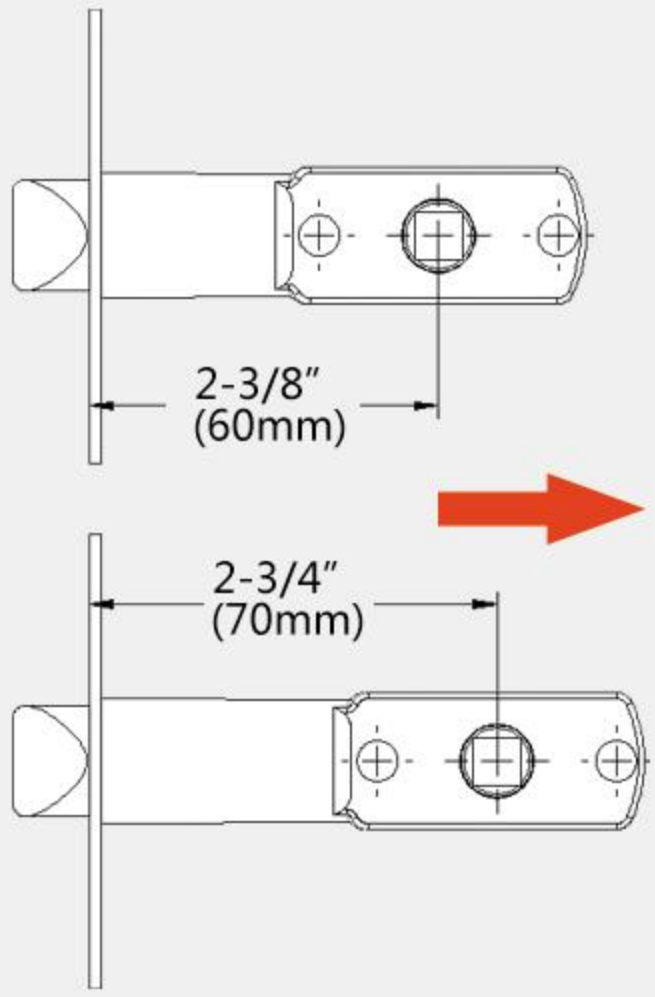

B Secure the latch (C) and buckle box (D) to the corresponding holes in the opened door with 2*tapping screws (I).

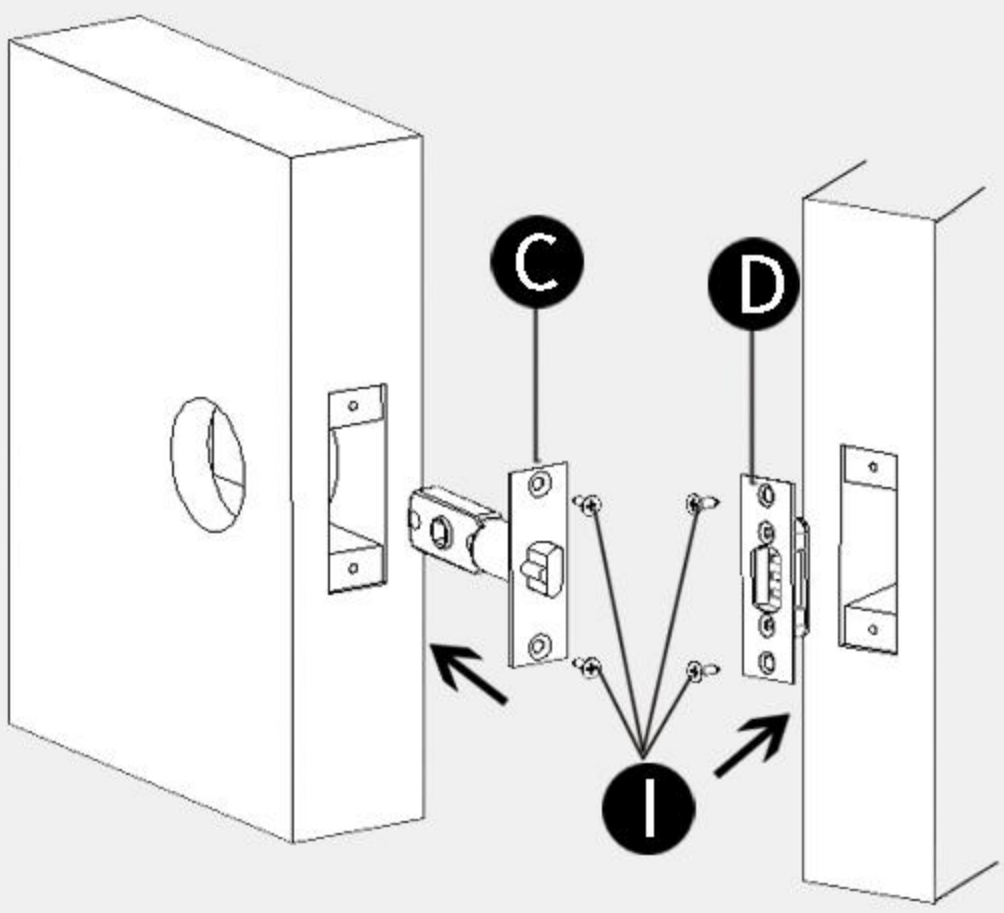

IMPORTANT:

Make sure the hole in door frame is drilled a minimum of 1" (25mm) deep.

STEP4 . Components before and after installation

A Place the square rod (F) over the front handle (A) through the power cord. Tighten two connecting tubes (G) onto the front panel (A) . Open the rear handle (B) with a screwdriver and remove the spare battery cover.

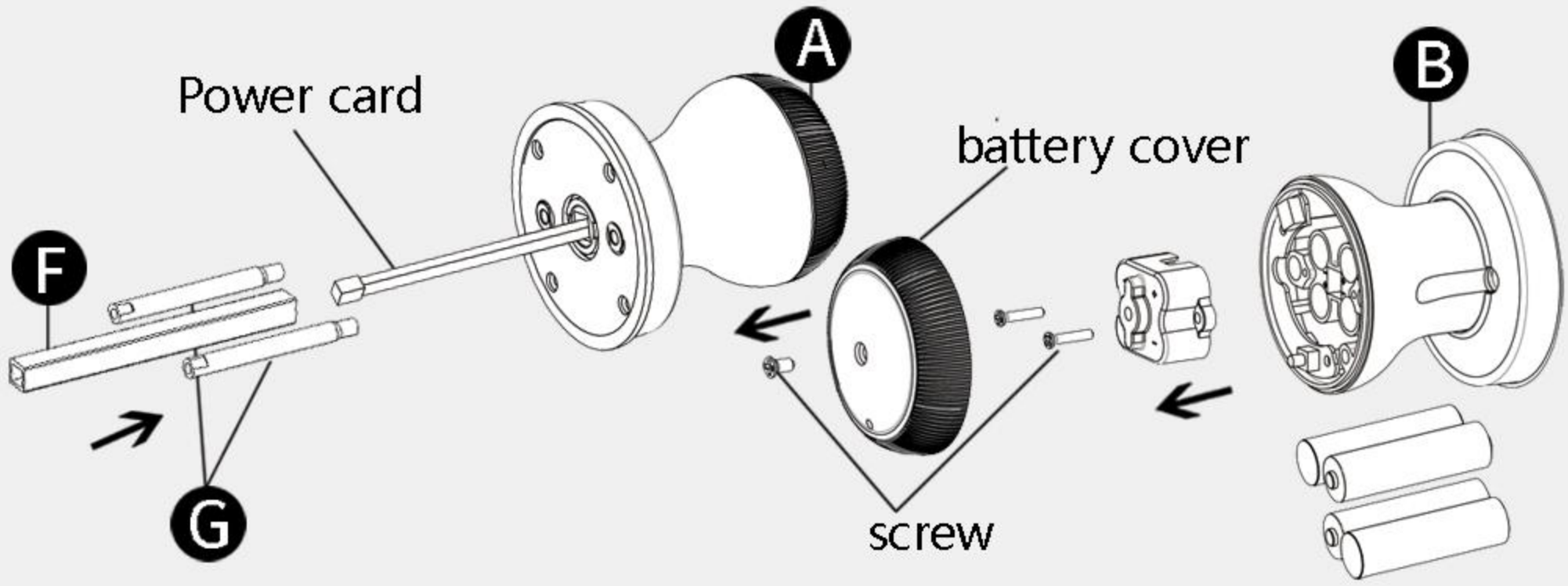

B Put front and rear handles (A, B) on the door respectively, square bar (F) through the latch (C) to connect with front and rear handles. The power cord is threaded through rear handle (B) and inserted through the rear panel with two pairs of locking screws (H) to lock the connecting tube (G) on front panel.Secure the front and rear handles to the door.(After turning the rear hand, test whether the switch latch is smooth)

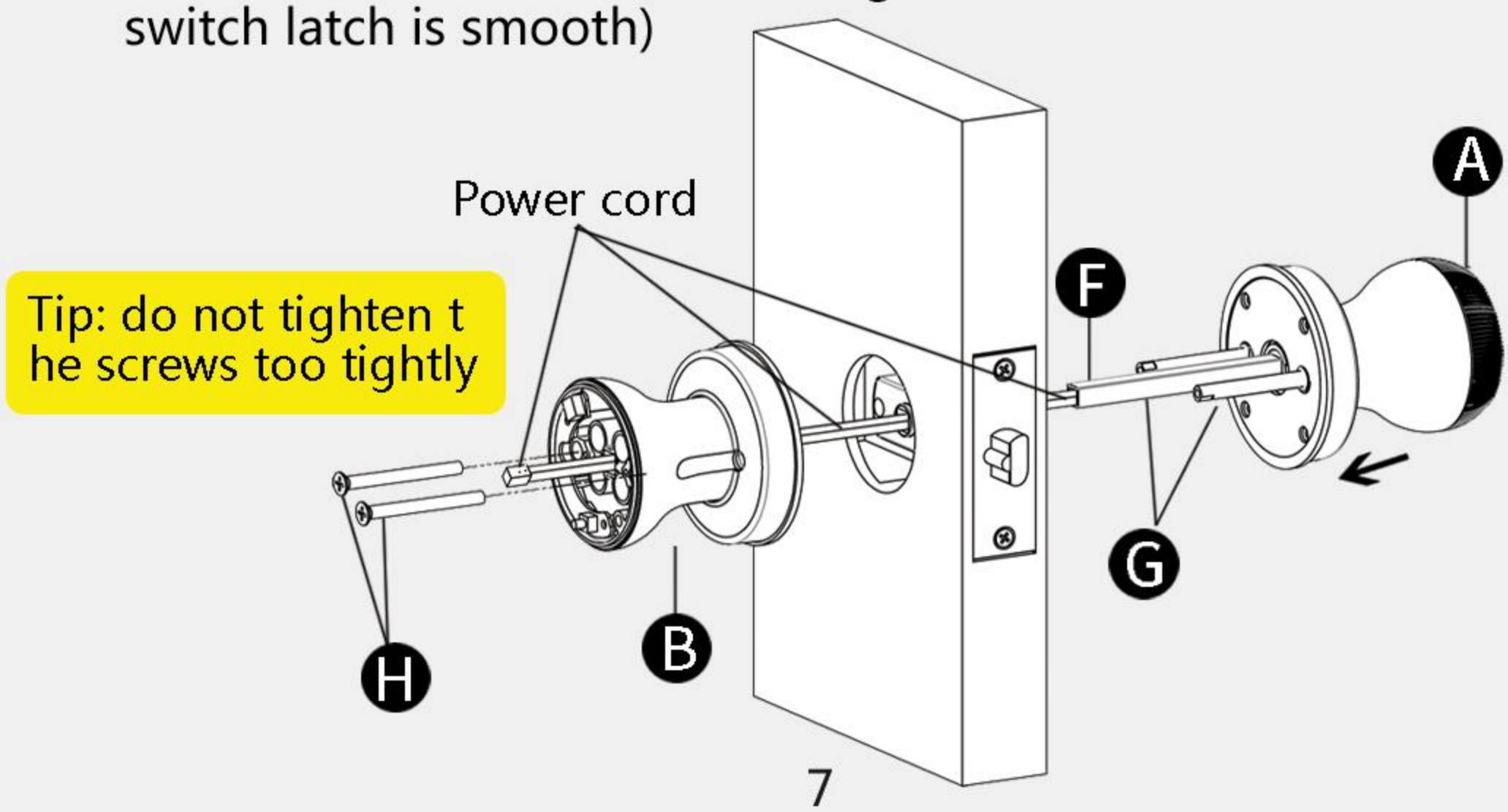

STEP5 . Components before and after installation

C Picture below: plug the power cord into the Jack on the handle circuit board. Follow the"+ ,-" instructions to load four AA batteries.

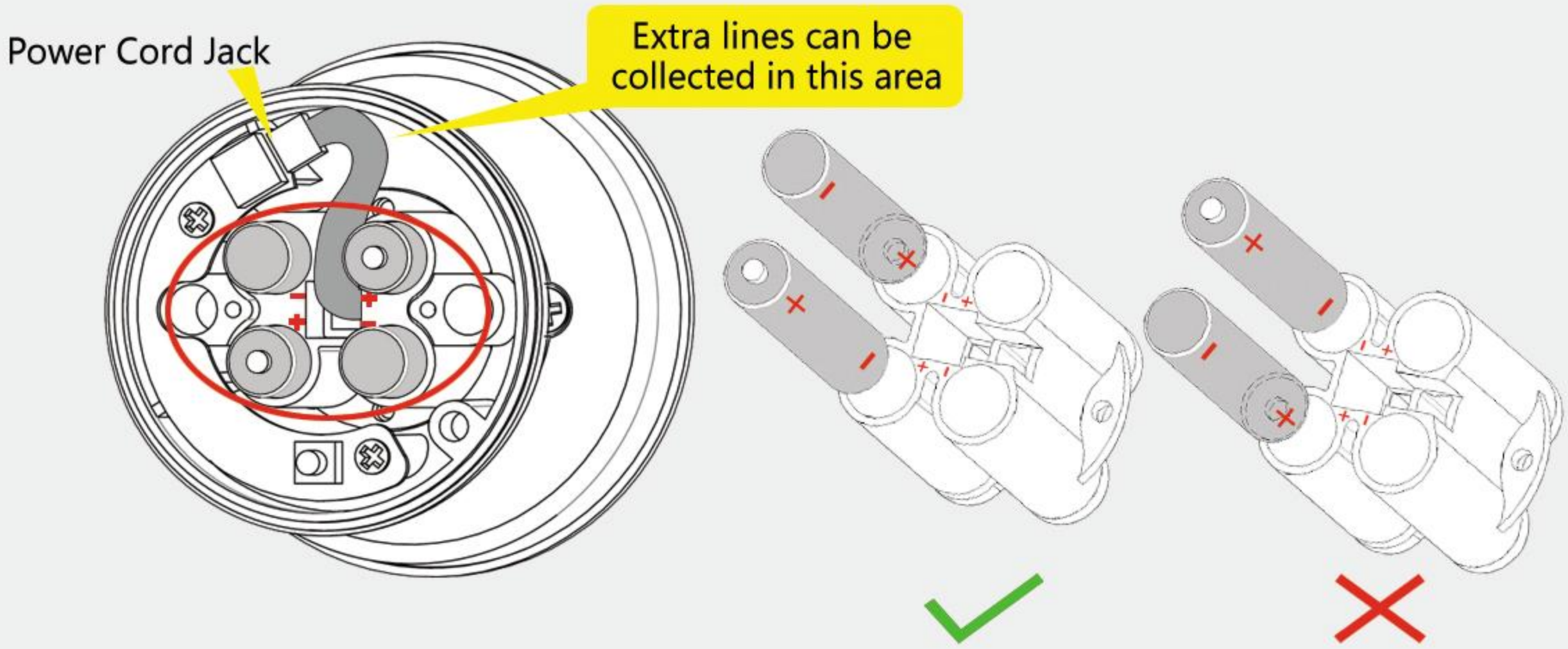

IMPORTANT: Pay attention to the correct direction of battery installation

B Install the battery cover with two screws and test if the product is electrified and the switch is smooth. After all operations are normal, close the handle cover and complete the installation.

Tip : If the product is not powered up please check if the battery is installed in the right direction

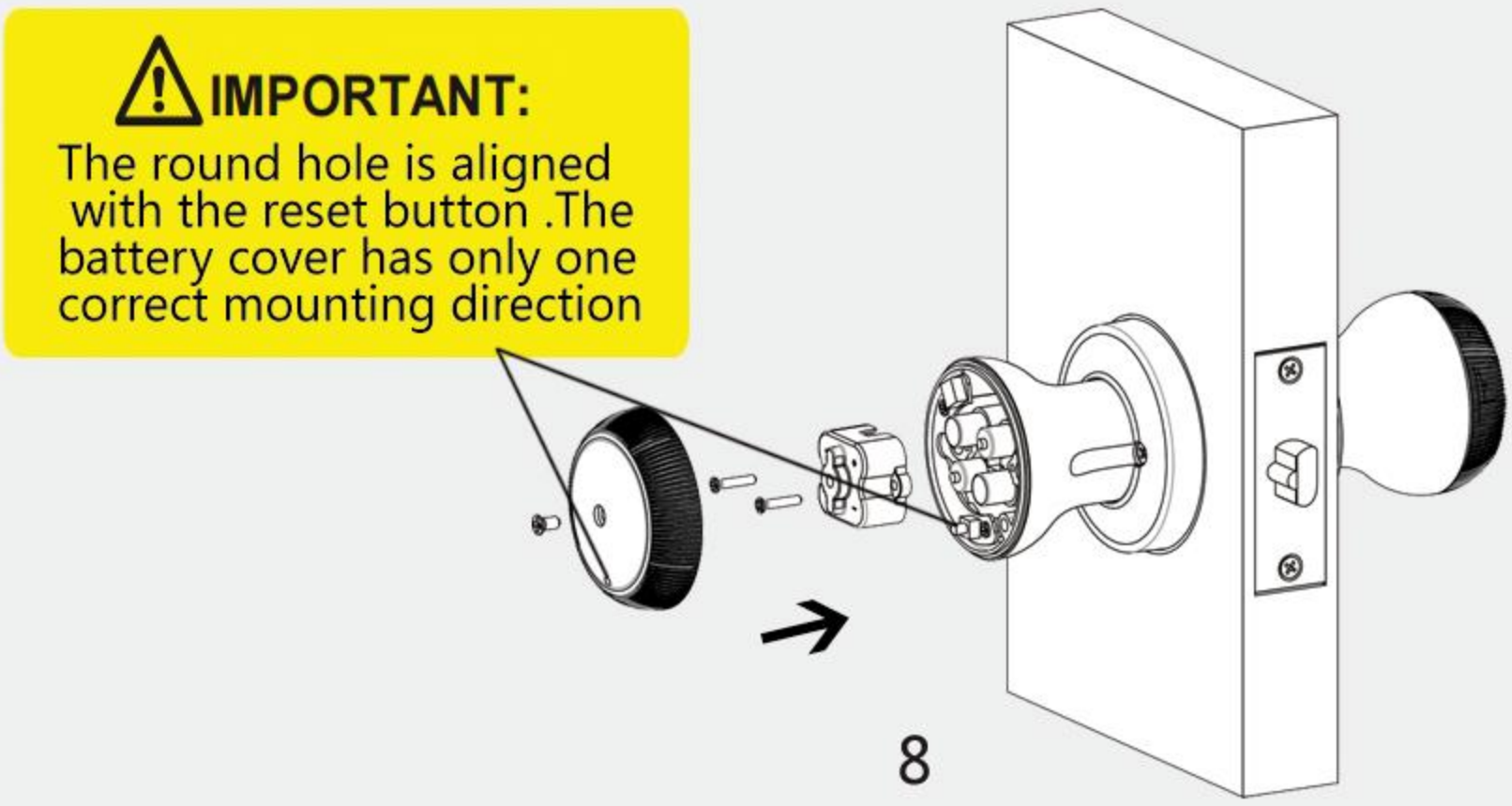

PROGRAMMING INSTRUCTIONS

Function demonstration

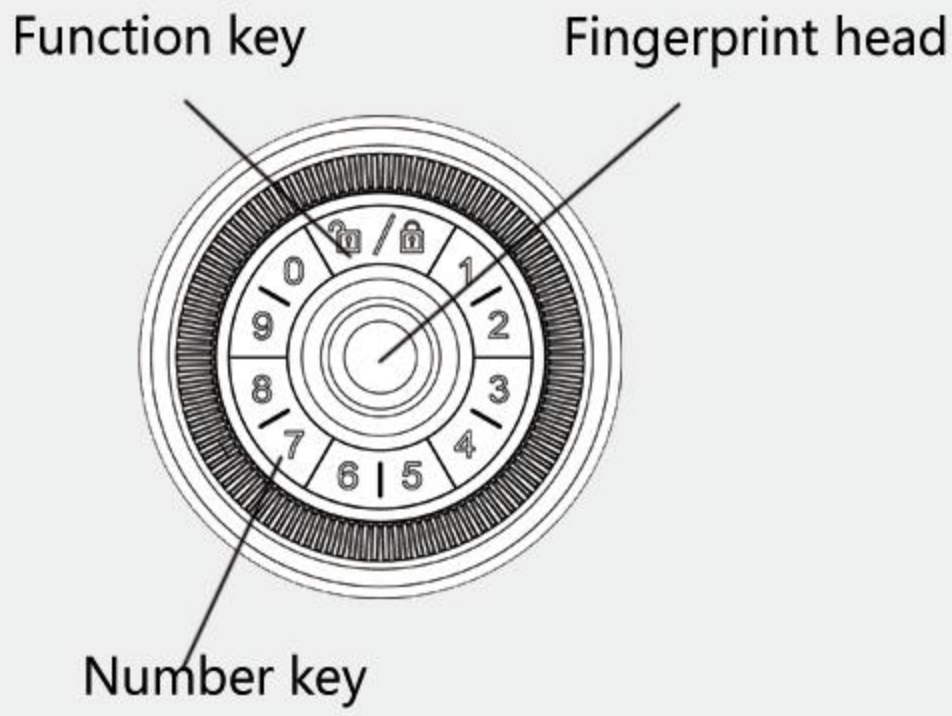

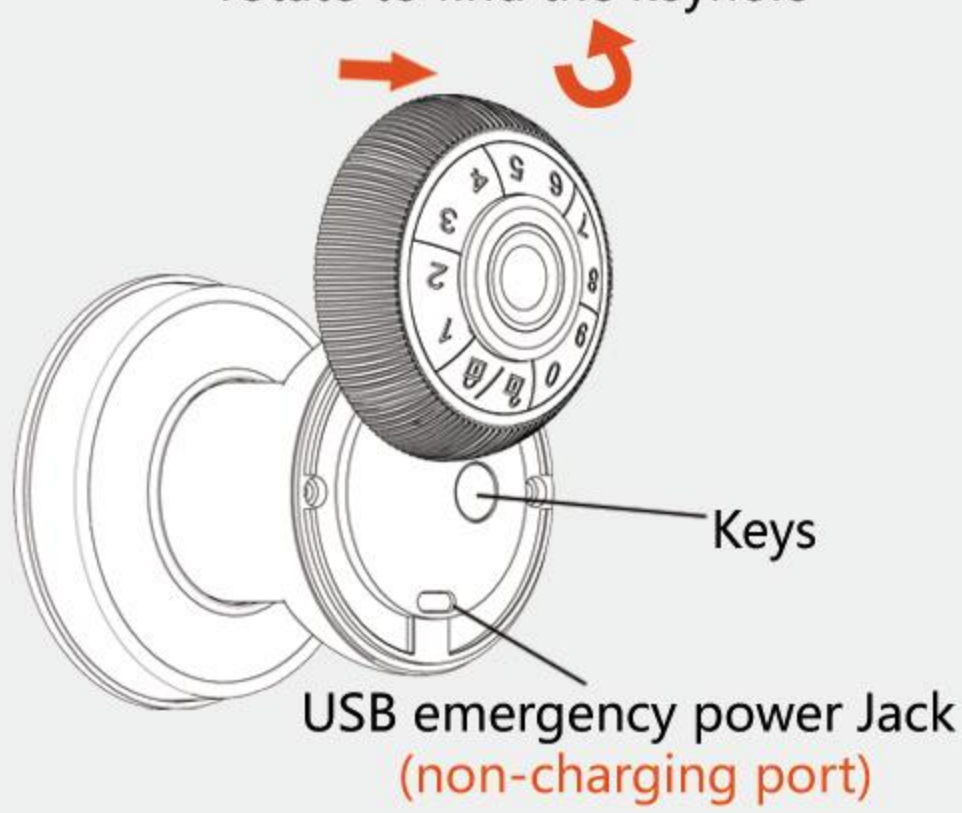

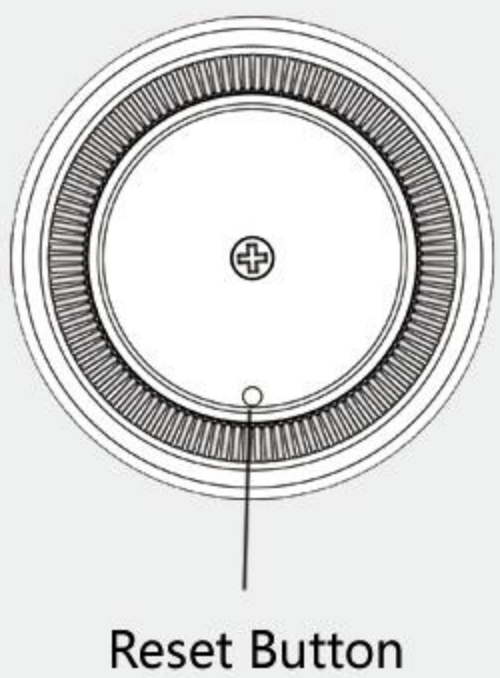

Product parameters

Fingerprint head type ：Semiconductor fingerprint head
Number of code bits : 6-10
User capacity :100 fingerprints, 100 passcodes
Fingerprint resolution ：508DPI
False recognition rate ：<0.001%
Refusal to be candid (FRR) ：<1.0%
Unlock Time : <1.5 seconds
Working Temperature : -20-60 °C
Voltage range : 4-6V
Low alert : 4V
Working Current : < 250 Ma
Standby Current : < = 30ua
Power Supply : 4*AA batteries
Emergency Power Supply: USB

How to use

How to open the door

a: Enter a 6-10 bit master code or user code → 🔓 / 🔒 → Turn the outside handle to unlock the door

b: Identify the user's fingerprint → Turn the outside handle to unlock the door

c: Pull out the keyboard, rotate to find the keyhole, insert the key rotation → Turn the outside handle to unlock the door

d: Tuya APP unlocks → Turn the outside handle to unlock the door

e: Turn the inside handle to unlock the door

How to close the door

a:Auto Lock mode

Lock automatically after 5 seconds

a:Manual Lock mode

🔓 / 🔒 or Tuya APP off lock

Tip : Lock mode can be set on Tuya APP or door lock

Definitions

⚠ **IMPORTANT:**
Factory mode, any 6-digit password and fingerprints can be unlocked, please set the administrator as soon as possible

- ## Unlock mode
  Fingerprints, passwords, keys, Tuya APP Bluetooth
- ## Master Code
  Master code can be programmed and unlocked, factory state has not set the master code, please set and take good care of the master code before official use. Master code for the first set of 6-8-bit password, can be set on the phone or the door lock. The first phone to bind a door lock was also a door lock administrator.
- ## User Code and fingerprint user
  It can only be used to pick locks
- ## Lock mode
  Can be set to automatic lock or manual lock mode, the factory state for automatic lock mode, unlock about 5 seconds after the door lock will be automatically closed. You can change the lock mode on the Tuya APP or on the door lock.
- ## Silent Mode
  The beeping of a button can be muted. But you'll still hear low-battery alarms.
- ## One Time User Code
  This code can only be used once and is automatically deleted after use. You can set it up on Tuya APP
- ## Low Battery Alarm
  After unlocking the lock in any way, you hear five "Drops" and a red light flashing, which is an alarm of low battery power. Please replace 4 brand new AAA alkaline batteries, do not mix old and new batteries.
- ## Unlock with Fake code
  User can prevent pin code exposure from strangers by entering random digits before or after pin code.

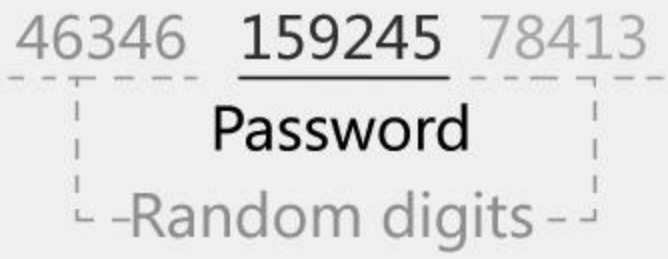

How to program

Overview of programming

- Programming methods
  a . Programming on Tuya App
  b . Program the door lock

- An overview of Tuya APP programming
  a . The door lock is in factory condition. Download and open the Tuya App. Turn on your Bluetooth. Click add product to search directly to the door lock (This method is recommended for easier programming)

  b . Has set the administrator code on the first lock, at this point the phone can not directly search for the lock. You will need to press " 5 " + " " + " Set admin code " on the keypad of the door lock. The door lock will send out a paired signal. You can find the door lock by opening the Bluetooth and Tuya APP on your phone.

- Overview of Door Lock programming
  a . Factory state administrator code for any 6-digit

  b . If the lock and phone are already locked, set an administrator code on the APP. The first code set in the APP is the administrator code. Enter this code to access the lock settings.

Programming step 1

App downloads and accounts

Download the APP and register the user

Search the APP market or scan the QR code to download the "Tuya" APP

Scan the code to Download Tuya App

OR

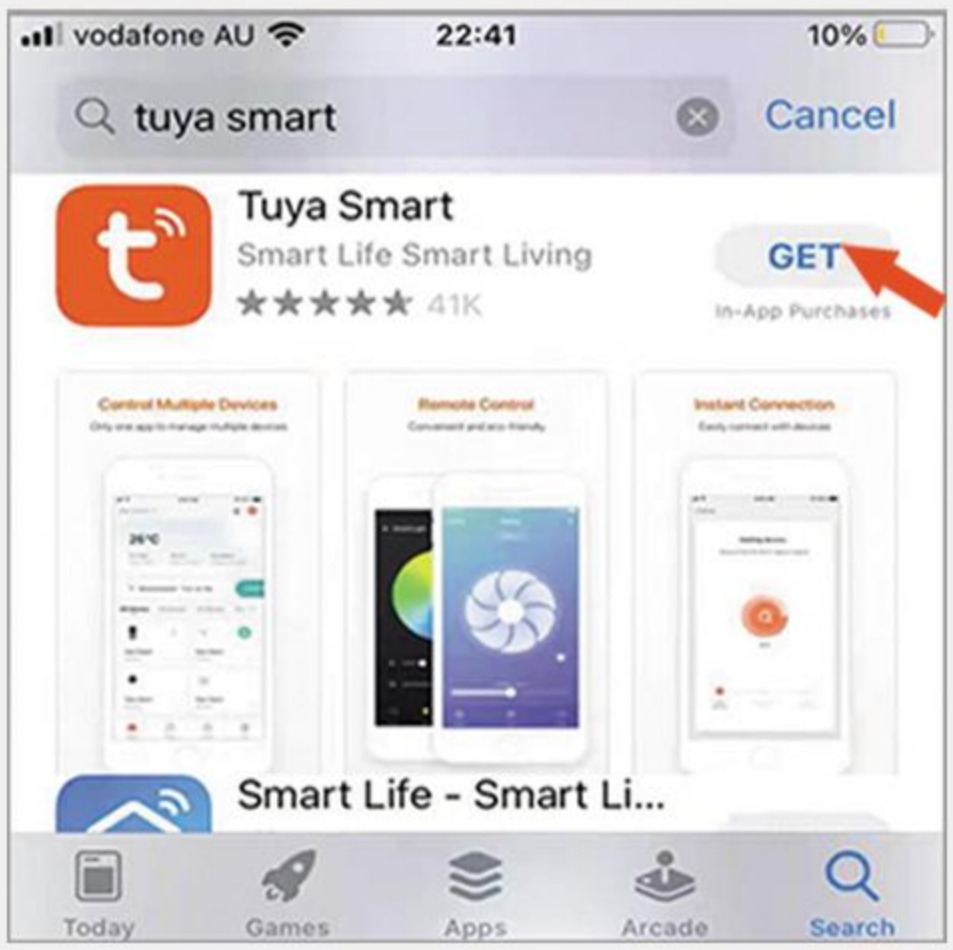

Turn on the Bluetooth function of your phone, open the Tuya app, and register a user

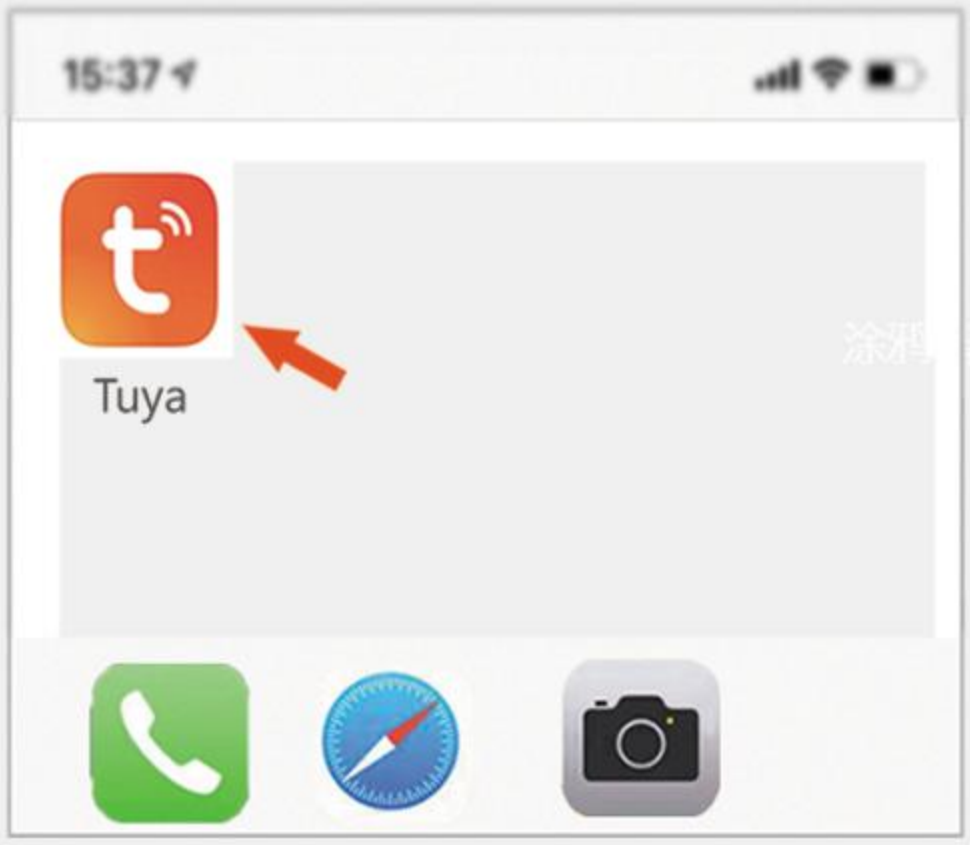

Programming step 2

App usage method

Add a door lock (Turn on Bluetooth function on your phone)

a: Before adding any administrators, after opening the app, the phone will automatically pop up the device to be added as shown in Figure 1 or click "Add Device" as shown in Figure 2. Waiting for a few seconds, it will appear as shown in Figure 3. At the same time, the door lock will emit a "beep" sound. Click "Next" to confirm, and then click "Finish" according to the interface shown in Figure 4. The door lock is successfully added, now the phone is the door lock administrator.

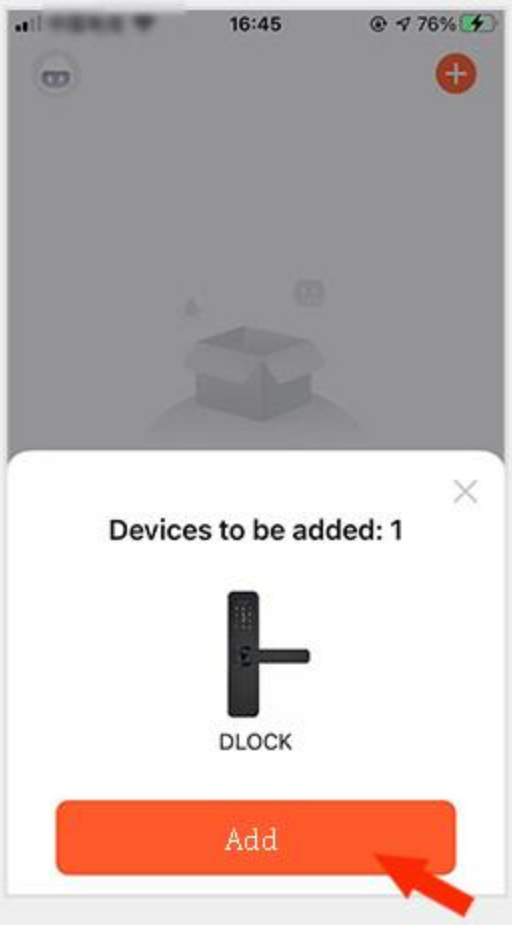

1

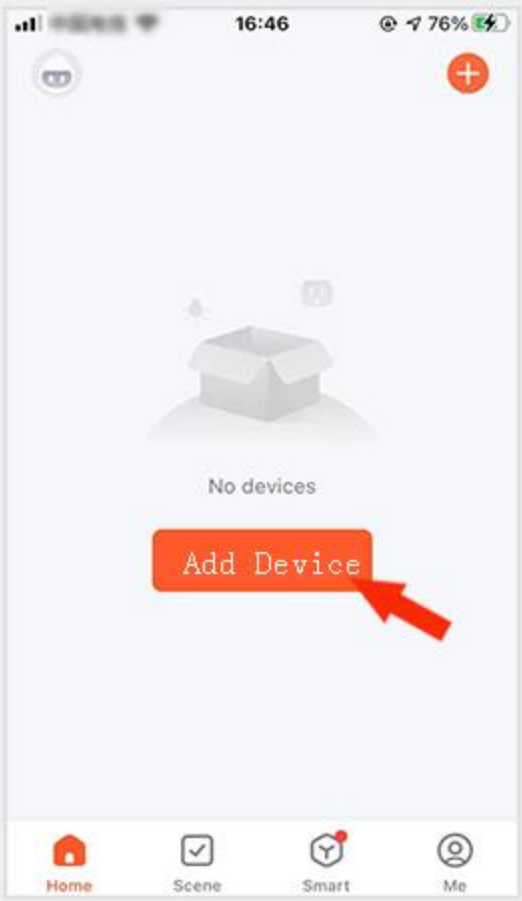

2

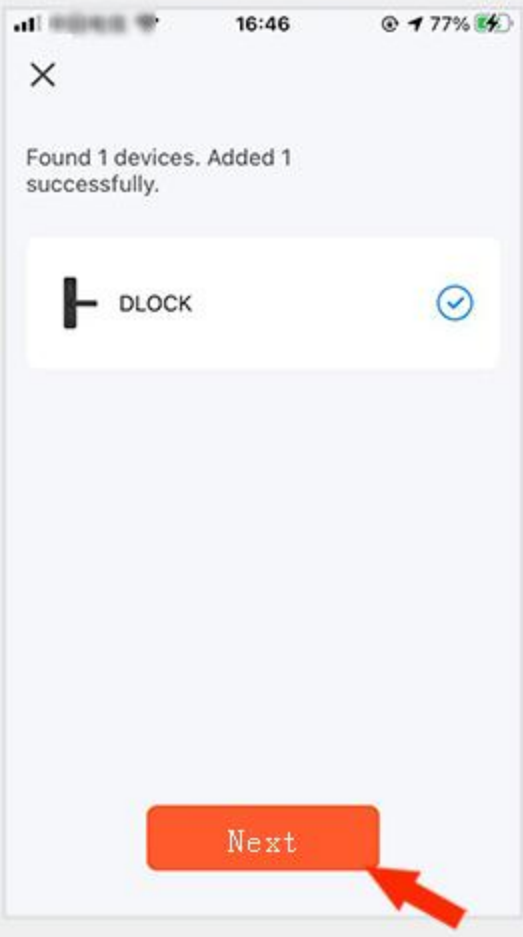

3

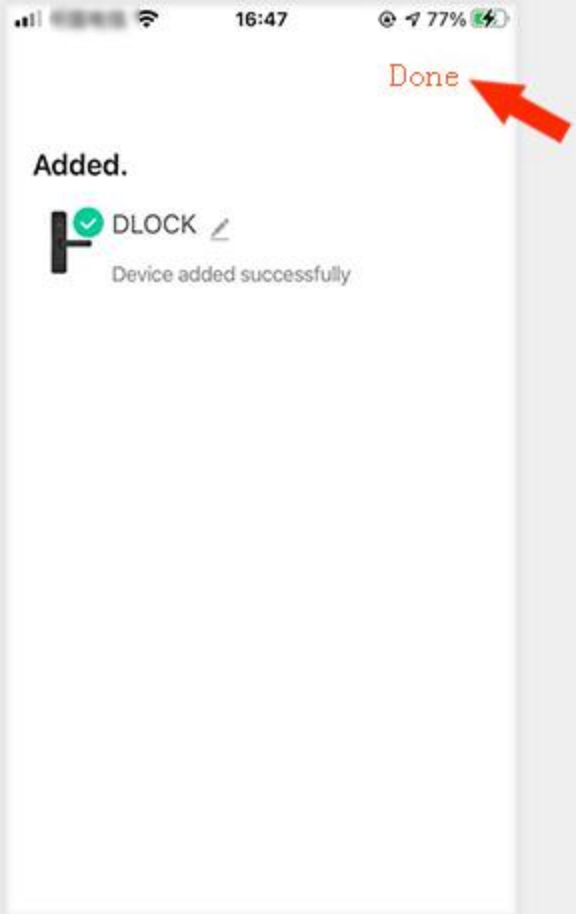

4

b: If the administrator password has been set on the door lock, and the phone cannot automatically detect the door lock, You need to manually activate Bluetooth on the door locks. (View Quick setup: Activate Bluetooth) so the phone can discover the door lock. Then, follow step [a] to operate.

Door Lock member management

As shown in figure 5 below, click on the added locks to enter the lock Operation Interface, as shown in Figure 6 below, click on “Membership management” to enter the interface of Figure 7, click on the top right corner “+” can be prompted to add the management of the door lock operators.Click “Add member” to add and share other members, set the permissions of members.

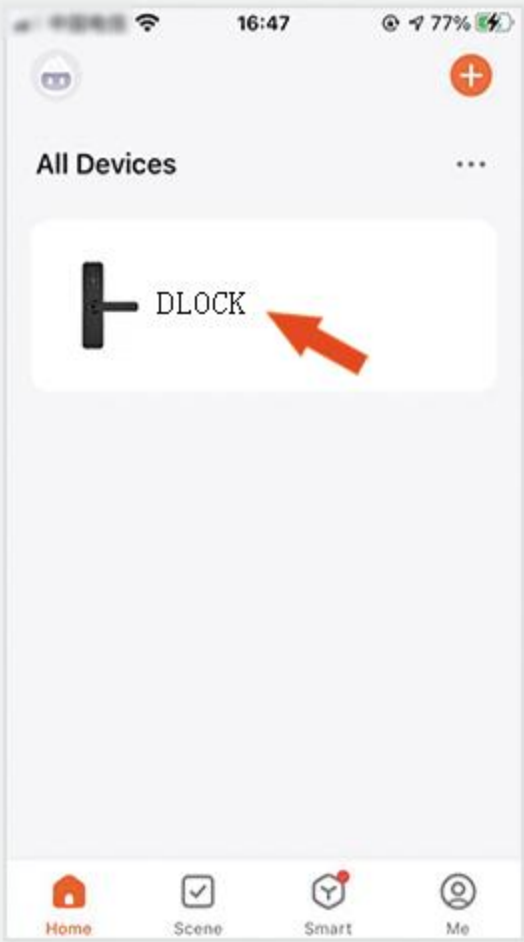

5

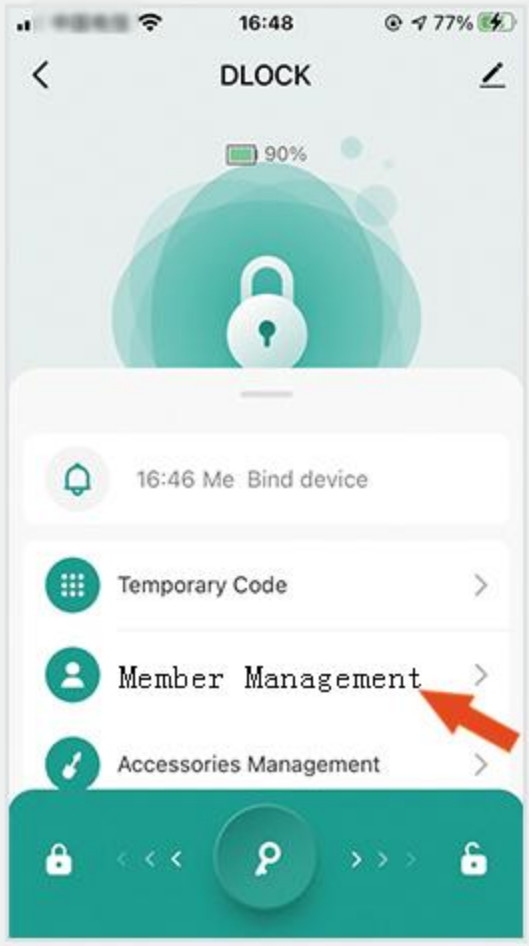

6

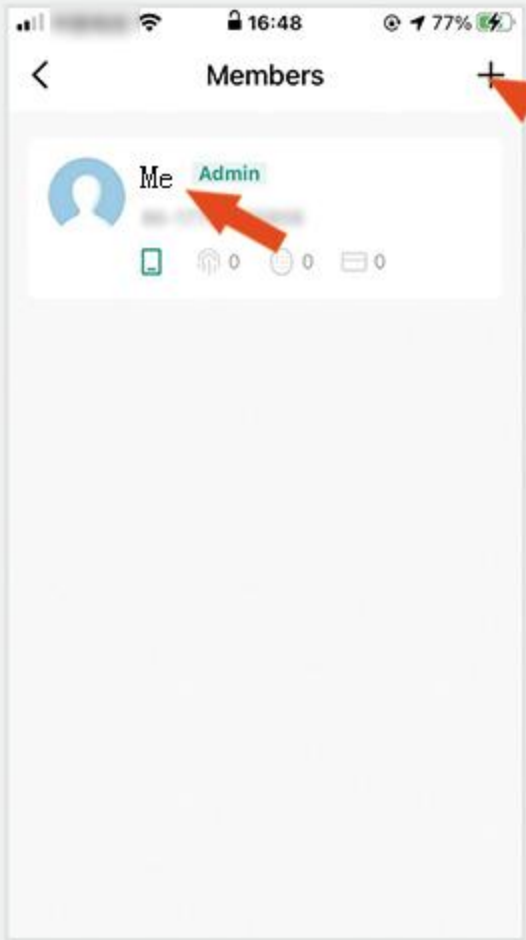

7

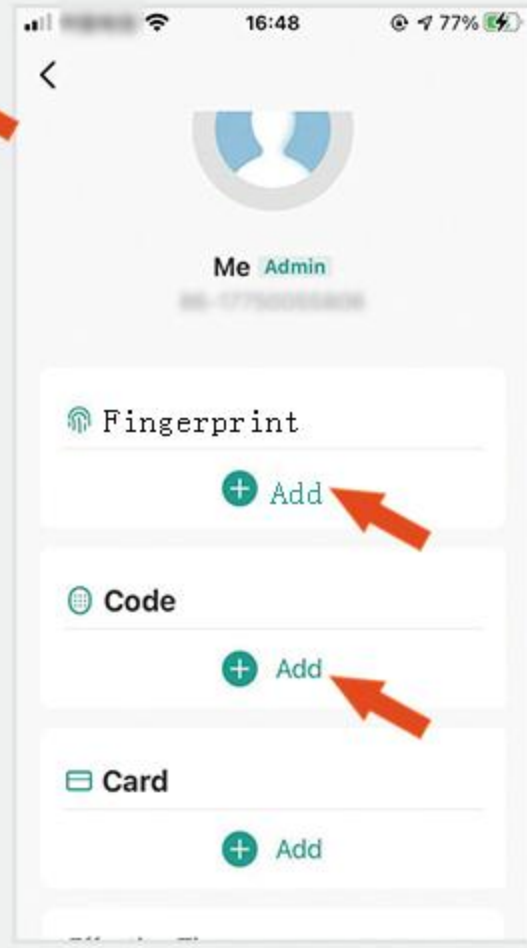

8

Add fingerprints, passwords

As shown in figure 7, click “Me” , as shown in figure 8, click “Add” , according to the prompt for fingerprint, password, input settings. Password set 6-10 digits.

Mobile phone unlock

As shown in Figure 9 below, hold down the key button below and drag itto the right to unlock.

9

Set a temporary password

As shown in Figure 10 below, click "Temporary Password" and follow the prompts to setand share a time password.

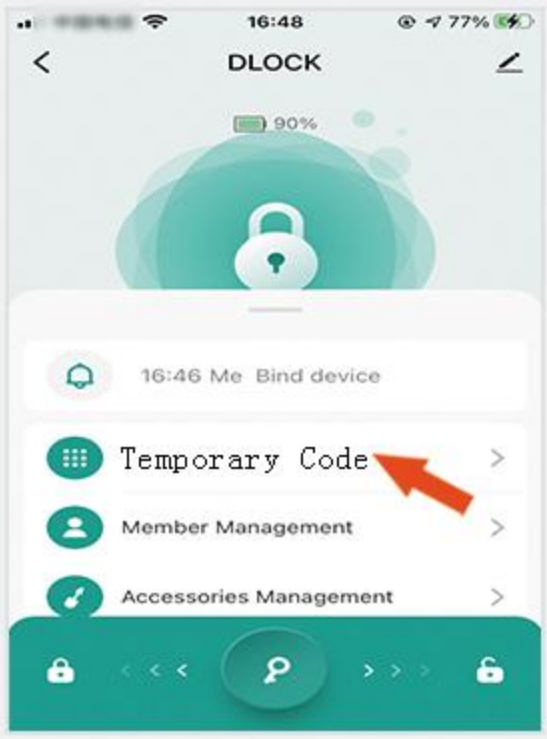

10

Power and record

After waking up the door lock, you can display the battery level of the door lock and viewthe unlockingrecord on the mobile phone, as shown in Figure 11 below.

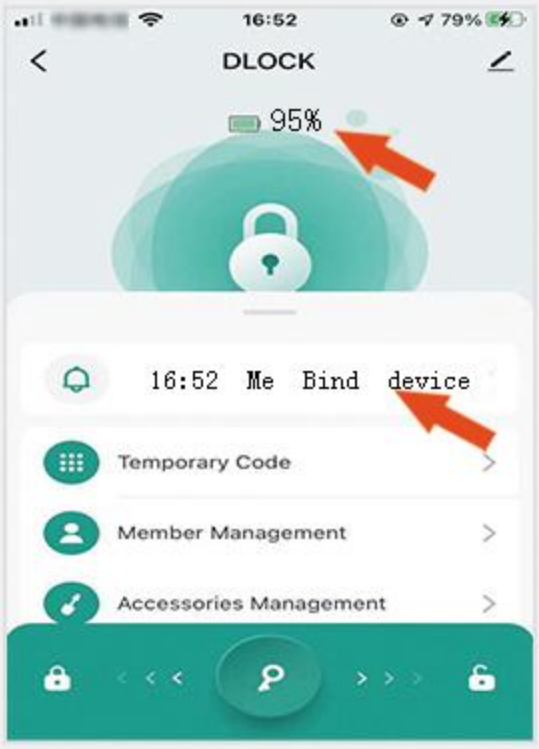

11

Other function settings

As shown in Figure 12 below, click "Settings" to enter the function menu to set more functions such as "Auto Lock, mute" and so on.

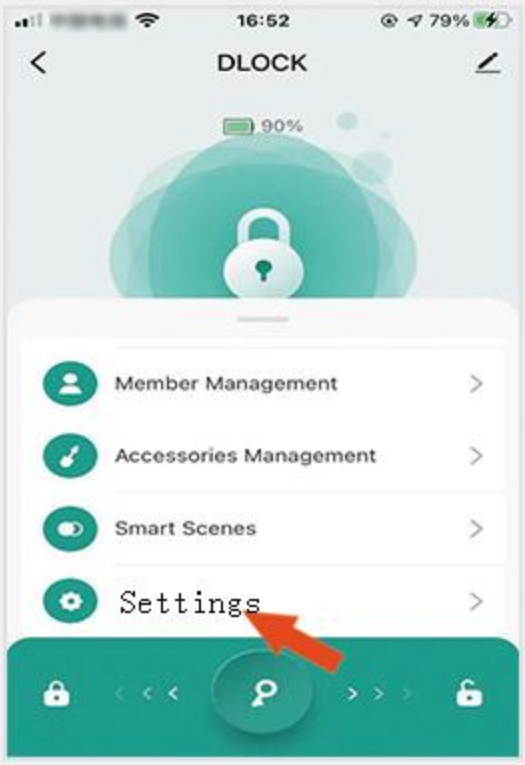

12

Programming step 3

How to delete admin and user

a: Click the button in the upper right corner as shown in Figure 13 below, then click "Remove Device" as shown in Figure 14 below, and then click "Unbind and Clear Data" to restore the factory successfully.

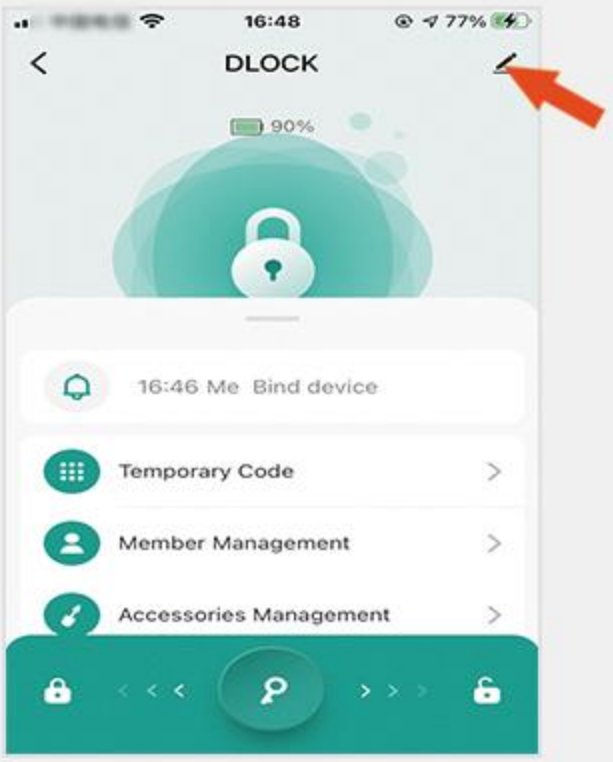

13

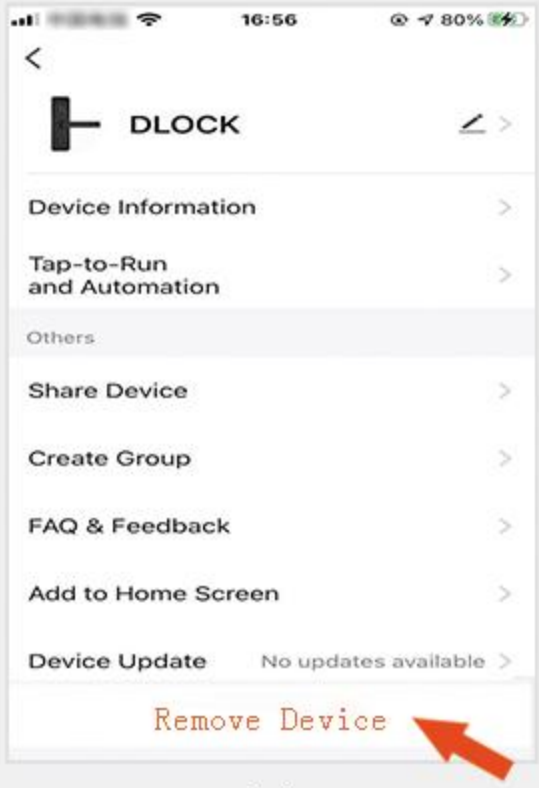

14

b: Use the reset tool to press the reset button on the hole in the hand after not to put, the red light of the door lock flashing, issued 9 beeps, the sound stops to let go, the light turns green and then goes out. Factory reset successful.

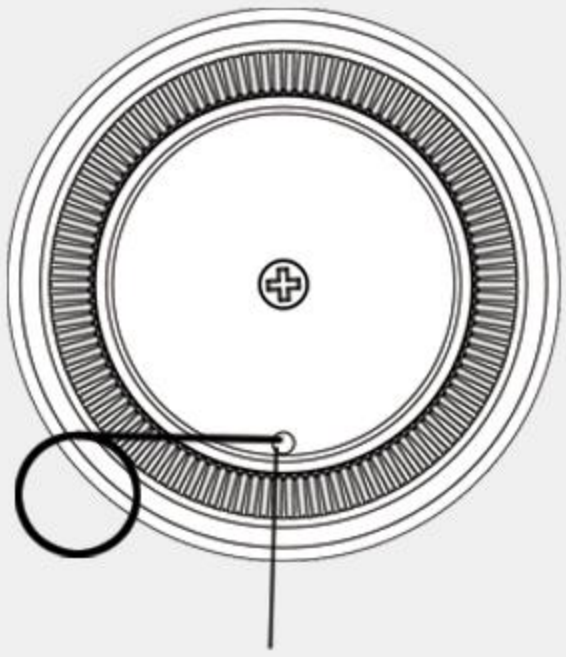

Reset Button

Programming step 4

Fast programming
(programming directly on door locks)

⚠ **IMPORTANT:**
The first time to add an administrator, verify administrator input any 6-digits,the second time to add users need to verify the administrator code has been set.

1	Add administrator	Press 1+ 🔒 +Any 6-digits+ 🔒 +new master code+ 🔒 +new master code again+ 🔒 (The administrator password length should be 4-10 digits)
2	Add user code	Press 1+ 🔒 +Master code+ 🔒 +new user code+ 🔒 +new user code again+ 🔒 (4-10 digit password can be set)
3	Add user fingerprint	Press 1+ 🔒 +Master code+ 🔒 +Scan the fingerprint 4 times
4	Lock mode	Press 2+ 🔒 +Master code+ 🔒 (Lock automatically or manually)
5	Voice switch	Press 3+ 🔒 +Master code+ 🔒
6	Activate Bluetooth	Press 5+ 🔒 +Master code+ 🔒
7	Restore factory settings	Press 8+ 🔒 +Master code+ 🔒

Tip: The green light will come on when you program correctly.
A bad program will have a red light and a beep, BEEP, beep

Disclaimer: We reserve the right to change the design due to product improvement without prior notice.

Troubleshooting

- The product is not electrified after installation

  Please carefully check the installation step 5, check whether the power cord is plugged in, check whether the battery installation direction is correct.Check that the battery cover is installed in the correct direction
  All the above checks are OK. Please connect the USB backup power to the front handle. If it can be used normally, it is possible to rip off the power cord during installation

- Turn the front and back handles, do not retract the latch

  Check the installation step 3, check the latch adjustment length is in place

- Hot batteries consume electricity quickly

  1. Check that the battery cover is installed in the wrong direction.
  2. Check if the battery line is squeezed.

- The user entered a fingerprint or password is not available

  Incorrect programming caused the information storage to fail. Please watch the programming tutorial carefully to re-program。

- The handle can not be reset after rotation

  Check installation step 4b. Over-tightening of the locking screw may result in the handle not being able to reset

- Fingerprint recognition is not sensitive

  Because everyone's fingerprint clearance is different. The area where fingerprints are taken and compared should be consistent. To facilitate fingerprint identification, a finger can be stored as a number of users.As shown in the following figure

- How can I open the door when the power is out

  Low power conditions will have low alarm. The door can be opened about 200 times after a low alarm. If you forget to replace your battery and you can't open the door, you can plug a power strip into the USB port to open door.

- Forget the password

  Key can open the door in any case, forget the password can use the key to open the door, and combined with forced recovery factory settings. After reprogramming.

- Please contact us if you have any further questions

Information & Safety Warnings

- Protect your User Codes and Master Code.
- Restrict access to your lock’s interior assembly and routinely check your settings to ensure they have not been altered without your knowledge.
- Do not use an electric screwdriver during installation
- This manufacturer advises that no lock can provide complete security by itself.
- This lock may be defeated by forcible or technical means, or evaded by entry elsewhere on the property.
- No lock can substitute for caution, awareness of your environment, and common sense.
- Care should be taken to ensure a long-lasting finish. When cleaning is required use a soft, damp cloth. Using lacquer thinner, caustic soaps, abrasive cleaners or polishes could damage the coating and result in tarnishing.
- Avoid exposure to direct sunlight. Long-term exposure to direct sunlight may damage the lock.

This device complies with part 15 of the FCC Rules. Operation is subject to the following two conditions: (1) This device may not cause harmful interference, and (2) this device must accept any interference received, including interference that may cause undesired operation.

Any Changes or modifications not expressly approved by the party responsible for compliance could void the user's authority to operate the equipment.

Note: This equipment has been tested and found to comply with the limits for a Class B digital device, pursuant to part 15 of the FCC Rules. These limits are designed to provide reasonable protection against harmful interference in a residential installation. This equipment generates uses and can radiate radio frequency energy and, if not installed and used in accordance with the instructions, may cause harmful interference to radio communications. However, there is no guarantee that interference will not occur in a particular installation. If this equipment does cause harmful interference to radio or television reception, which can be determined by turning the equipment off and on, the user is encouraged to try to correct the interference by one or more of the following measures:

-Reorient or relocate the receiving antenna.

-Increase the separation between the equipment and receiver.

-Connect the equipment into an outlet on a circuit different from that to which the receiver is connected.

-Consult the dealer or an experienced radio/TV technician for help.

FCC Radiation Exposure statement

The device has been evaluatec to meel general RF exposure requirement. The device can be used in porlable exposure condition without restriction.