Product Manual

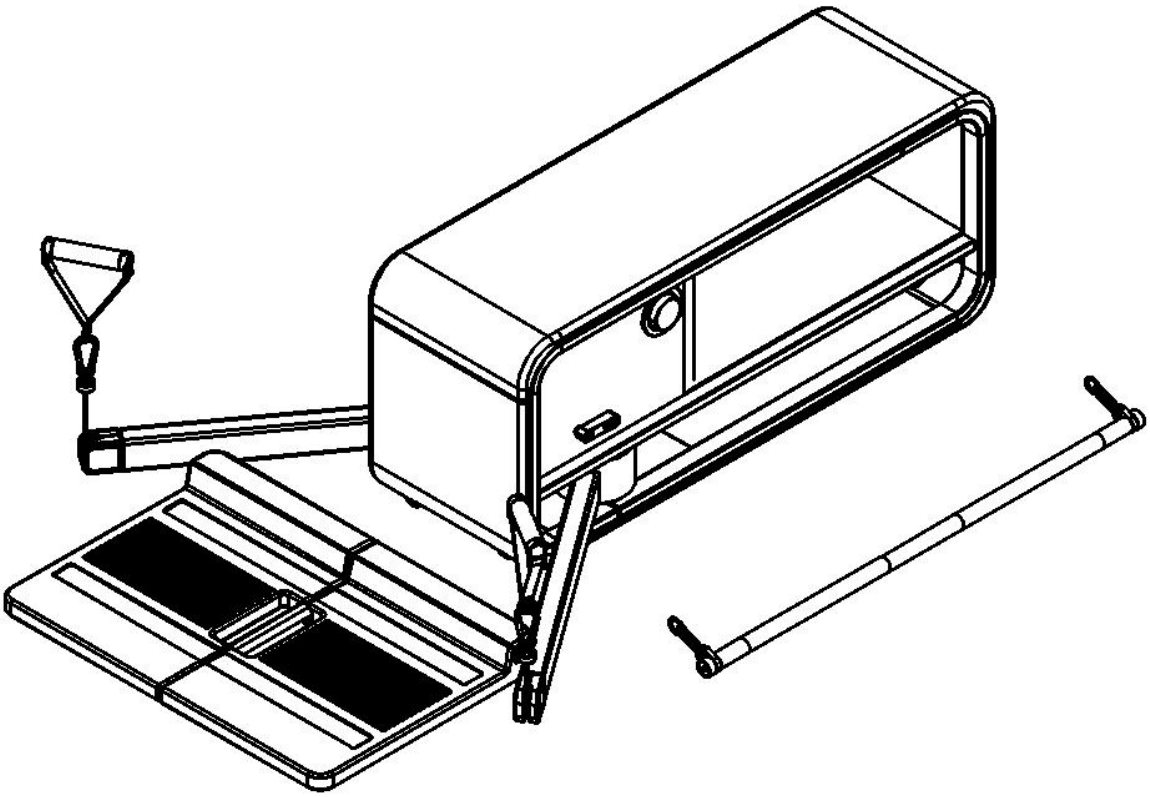

Product Name: smart finesse bench

Product Model: TB02

Contents

1. Safety Instructions

2. Exploded Diagram

3. Parts List

4. Package Contents

5. Assembly Instructions

6. Operation Instructions

7. Muscle Training Diagram

8. Control Instructions

9. Warranty Terms

01 Safety Instructions

Important: This safety manual contains important safety usage information. Please read it carefully before use.

Thank you very much for choosing our company's product. It can help you maintain a healthy body. To avoid personal injury, please read the following instructions carefully before using this product. We're highly recommend keeping this product manual for future reference!

- **This machine is primarily intended for home fitness equipment.**
- **To avoid the risk of electric shock, unplug the power cord before cleaning or servicing this equipment. The equipment 's power cord must be connected to an outlet with a proper grounding connection.**
- **Do not use this equipment outdoors or in areas with high humidity. Maintain a safety clearance of at least 2 meters by 2 meters in front of the fitness bench.**
- **When using the equipment, users should wear appropriate sportswear and sport shoes. Before using the equipment, it's advisable to consult a trainer or a professional, as incorrect or excessive exercise could be harmful to your health.**
- **Before use the equipment, users can adjust the machine's robotic arms according to the targeted muscle groups you're intend to train. Adjust the arms to the most suitable positions before starting the workout.**
- **When adjusting the robotic arms, make sure the pins are securely in place. After adjusting the position, gently shake the adjustment area to ensure it's properly secured.**
- **When using the equipment, make sure to confirm that the adjustment parts are properly secured in place before operation.**
- **After completing your training, you can adjust the equipment's parts to the most space-efficient position for ease of walking or any movement in your home.**
- **After finishing your workout, please promptly turn off the equipment's power switch and unplug the power cord to prevent unauthorized use by others. (The power cord at the bottom of the equipment is detachable for easy removal, please store the power cord properly.)**
- **If the fitness bench produces unusual noises or operates abnormally, you can contact our after-sales department or seek assistance from a professional.**
- **Warning: If you feel dizzy during the training process, stop exercising immediately.**
- **For operation of the control panel, please refer to the control panel instruction .**
- **Product Specifications (L*W*H): 109×35.6×46.5cm**
- **Product Weight: 65KG**

1. NOTICE

- The equipment owner is responsible for ensuring that all users fully understand all warnings and precautions associated with this product. It is essential to use this equipment strictly according to the instructions.
- Keep children and pets away from this equipment, and avoid leaving children alone in a room where this product is placed.
- Before using the equipment, please ensure that this equipment has been properly assembled and all screws are securely tightened in place.
- This equipment should be placed on a level surface, with a distance of more than 1 meter from the walls on all sides. It is highly recommended to place this equipment on a dedicated floor mat to prevent damage to the floor or carpet.
- This equipment should be placed indoors to prevent moisture and dust. Maintain proper ventilation in the usage area and avoid using this equipment in confined spaces.
- Do not place sharp objects around this equipment.
- When using this equipment, it is necessary to wear appropriate sportswear. Do not wear long robes or other clothing that could potentially get caught in the equipment. You must wear running shoes or sport shoes.
- Avoid prolonged exercises to prevent muscle injury.
- If you feel discomfort or experience any abnormal conditions while using the equipment, stop exercising immediately and consult your doctor.

2. WARING

Individuals who may be at risk of accidents or have underlying health issues should consult your doctor first before using this equipment .

(1) Individuals who currently experiencing back pain, or those who have had past injuries to the legs, back, neck, as well as individuals with numbness in the legs, back, neck, or hands (such as those with herniated discs, slipped vertebrae, cervical disc protrusions, or other chronic conditions).

(2) Individuals with arthritis deformans, rheumatism or gout.

(3) Individuals with conditions like osteoporosis.

(4) Individuals with circulatory system disorders such as heart disease, vascular disorders and hypertension.

(5) Individuals with respiratory organ disorders.

(6) Individuals using artificial pacemakers or implanted medical electronic devices.

(7) Individuals with malignant tumors.

(8) Individuals with thrombosis or severe vascular obstruction, acute inflammation, blood circulation disorders.

(9) Individuals with sensory disturbances caused by severe peripheral circulation disorders, such as those resulting from diabetes.

(10) Individuals with skin injuries.

(11) Individuals with a high fever (38°C or above) due to illness or other reasons.

(12) Individuals with abnormal spine conditions or spinal curvature

(13) Pregnant or those who might be pregnant, or currently menstruating.

(14) Individuals who feel physically unwell and require rest.

(15) Individuals with noticeably poor physical conditions.

(16) Individuals who using this product for rehabilitation purposes.

(17) Individuals who feel any unusual discomfort not covered by the above conditions.

Before using this equipment, it's recommended that consult your doctor or getting a medical check-up. This is really important if you are over 35 years old and have never exercised before, or are pregnant, or have any preexisting medical conditions. Reading and adhering to these preventive measures is very

crucial, failure to follow those above precautions and safety warnings may result in serious bodily injury.、

FCC warning

This equipment has been tested and found to comply with the limits for a Class B digital device, pursuant to Part 15 of the FCC
Rules. These limits are designed to provide reasonable protection against harmful interference in a residential installation.
This equipment generates uses and can radiate radio frequency energy and, if not installed and used in accordance with the
instructions, may cause harmful interference to radio communications. However, there is no guarantee that interference will
not occur in a particular installation. If this equipment does cause harmful interference to radio or television reception, which
can be determined by turning the equipment off and on, the user is encouraged to try to correct the interference by one or
more of the following measures:
-- Reorient or relocate the receiving antenna.
-- Increase the separation between the equipment and receiver.
-- Connect the equipment into an outlet on a circuit different from that to which the receiver is connected.
-- Consult the dealer or an experienced radio/TV technician for help.
This device complies with part 15 of the FCC Rules. Operation is subject to the following two conditions:
(1) This device may not cause harmful interference, and (2) this device must accept any interference received, including
interference that may cause undesired operation.
Changes or modifications not expressly approved by the party responsible for compliance could void the user's authority to
operate the equipment
*RF warning for Mobile device:
The device has been evaluated to meet general RF exposure requirement. The device can be used in portable exposure condition without restriction.

FCC ID:2BGJ6-OMA-TB02

02 Exploded Diagram

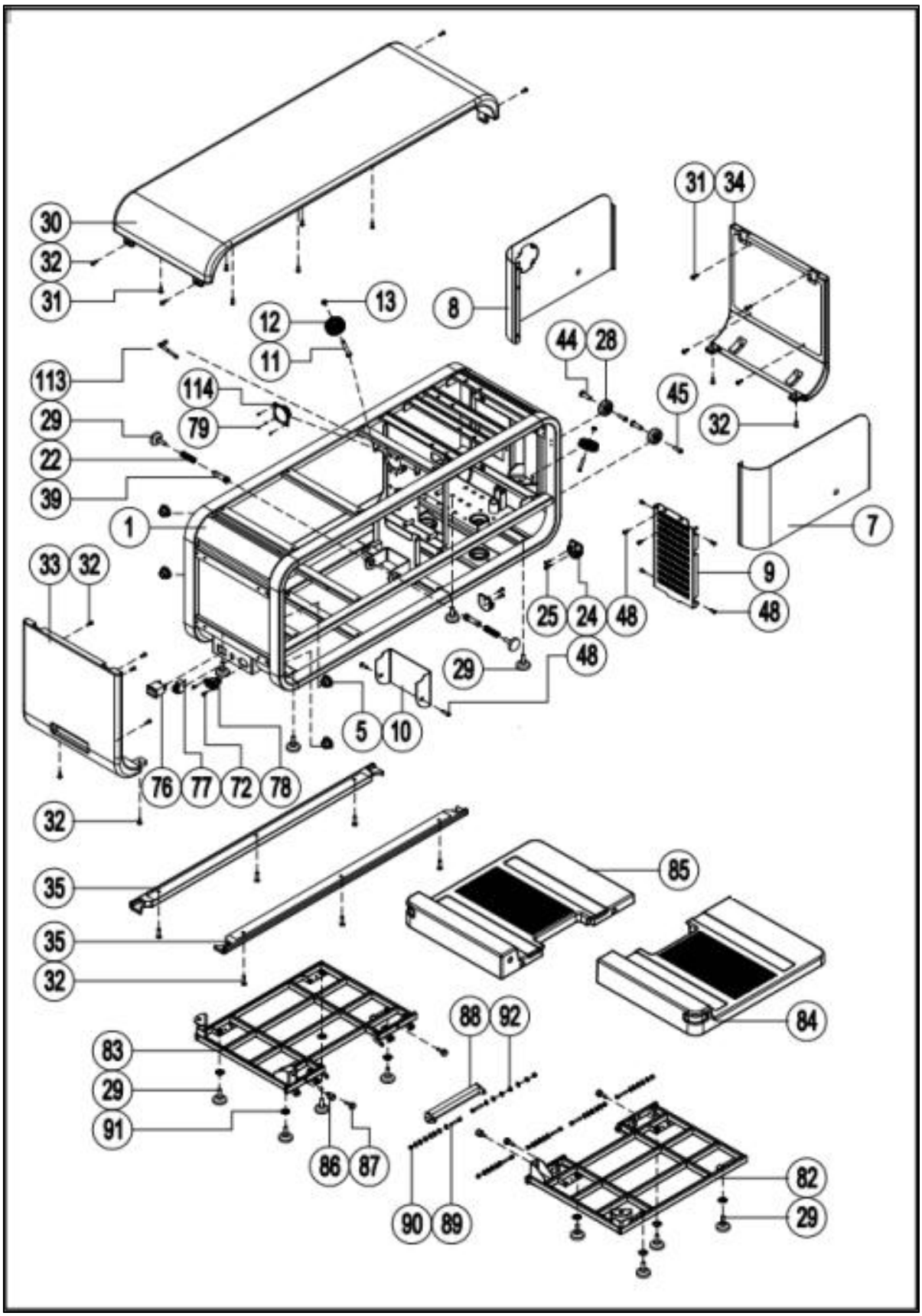

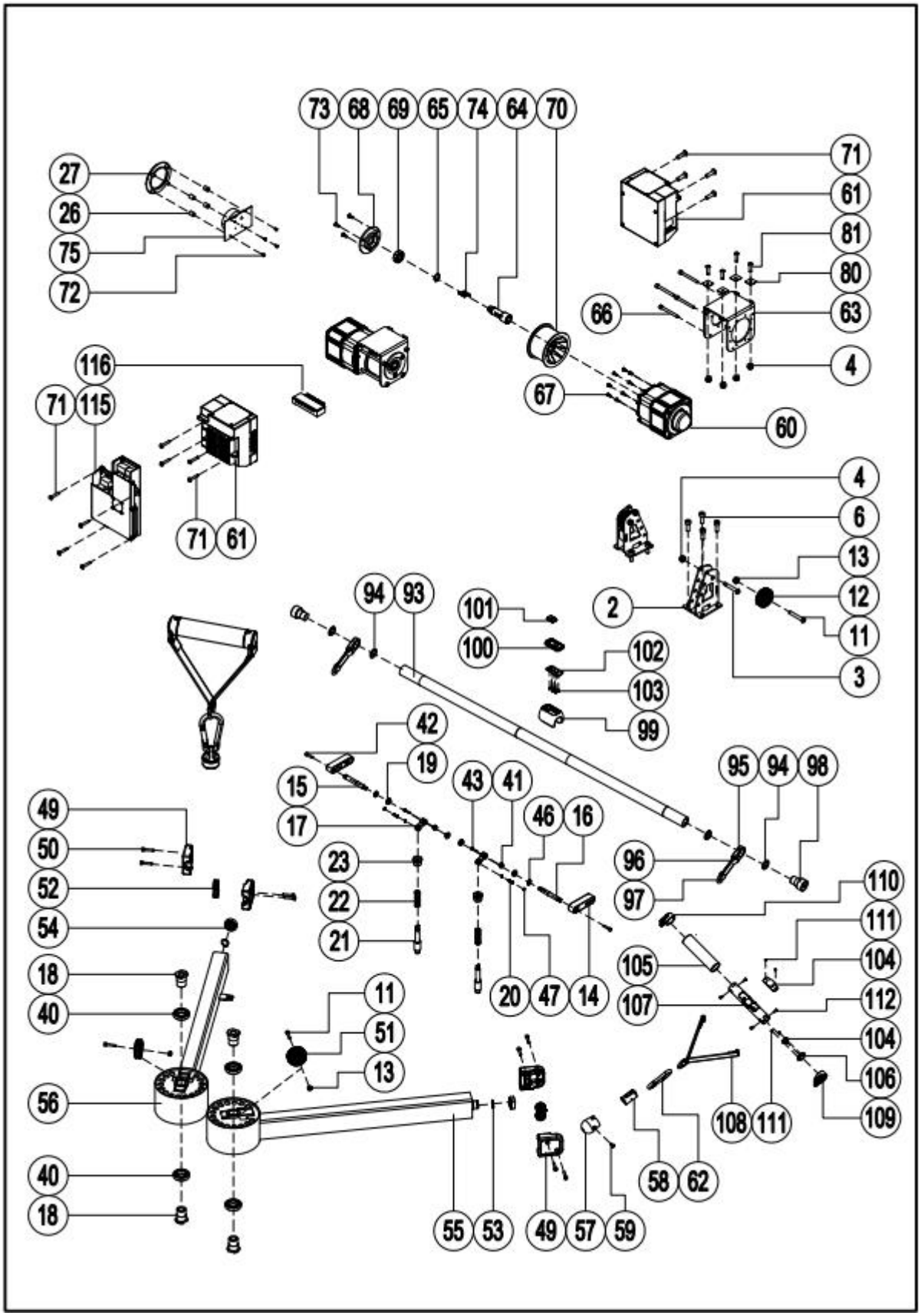
73
68
69
65
74
64
70
27
26
75
72
71
61
81
80
66
63
4
116
71
115
67
60
71
61
4
6
13
12
11
3
2
94
93
101
100
102
103
99
42
19
15
17
43
41
46
16
95
94
98
49
50
52
54
23
22
21
96
97
110
111
104
105
107
112
104
106
109
18
40
20
47
14
11
51
13
56
108
111
40
18
58
62
55
53
49
57
59

03 Parts List

No.	Description	Spec	Qty.
1	Main Frame		1
2	Pulley Yoke		2
3	Bolts	M6×30×10	4
4	Hexagon Lock Nuts	M6	12
5	Plug E30-V1-29)	Φ16×9.5	4
6	Bolts	M8×15	8
7	Motor Side Baffle	t0.8×258×488.2	1
8	Motor Side Baffle	t0.8×258×488.2	1
9	Sheet Metal Air Vent	t0.8×281×177.3	1
10	Power Baffle	t1.2×258.3×108	1
11	Bolts	M10×35×20	6
12	Pulley Yoke	Φ50×Φ10×22	6
13	Hexagon Lock Nuts	M10	2
14	Rotating Handle	80×20×20	2
15	Handle Pin Roll (L)	ϕ10×88	1
16	Handle Pin Roll (R)	ϕ10×88	1
17	Pin Roll Fixing Sleeve	37.1×15.1×11	2
18	Shaft Nut	ϕ32×ϕ14×38	4
19	Sleeve	Φ16×Φ10.2×5	4
20	Fixed Pin	ϕ5×17.1	2
21	Pull Pin Shaft	ϕ16×86	2
22	Spring	Φ14×Φ1.0×45	4
23	Pull Pin Cap	Φ11.2-22×16	2
24	Hook Component	39×52×18	2

25	Bolts	M4×8	4
26	Shuttle Spacer	ϕ9.8×ϕ7.4×11	4
27	Shuttle Plastic Base	ϕ90×ϕ61×14.5	1
28	Wheels (OMA-05-09-013)	Φ46×Φ8.0×t18.5)	2
29	Adjustable Feet Pad (OMA-05-07-009)	Φ35×37×12×M8	12
30	Top Pad Foaming	1090×356×124.5	1
31	Bolts	M5×25	10
32	Bolts	M5×12	18
33	Front Pad Foaming	360.5×356×120	1
34	Back Pad Foaming	361x356x120	1
35	Bottom Pad Foaming	907x40x20	2
38	Middle Board	700×295×t5.0	1
39	Moving Axes	ϕ16×50	2
40	Deep Groove Ball Bearing	6905/Φ25×Φ42×9	4
41	Hexagon Lock Nuts	M8	2
42	Bolts	M5×20)	2
43	Bolts	M5×15	2
44	Bolts	Φ8×M6×22	2
45	Bolt	M6×15)	2
46	Circlip For Shaft-E	Φ9	2
47	Circlip For Shaft-E	Φ4	4
48	Bolt	M5×10	8
49	Robotic Arm Outer Shell		4
50	Bolt	M5×25	8
51	Pulley Yoke	Φ50×Φ10×22	2
52	Pulley Yoke	ϕ5×ϕ25×11(605zz bearing*1)	4
53	Circlip For Shaft	Φ20	2

54	Deep Groove Ball Bearing	6904ZZ(TPI)	2
55	Robotic Arm Weldment L		1
56	Robotic Arm Weldment R		1
57	Sleeve (OMA-01-26-501-1)	Φ37×44	2
58	Inner Shaft (OMA-01-26-501-2)	Φ22×40	2
59	Inner Shaft Screws	M4	2
60	Deceleration Motor	LP.M142.FP1/60KG 220VAC 750W	2
61	Motor Electronic Control	L98-100-002/ 60KG 220VAC 750W	2
62	Safety Hook	Φ6×60	2
63	Bobbin Winder Bracket		2
64	Motor Shaft	ϕ25*71	2
65	Circlip For Shaft	Φ17	2
66	Bolts	M6×90×20	8
67	Bolts	M3×10	16
68	Bearing Housing	ϕ75*12	2
69	Deep Groove Ball Bearing	6002-ZZ)	2
70	Reel	Φ99xΦ87x60	2
71	Bolts	M5×10	12
72	Screws	ST4×10	6
73	Bolts	M5×10	6
74	Flat Key	5×5×20	4
75	Shuttle Component L832T	TFT1.54” screen/plastic component silver	1
76	Rocker Switch		1
77	Self-Reset Switch	self-reset switch+nut	1
78	Computer Tail Socket (S-03-11)		1
79	Bolts	M4×8	9
80	Square Cushioning Pad	35×35×T3.0	8

81	Bolts	M6×20	8
82	Left Footboard Frame		1
83	Right Footboard Frame		1
84	Footboard L	500x370x75.5	1
85	Footboard R	500x370x75.5	1
86	Limited Post	Φ15×24-M6	2
87	Limited Post 2	Φ15×28-M6	4
88	Handle Component		1
89	Bolts	M5x30	6
90	Hexagon Lock Nuts	M5	6
91	Flat Washer	Φ8.5×Φ20×t1.5	8
92	Plastic Spacer	Φ5×Φ12×T2.0	33
93	Olympic Barbell Bar	Φ28.2x948-M20X1.5	1
94	Olympic Barbell Bar Copper Bush	23x10.4*t1.0	4
95	Olympic Barbell Bar Cover	42×30×10	2
96	Olympic Barbell Bar Braided Strap	211×20×t1.0	2
97	D Snap Ring	Φ4x25x30	2
98	Olympic Barbell Bar End Cap	Φ30x40-M20X1.5	2
99	Silicone Base	55×40×38	1
100	Remote Control Top Cover	24.3×17.12×4.1	1
101	Remote Control Button Cover	51.8×28.4×8	1
102	L832T Straight Bar remote control	remote control PCB board/1 button /CR2032 battery	1
103	Screws	ST2.6×6	6
104	Hand Shank PCB Board	hand shank/1 button/CR2032 battery	2
105	Hand Shank Sleeve	ϕ30×ϕ30×115	2
106	Buttons	23.5×22.5×8	2

107	Handle Tube	Φ25×Φ20×137	2
108	Hand Shank Braided Strap	t1.0×20×370	2
109	Open-End Cap	41×Φ30×13	2
110	Sealed-End Cap	41×Φ30×13	2
111	Bolts	M2×5	8
112	Bolts	M3×10	8
113	Antenna	Φ10×90	1
114	Speaker Component		1
115	Single Power Board	LM.PW252.FP1/90-264V/320V±3%/	1
116	Terminal Block	2in 6 out/15A	1

When the power supply is 110V: Retain the single power board (**115**) and remove the terminal block (**116**).

When the power supply is 220V: Retain the terminal block (**116**) and remove the single power board (**115**).

04 Package Contents

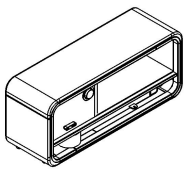	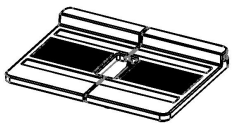	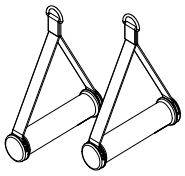	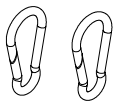
Bench Device*1	Footboard*1	Hand Shank*2 (one pair)	Safety Hook*2 (one pair)
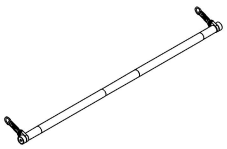			
Barbell Bar*1	Remote Control Unit*1	Power Cord*1	Product Manual*1

05 Assembly Instructions (some components may be pre-assembled in the installation steps)

Step 1：

● Place the device on the level ground. ● Gently turn the two arm switch handles (**14**) on each side in the direction of the arrow without releasing them to slide and unlock. Press the robotic arm (**55**), (**56**) inward with your hand, then immediately release your hand to allow it to automatically pop out. ● Without releasing, turn the two arm switch handles (**14**) on both sides to individually extend the arms (**55**), (**56**) to the 8th position. Then, release the handles (**14**) to lock the arms in place.	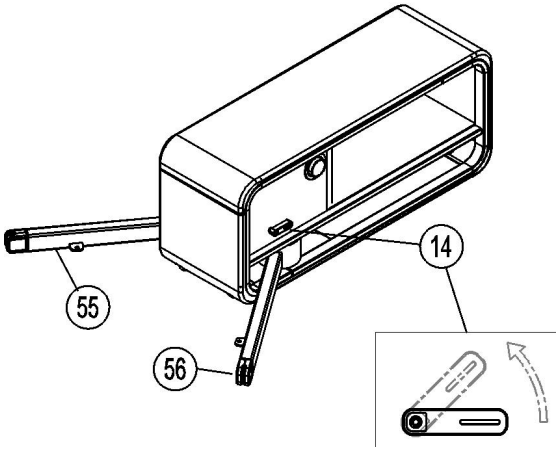

Step 2：

● Open the footboard and observe the notches on both sides. Align each notch with the corresponding tongue on the arms (**55**), (**56**).	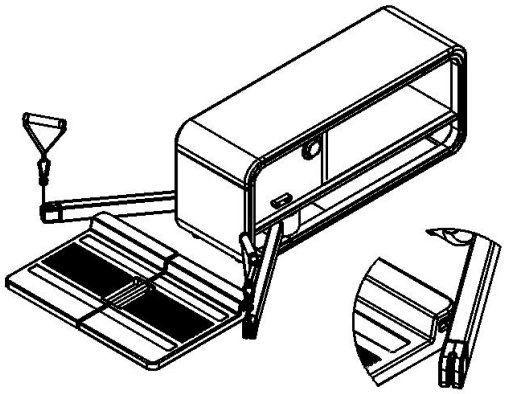

Step3：

● Fasten the safety hooks on both sides. ● Attach the two smart hand shank handles to the safety hooks individually. ● Alternatively, attach the barbell bar to the safety hooks on both sides. ● You are now ready to perform	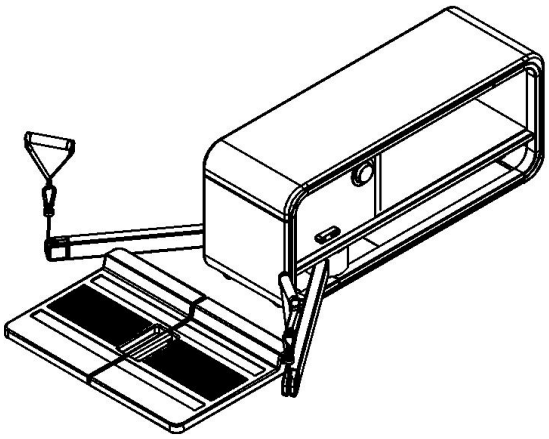

muscle training.	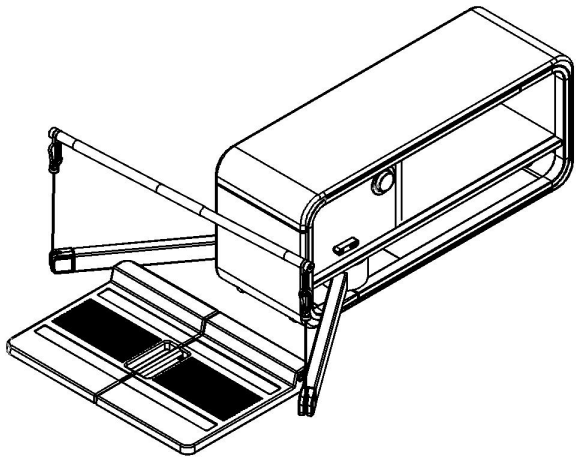

06 Operating Instructions

The robotic arms can be adjusted horizontally

Horizontal Rotation Adjustment (8 positions adjustment)

Adjustment method: Rotate the arm switch handle in the direction of the arrow to slide and unlock. Rotate the robotic arm in the vertical plane to the desired position, then release the rotating handle to lock in the adjustment. There are 8 positions to choose from.

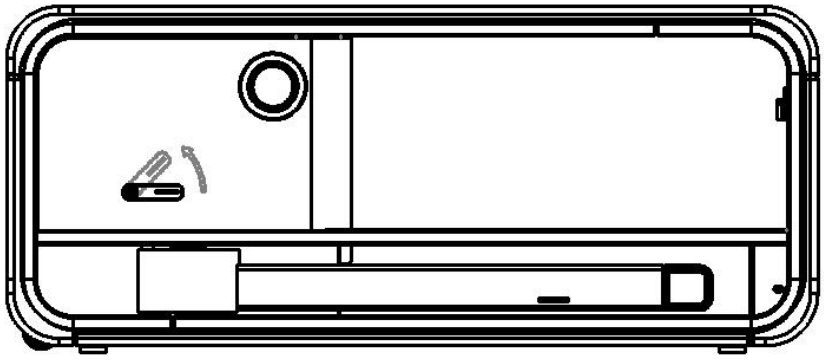

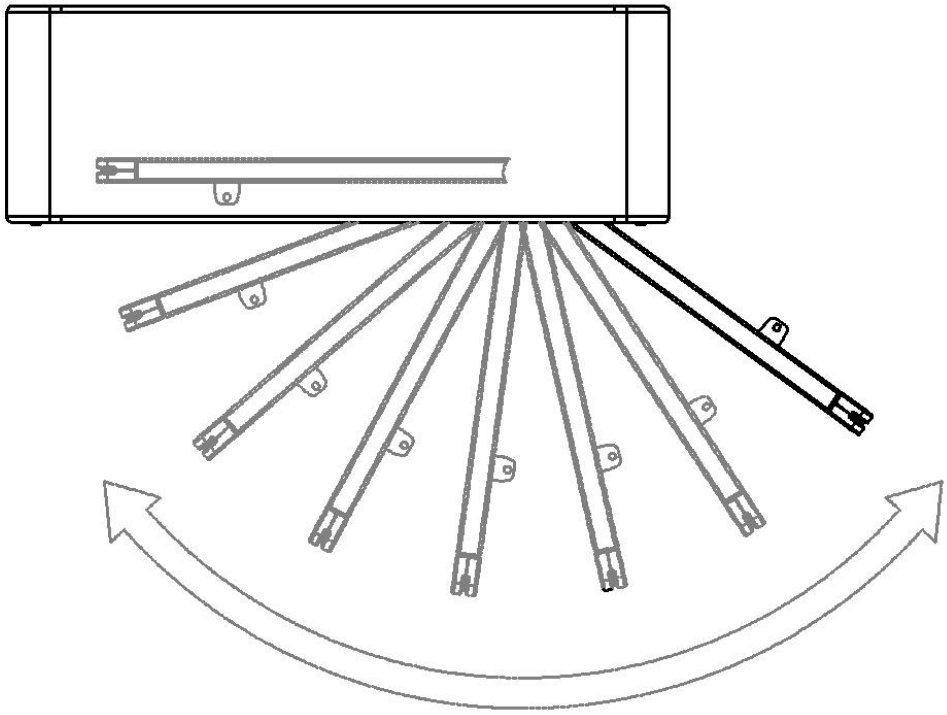

07 Muscle Training Diagram

Scan the QR code, download the App, and access to the muscle training tutorial.

Android App	iOS App

08 Control Instructions

1.1 Startup Initiation Screen

Standard mode

Offcenter mode

Constant speed mo

Remote pairing mode

1.2 Mode Selection Page

Resistance Value Setting
(Standard Mode)

Resistance Value Setting
(Offcenter Mode)

Level Setting
(Constant Mode)

1.3 Resistance Adjustment Page

1.4 Standby Page

1. Control Panel Instructions

1.1 Startup initiation screen

1.2 This page is the mode selection page, rotate the shuttle to switch modes and click to confirm.

1.3 This page is the resistance adjustment page. When the screen value is flashing, it indicates that the resistance is adjustable. During this time, press and hold to return to the mode selection page. Rotate the shuttle clockwise to increase resistance, and click to confirm the resistance (value stop flashing). Clicking return when the value is not flashing will return to the adjustment state. Long press and rotation are ineffective in the stopped flashing state.

1.4 This page is the standby page. If there is no activity for 5 minutes, the device enters standby mode. Click to unlock.

2. Common Malfunction and Troubleshooting

Error Code	Potential Reason	Solution
System not functioning	A. No power connected or turned on	Connect the power or turn the power switch to the "ON" position.
	B. Not powered on	Replace the mainboard.
	C. Circuit is broken	Check the system input and output terminals, as well as the communication lines.
Zero resistance	A. Mainboard driver chip is faulty	Replace the mainboard.
	B. Motor is malfunctioning	Replace the motor
Keypad failure	Keypad is unresponsive	1.Replace the keypad board and keypad ribbon cable. 2. Replace the mainboard.
Incomplete display	A. Electronic system circuit is malfunctioning	Replace the electronic display.
	B. System malfunction	Replace the electronic display.
Inaccurate left & right counting	Sensor malfunction or improper assembly	1. Replace the sensor interface board. 2. Re-install the sensor.

09 Warranty Terms

Within one year of normal usage, and if not damaged due to human error, we offer free on-site repairs or provide replacement parts for the user. After the warranty period expires, paid services are also available. If your product requires paid service, please get in touch with the local distributors. For more details, please refer to the product warranty card.

Important Information

This warranty card is included with each product and is to be filled out by the distributor. During the warranty period, free replacement components is provided. We are not responsible for malfunctions caused by incorrect installation, improper use, or modifications to the equipment.

Additionally, this warranty card is not valid for individuals unauthorized by our company for repairs. Any resulting repairs, the user must provide an invoice, without any receipt or warranty card, the warranty card is invalidated.
This product is intended by household use only, we are not responsible for any issues arising from commercial use. If your product require repair service, please contact your local distributor!
The entire product is covered by 1-year warranty.

Purchase Date	
Customer Name	
Address	
Phone	
Warranty Period	
Distributor	
Note	