FAN LIGHT
USER MANUAL

Please read this manual carefully before use.
Please keep it properly for reference.

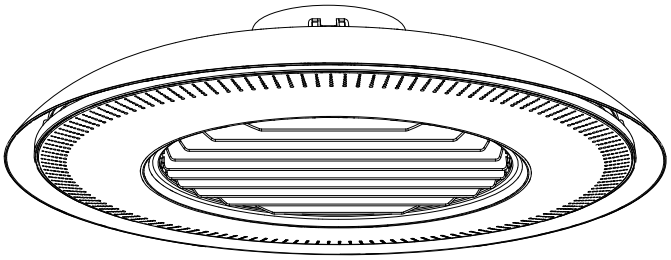

1.Product structure composition

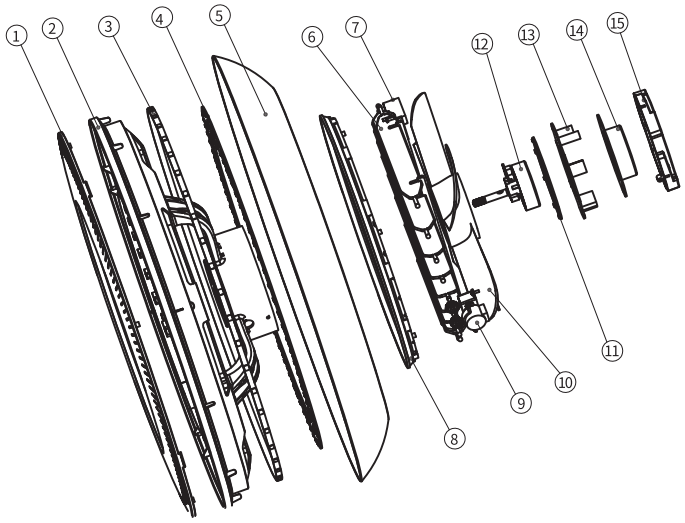

1.Panel	5.Cover	9.Stepper motor	13.PCB board
2.Fixing plate	6.Wind guide blades	10.12-inch blades	14.Motor cover
3.Ambient light	7.Anion generator	11.UV germicidal lamp	15.Mounting bracket
4.Lamp	8.Bottom cover	12.BLDC motor	

2.Technical Parameters

Model	XU-12F	Rated frequency	50/60Hz
Specification	550X550X140mm	Main light power	42W
Rated voltage	100-240V AC	Fan power	18W
Control method	Remote control	Lamp power	3W
Wind mode	Normal/Natural/ Powerful/Sleep	Air supply mode	Guide vane swing
Fan motor	DC brushless motor	Additional features	Negative ions, UV sterilization

3.Instructions for use

Remote control instructions

1. The fan with light will record the last working status of the fan, main light, ambient light, and other functions. When turn on the item, it will automatically restart the last memoried working status.

2. Press the ON/OFF button to turn on the item, buzzer beeps and activates the functions. Press the ON/OFF button to turn off the item, buzzer beeps again and stops to work.

3. The functions of natural wind, sleep wind, negative ion and sterilization can only be activated when the fan rotates clockwise.

4. Remote control pairing: press the " " button to turn off the item, and press the " " button three times with a beep tone, then press the " " button twice with two beep tones to complete the remote and machine pairing.

5. Remote control decoding: Press the " " button to turn off the item, and press the " " botton three times with a beep tone, then press the " " button twice with three beep tones to complete the remote and machine decoding.

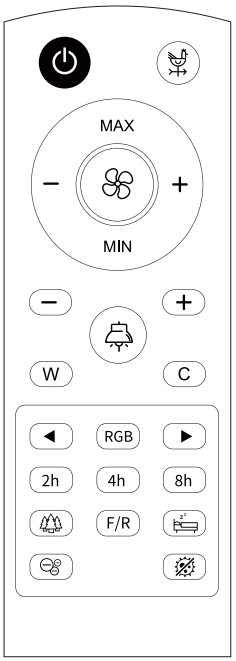

	icon	Function	Instructions for use
		ON/OFF	Press the "ON/OFF" button, the fan and the main light will work in the default state at the first time. Press the button again to turn off the item.
Fan		Guide vane	Press the "Guide vane" button to turn on the wind guide mode. The fan guide vane will swing 60 ° back and forth. Press the button again to settle the fan guide vane.
		Fan	Press the "Fan" button to turn on the fan. Press the button again to turn off.
	+	Fan speed +	Press the "+" button to increase the fan speed in the current gear. The maximum fan speed is 6 gear.
	–	Fan speed -	Press the "-" button to decrease the fan speed in the current gear. The minimum fan speed is 1 gear.
	MAX	Max fan speed	Press the "MAX" button to set the fan will work at 6 gear.
	MIN	Min fan speed	Press the "MIN" button to set the fan will work at 1 gear.

Main light	+	Brightness+	Press the "+" button to increase the main light brightness. The maximum brightness is 12 gear.
	–	Brightness-	Press the "-" button to decrease the main light brightness. The minimum brightness is 1 gear.
		Warm white light (natural light)	Press the main light button to turn on the warm white light. Press the button again to turn off.
	W	Yellow light (warm light)	Press the "W" button to turn on the warm yellow light. Press the button again to turn off.
	C	White light (cold light)	Press the "C" button to turn on the cold white light. Press the button again to turn off.
Ambient light	▶	Brightness+	Press the "+" button to increase the ambient light brightness. The maximum brightness is 12 gear.
	◀	Brightness-	Press the "-" button to decrease the ambient light brightness. The minimum brightness is 1 gear.
	RGB	Ambient light	Press the "Ambient light" button to turn on the lake blue ambient light→ red ambient light→ green ambient light → blue ambient lights in turn and then press the button again to turn off. (Turn on and switch the ambient light with one beep tone. Turn off the ambient light with two beep tones.)
Timer	2h	2H timer	Press the "2H" button to set the fan timer. Press the button again to cancel the timer.
	4h	4H timer	Press the "4H" button to set the fan timer. Press the button again to cancel the timer.
	8h	8H timer	Press the "8H" button to set the fan timer. Press the button again to cancel the timer.
Additional functions		Natural wind	Press the "Natural Wind" button to immerse yourself in the natural wind mode. Experience the true fluctuations of nature and recreate the unpredictability of the outdoors. Press the button again to stop.
		Sleeping wind	Press the"Sleep mode"button. Experience gradually lowering fan speeds that reflect the calming breeze, until you reach the lowest wind speed setting for the quietest sleep possible. Press the button again to deactivate sleep mode.
	F/R	CW/CCW	Press the "F/R" button to set the fan to rotate counterclockwise. Press the button again to set the fan to rotate clockwise.
		Negative Ion	Press the "Negative Ion" button, the yellow ambient light will flash, and the negative ion generator will start to work. Press the button again, the blue ambient light will flash, and the negative ion generator will stop to work.

		Sterilization	Press the "Sterilization" button, the purple ambient light will flash, and the ultraviolet light will start to work. Press the button again, the purple ambient light will flash, and the ultraviolet light will stop to work.

4.Installation Notes

1. Installation instructions of mounting bracket

Figure 1

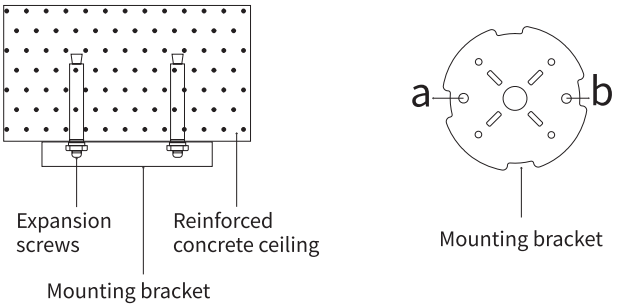

⚠ Note: The mounting bracket cannot be installed on a water leaking or moist ceiling. After installing the mounting bracket, it needs to be able to bear more than 40 kg item to prevent falling off from the ceiling.

1. Before installing the mounting bracket on a concrete ceiling, drill two holes on the ceiling with an electric drill (the distance between the two holes is the distance between the “a” hole and the “b” hole on the mounting bracket). Insert the expansion screws into the holes. Pass the ceiling embedded power cord through the hole in the middle of the mounting bracket. Install the mounting bracket into the expansion screws. Insert the flat washers and nuts, and lock them with a movable wrench (As shown in Figure 1).

Figure 2

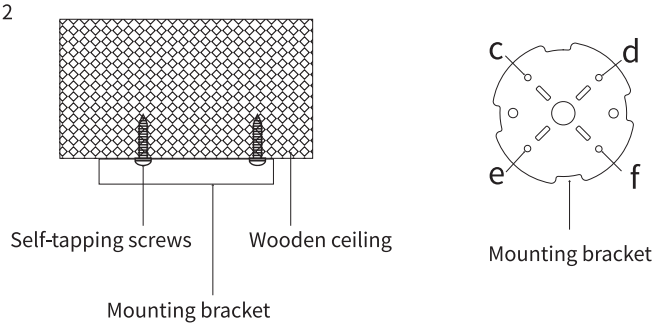

2. Before installing on the wooden ceiling, pass the ceiling embedded power cord through the hole in the middle of the mounting bracket. Insert the flat washers into the self-tapping screws. Then use a screwdriver to insert them into the four small holes of the mounting bracket. Lock the mounting bracket on the ceiling (As shown in Figure 2).

⚠ Note: The mounting bracket cannot be installed on an uneven ceiling. The ceiling installation of mounting bracket should be firm and not loose.

2.Connect safety rope

Figure 3

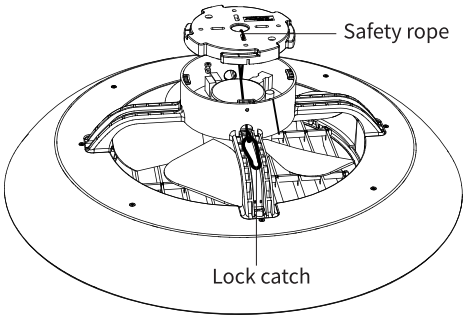

1. Pass one end of the safety rope on the mounting bracket through the cable hole on the fuselage and install a lock catch to secure it. This operation ensures that the product is firmly installed and will not fall off. (As shown in Figure 3)

3. Precautions for connecting the power cord

Figure 4

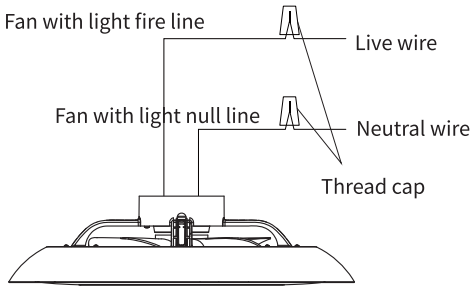

1. After the installation of the mounting bracket, insert the live line and neutral wire of the fan with light into the wire connector respectively, and then turn clockwise to tighten, the connection is complete. (As shown in Figure 4)

⚠ Note: The fixed line which the appliance is connected with must be equipped with an all-pole disconnection device with a contact distance no less than 3mm.

4. Installation instructions for fan with light

Figure 5

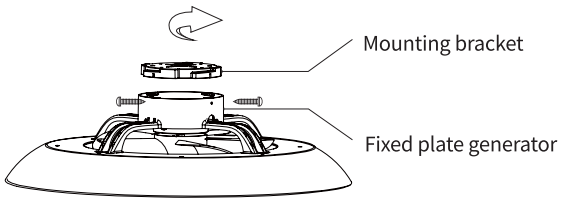

1. After the power cord is connected, put the fixing plate on the mounting bracket and turn it anticlockwise to fix it. Install the screws into the two holes on the fixing plate, and lock the fan with light on the mounting bracket (As shown in Figure 5)

2. After the whole machine is installed, check whether all screws are tightened. Turn on the power and check whether the air circulation fan operates normally. Wait for the fan to work for 10 minutes, and turn off the power to confirm that all screws and coils on the fan with light are not loose. Check whether the remote control works normally.

6. Cleaning and maintenance

1. Before cleaning, maintaining and moving the product, the power supply must be disconnected.
2. Water or other liquids are not allowed to enter the motor.
3. If there is stain on the surface of the machine, you can wipe it with a soft cloth soaked with soap. Do not use gasoline, alcohol and other solvents.
4. If it is necessary to disassemble the protective housing of the fan for cleaning, please ensure that the power supply must be disconnected before disassembling.

5. Safety instructions

Before installing the fan with light, please read the following safety instructions carefully and keep the manual for future use.
1. In order to reduce the occurrence of an electric shock accident, an all-pole disconnect switch must be installed between the fan with light and the power supply line (the contact distance of the switch is required to exceed 3mm). If you do not have sufficient knowledge of electrical installation, please ask an expert with electrical license to install the fan with light.
2. In order to avoid the risk of electric shock, please turn off the power supply before installing the fan with light.
3. In order to reduce the occurrence of electric shock or fire, please do not use switch that is not specified in this product.
4. When installing the fan with light, all the screws should be firmly locked.
5. In order to avoid danger, do not touch the blades with any object when the fan with light is working.
6. Please select a suitable place and a high enough position to install the fan with light. The fan with light should be installed at least 2.3 meters above the ground to prevent accidental collision with the blades.
7. Before installing the fan with light, please read the fan installation procedure carefully.

FCC Statement:

This device complies with part 15 of the FCC Rules. Operation is subject to the following two conditions:

(1) This device may not cause harmful interference, and

(2) this device must accept any interference received, including interference that may cause undesired operation.

This equipment has been tested and found to comply with the limits for a Class B digital device, pursuant to part 15 of the FCC Rules. These limits are designed to provide reasonable protection against harmful interference in a residential installation. This equipment generates, uses and can radiate radio frequency energy and, if not installed and used in accordance with the instructions, may cause harmful interference to radio communications. However, there is no guarant ee that interference will not occur in a particular installation. If this equipment does cause harmful interference to radio or television reception, which can be determined by turning the equipment off and on, the user is encouraged to try to correct the interference by one or more of the following measures:

—Reorient or relocate the receiving antenna.

—Increase the separation between the equipment and receiver.

—Connect the equipment into an outlet on a circuit different from that to which the receiver is connected.

—Consult the dealer or an experienced radio/TV technician for help.

Caution: Any changes or modifications not expressly approved by the party responsible for compliance could void the user's authority to operate the equipment.

This equipment complies with FCC radiation exposure limits set forth for an uncontrolled environm ent. This transmitter must not be co-located or operating in conjunction with any other antenna or transmitter.