CART S Headset User Manual

Document approval

Role	Date	First and Last Name	Signature
Product Engineer	29/04/24	Vasco José de Melo	
Head of product development	30/04/24	Arnaud Legros	
Production Manager	07/05/24	Eduardo Gomez	
Head of Electronic Engineering	07/05/24	Wladimir De la Candena	
Head of Business Development	30/04/24	Roman Brunner	
General Manager	14/05/24	Cedric Spaas	

Document change history

Version	Date	Author	Description of the change
v1.0: Edition 03.2024	2024-03-10	Vasco José de Melo	First version

CART S

Variants names: CART S M & CART S A
Catalog numbers: 900.0005.XX & 900.0025.XX (XX going from 00 to 99)
Operating system: Android 10

User Manual

CART S Headset User Manual
Edition 03.2024
Language: English

ARVICOM S.a.r.l.
20 Rue du Commerce
3895 Foetz, Luxembourg
contact@arvicom.eu
+352 691 722 733

Table of contents

1 System Overview 3
2 About this Manual 3
2.1 General Indications 3
2.2 Symbol Explanation 3
2.3 Copyright 3
2.4 Contact Details 3
3 Equipment Overview 4
3.1 Headset: CART S 4
3.2 Power Unit 6
4 Charging the Headset & Power Unit 7
4.1 Charging the CART S Headset 7
4.2 Charging the Power Unit 7
5 Turning on the Headset 8
6 Wearing the Headset 8
7 Access and Control the Headset 9
7.1 Via a Computer 9
7.2 Via a Peripheral Device 9
8 Storage, Maintenance and Cleaning 10
8.1 Storage of the Headset and Accessories 10
8.2 Cleaning of the Headset 10
8.2.1 Required Material 10
8.2.2 Headset Cleaning Instructions 10

1 System Overview

Thank you for choosing to use the CART S Headset from ARVICOM.

The CART S Headset is a stand-alone fully see-through Augmented Reality (AR) device allowing visualization, streaming and mirroring of digital content in the direct sight of the user for a complete hands-free experience. This android-based Headset, together with its SDKs, constitute an extensive development platform for the integration with your hardware and software for the creation of AR applications. The embedded front camera enables the recording and streaming of the user actions for assistance and training purposes. The integrated microphones and speakers allow audio communication and/or recording.

The lightest solution (M model) is powered by the belt mounted Power Unit that provides full power for uninterrupted autonomy in lengthy use cases.

Ready to be used right out of the box, including:

1	Headset
2	Power Unit (only with M model)
3	USB-C power cable
4	USB-C charging adapter
5	Additional protective visor (shaded)
6	User Manual / Safety and Regulatory Guide
7	Shell and foam case for storage

At delivery if the package shows any damage or has been opened, please don't use the devices and contact ARVICOM for support.

If any component is missing or damaged, do not use the kit and contact ARVICOM for support.

2 About this Manual

2.1 General Indications

Incorrect handling and improper use can pose hazards and cause damage. We therefore ask you to carefully read and follow these instructions for use. Please consult the provided "Safety, Regulatory and Warranty Guide" to avoid personal injury and damage to property.

This manual contains information intended to ensure the safe, effective, and compliant use of the product.
Optional items, hardware and software mentioned in this manual may not be provided in the product or subject to upgrades.
Images and screenshots are representative of a specific product version that may differ in appearance from the actual product.

2.2 Symbol Explanation

The following symbol is used thought this document to gain the users attention:

Symbol	Meaning
	Important information to pay attention by the operator that can affect the product recommended functioning.

2.3 Copyright

© 2024 ARVICOM. All rights reserved.

This manual and its contents are protected by copyright law and international treaties. No part of this manual may be reproduced, stored in a retrieval system, or transmitted in any form or by any means, electronic, without the prior written permission of ARVICOM.

ARVICOM reserves the right to revise this manual and make changes to the specifications of equipment described in this manual at any time without notice.

2.4 Contact Details

If you have any questions regarding this document or the use of the device, please contact our customer service by email or to the phone number below.

Europe
ARVICOM S.a.r.l.
20 Rue du Commerce
3895 Foetz, Luxembourg
contact@arvicom.eu
Phone: +352 691 722 733

3 Equipment Overview

3.1 Headset: CART S

ARVICOM's Headset, CART S, is a stand-alone fully see-through AR device allowing wireless communication with external devices, for the visualization of streamed data and instructions in the direct sight of the user.

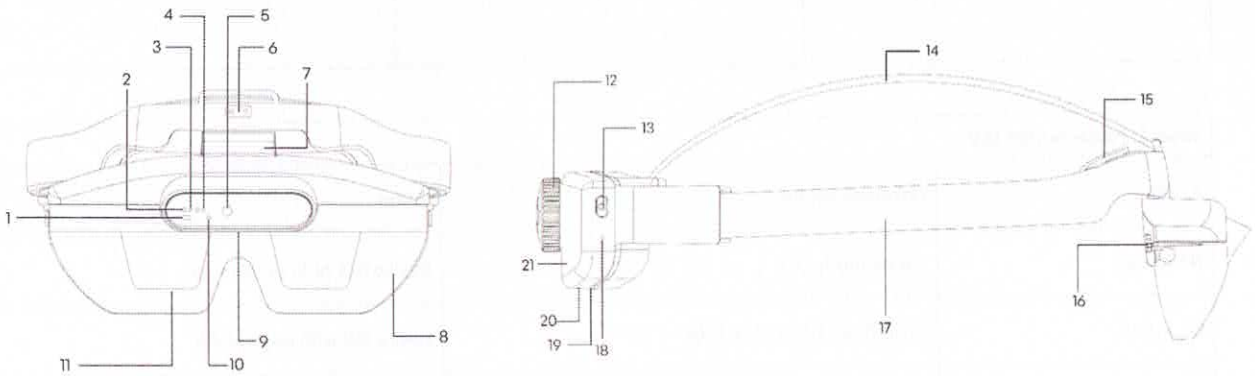

#	Feature	Description
1	3D depth sensor	Time-of-flight sensor allowing to detect movements in the user's field of view.
2	Front torch	Flashing light informing Headset booth up and can be used as a torch.
3	Low battery LED	Red LED flashing when low battery (<20%) on the Headset.
4	Ambient light sensor	Sensor measuring ambient light intensity.
5	Front camera	High resolution RGB camera of 20Mpx.
6	Accessory connector	Connector to attach accessories (e.g. Headlight).
7	Hinge	Adjustment mechanism to place the AR glasses in front of the eyes.
8	Protective visor	Visor to protect the user's eyes and the AR displays from splashes.
9	Voice microphone	Microphone to record the voice of the Headset user.

#	Feature	Description
12	Adjustment wheel	Ratchet wheel to adjust the headband size.
13	Power button	Clickable button to switch the device and displays ON/OFF by long pressing (> 3 seconds)
14	Adjustable Head-strap	Removable and adjustable tissue strap for better support of the Headset over the scalp.
15	Forehead padding	Magnetically attached foam padding for the user's wearing comfort.
16	Speakers	Integrated left and right speakers providing audio to the Headset user.
17	Headband	Adjustable band comfortably holding the Headset on the user's head.
18	Power button LED	White LED next to the power button indicating activity status of the device.
19	USB-C connector	USB interface to charge and provide power to the Headset.
20	Back status LED	White LED next to the USB port indicating the charging status.

10	Camera LED	White LED turning on when front camera is active.
11	AR display	AR fully see-through display to project digital content on the user's field of view.

21	Black enclosure	Enclosure containing: · Compact processing technology · Internal battery pack

Detachable parts		
Adjustable head-strap	Protective visor: Transparent & Shaded	Forehead padding

Table 1: Power button LED

Action	LED Observation	Status
No Action	Continuously OFF	Device OFF or in sleep mode
No Action	Cyclic flash: ON: 1s / OFF: 6s	Device ON with displays ON
Plugged	Cyclic flash: ON: 4s / OFF: 1s	Device OFF and charging
Short press	No flash	Empty battery
	Flash	Device has battery
Long press	No flash	Empty battery
	Flash	Device boots up or turns OFF

Table 2: Back status LED

Action	LED Observation	Status
Plugged	ON & Bright	Charging ongoing
Plugged	OFF	Charging completed

Table 3: Front torch

Action	LED Observation	Status
Cable Plugged	Cyclic Flash: ON: 0.5s / OFF: 5s	Device OFF & charging

Table 4: Low battery LED

Action	LED Observation	Status
No Action	Cyclic Red Flash: ON: 0.5s / OFF: 3.5s	Device ON & battery level under <15%

3.2 Power Unit

Specially designed to support all Headsets provided by ARVICOM, the belt mounted Power Unit provides additional power autonomy. Its hot swappable capacity enables uninterrupted autonomy for lengthy use cases.

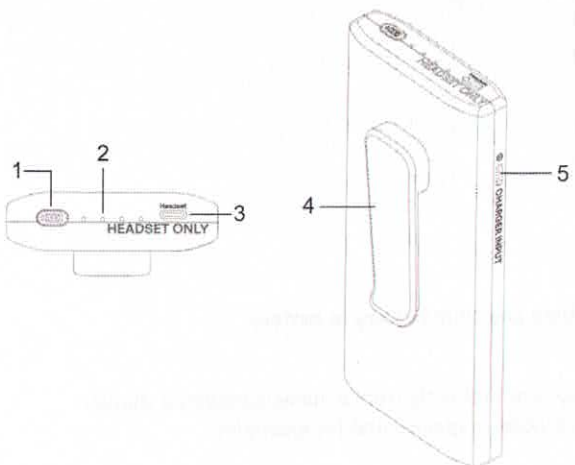

#	Feature	Description
1	Battery status button	Short press button to visualize the battery level indicators.
2	Battery level indicators	LEDs activated by the battery status button, providing the current battery level of the Power Unit. 1 LED: < 25% 2 LEDs: 25% - 49% 3 LEDs: 50% - 74% 4 LEDs: > 75%
3	USB-C Headset connector	USB-C interface for charging the Headset (output current only).
4	Belt clip	Holding feature allows to fasten the Power Unit on the user's belt or waistband.
5	USB-C charging connector	USB-C interface for charging the Power Unit (input current only).

4 Charging the Headset & Power Unit

Only use adapters and cables provided by ARVICOM to avoid hazards and ensure electromagnetic compliance.

4.1 Charging the CART S Headset

Before each use, the following steps should be followed to charge the CART S Headset:

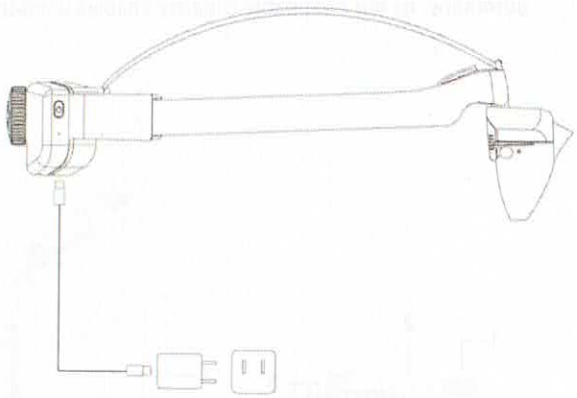

- Using the provided adapter and USB-C cable, connect the Headset to a wall socket. The back status LED illuminates permanently, indicating the charging is ongoing. In case of inactivity, please double check all the connections by unplugging and plugging them again.
- The LED will turn OFF when the charging is completed. Full charging duration (0% to 100%):
  - CART S M: Up to 2 hours
  - CART S A: Up to 5 hours

These are estimates as the chemistry can fluctuate overtime and from battery to battery.

CART S Headset cannot be used while being charged directly or indirectly from a mains-connected charger. Charged indirectly means connecting to the mains via an accessory (power unit for example).

4.2 Charging the Power Unit

Before each use, the Power Unit should be fully charged. To charge the Power Unit, use the provided adapter to connect the Power Unit to a power socket. The battery status indicators start blinking and show the charging level. The battery level can be monitored by pressing on the battery status button.

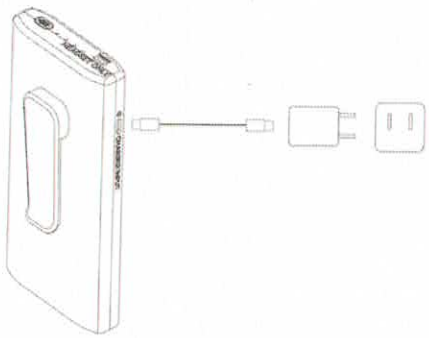

Full charging duration (0 to 100%): Up to 5 hours

These are estimates as the chemistry can fluctuate overtime and from battery to battery.

5 Turning on the Headset

CART S Headset cannot be used while being charged directly or indirectly from a mains-connected charger. Charged indirectly means connecting to the mains via an accessory (power unit for example).

When using the CART S Headset, always connect the Power Unit with the provided USB-C cable.

To properly setup your CART S Headset, follow the steps below:

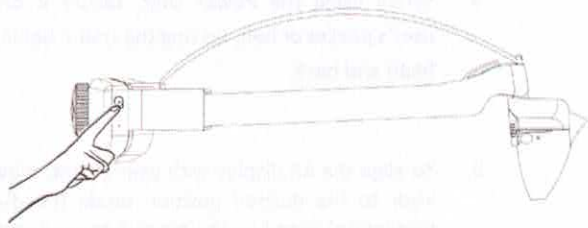

1. **Headset battery shall be fully charged** and the surfaces should be clean, free of dirt (specially the AR display & visor). If needed, please follow the cleaning instructions described in section 8.

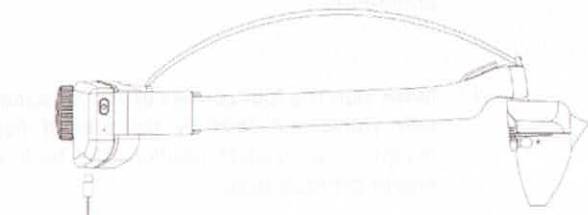

2. **Turn on the Headset** by long pressing (>3 seconds) the power button. Verify that the power button LED turns on. After a couple of seconds, the virtual screen appears on the display.

3. If necessary (M model mandatory), **connect the charged Power Unit** to the Headset by using the provided USB-C cable. On the power unit, plug the cable USB-C port on the top where is written "Headset Only".

4. **Place the Headset on the head** by following steps in the section 6.

6 Wearing the Headset

To avoid head discomfort and skin marks, do not over tighten the adjustment wheel. The Headset should fit comfortably, firm but not too tight. The weight should primarily rest on the head strap, while the front padding and headband ensure a stable position. Headset is designed for use with normal glasses.

Fit the Headset on user's head:

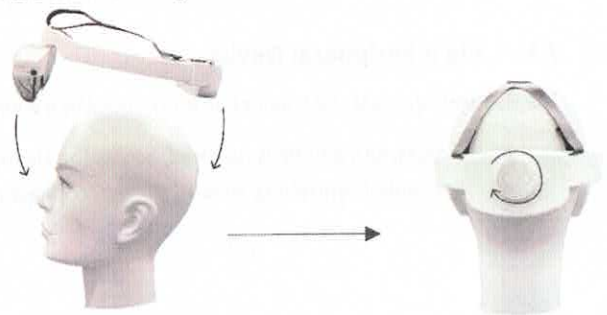

1. Open the headstrap by pulling the Velcro and open the headband size by turning the back wheel counter clockwise. Place the Headset on your head and turn the back wheel clockwise to decrease the headband size until a slight pressure is felt on the contact areas.

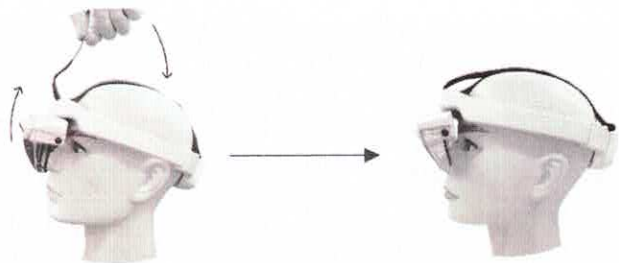

2. Grasp the Velcro and adjust the strap to bring the displays at eye level. Fasten the Velcro to secure the Headset at the preferred height.

3. When the AR display is not in usage, lift the display in standby position (horizontal).

4. When using the Power Unit, secure it on the user's pocket or belt, leaving the USB-C behind his head and back.

5. To align the AR display with user's sight, move the visor to the desired position mode (head-up or navigation) based on the procedure type and your preferences.

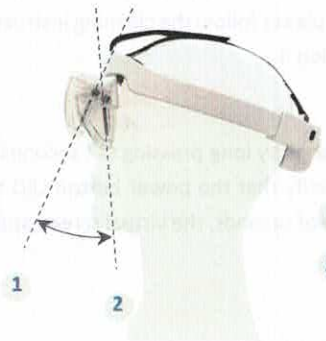

1 Head-up display mode

2 Navigation display mode

6. Make sure the four corners of the AR screen are fully visible and clear by the user. If needed, readjust the Headset position, the back wheel and/or the head strap.

7 Access and Control the Headset

7.1 Via a Computer

Connect the Headset to a Windows or Ubuntu computer with the provided USB-C to USB-C cable, and if needed use a USB-C to USB-A certified adapter.

Two ways are possible to access and control the Headset:

- Using a PC visualizer application (i.e. Vysor): Platform to access and allow the visualization in real-time of the android OS interface from any laptop while plugged or wirelessly.
- Using Android Debug Bridge (adb): Versatile command-line tool that lets you communicate with the android device. The adb command facilitates a variety of device actions, such as installing and debugging your apps.

7.2 Via a Peripheral Device

The Headset supports the connection and control by a wireless or cabled mouse, keyboard, joystick and any sort of controller.

- If Bluetooth pairing is required, access the Headset Android settings via a computer.
- For cabled controlling devices, directly connect it in the USB-C port on the Headset with the appropriate adapter.

8 Storage, Maintenance and Cleaning

8.1 Storage of the Headset and Accessories

Before storing the components in the transporting case, clean them following the instructions steps section 8.2.

When not in use, the Headset and all the components should be stored in the provided transporting cases to minimize improper manipulation and/or contamination. Each item should be inserted inside its dedicated slot.
The transporting case should be kept in a cool and dry place, away from direct heat, excessive humidity, and magnetism. The following table gathers the optimal storage parameters.

Category	Indication
Storage relative humidity	35–85% - non condensing
Storage Temperature	Less than 1 month: 0°C to 45°C (32°F to 113°F)
	Less than 6 months: 0°C to 35°C (32°F to 95°F)

8.2 Cleaning of the Headset

8.2.1 Required Material

- **70% Isopropyl Alcohol:** For cleaning and disinfection of plastic surfaces (except the visor).
- **Eyeglasses Cleaning Solution:** For cleaning of AR display.
- **Mix of Distilled Water & Mild Soap** (ex: pH-neutral, dishwashing liquid): For cleaning of the visor.
- **Protection Equipment**: Follow the solution providers safety data sheet.
- **Dry Microfiber Cloths:** Choose lint-free, non-abrasive materials.

8.2.2 Headset Cleaning Instructions

It is not recommended to leave the Headset without the protective visor to ensure the proper AR display protection.

Between each usage, the Headset should be cleaned wearing disposable gloves according to the following instructions:

1 **Power off the Headset:** Ensure the Headset is turned off by pressing the power button for 3 seconds and unplugged from any electrical power source. Ensure the Headlight is turned off.

2 **Take off the Detachable Parts:** Detach the head strap, the Headlight and forehead padding. For the protective visor by applying a slight force towards the front of the device until the side latches unclip, on one side after the other.

3 **Dust Removal:** Use a clean, dry microfiber cloth to remove loose dust and debris from the Headset's surface and openings.

4 **Cleaning and Disinfecting Plastic Surfaces:** Gently wipe down all external surfaces of the Headset with 70% isopropyl alcohol dampen cloth. Wipe all the plastic surfaces of the Headset and all the detachable parts (except the visor). Be careful not to let any excess liquid enter the device's openings, such as ports or vents.

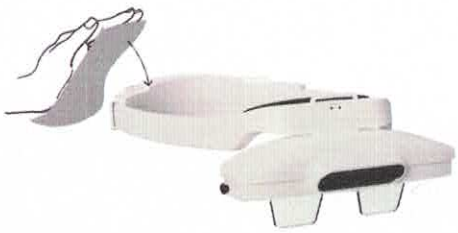

5 **Cleaning and Disinfecting AR display and Sensor glass:** Gently wipe down the both sides of the glass display and the Sensor glass with the lint-free cloth priorly sprayed with the eyeglasses cleaning solution.

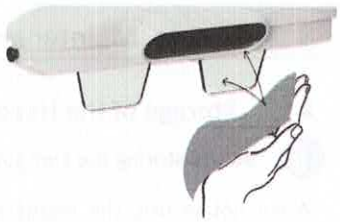

6 **Cleaning the Visor Surface:** Gently wipe the visor surfaces lint-free cloth priorly sprayed with the distilled water & soap mix. Do not use alcohol-based solutions, as they can damage the visor's surface or anti-fog coating.

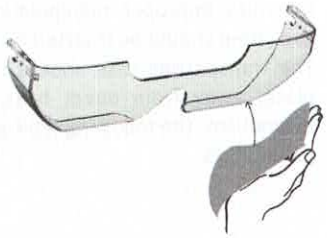

7 **Final Drying:** Allow the device and visor to air dry for at least 3 minutes.

8 **Reassemble:** After all moisture has evaporated, reattach the head strap and forehead pad. Attach the visor back on the Headset by clipping it on one side after the other.

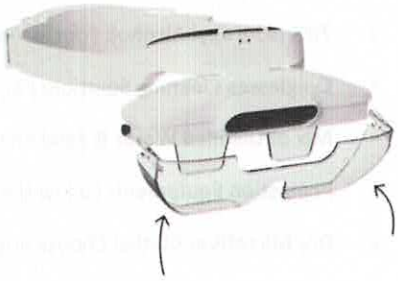

9 **Storage:** Store the devices in the transporting cases.

Clean the provided accessories by following steps 3, 4 and 7 to 9.

CART & CART S

Safety, Regulatory and Warranty guide

Edition 03.2024

Language: ENGLISH

This guide provides important safety, regulatory, and warranty information that you should carefully read before using your CART or CART S Headset, to avoid damaging your device and to reduce the risk of personal injury, discomfort, property damage, or other potential hazards. The information and visuals included in this document may be subject to change without notice.
In addition, make sure to read the User Manual provided with the product.

If you have any questions regarding this guide or the use of the device, please contact ARVICOM by email or phone number below.

ARVICOM S.a.r.l.
20 Rue du Commerce
3895 Foetz, Luxembourg
contact@arvicom.eu
+352 691 722 733

1 Safety Information

1.1 General warnings

Dust and water resistance

Your equipment is not waterproof; keep the equipment away from water or liquids. Water or liquid entering the equipment may cause a short circuit, resulting in electric shock or fire. In the event of liquid penetration inside the equipment, disconnect from any power supply and contact ARVICOM customer service. To lower the risk of fire, shock, or damaging the equipment, please follow the guidelines below:

- Do not expose the equipment to rain, snow, or other types of moisture.
- Avoid using the equipment inside or close to highly humid places (e.g. a shower, a bath tub, or a sink).
- Do not dry the equipment with heat sources, hair or clothes dryers, toasters, or microwave oven. If your device becomes wet, gently wipe the exterior with a clean, dry cloth and contact ARVICOM customer service.

Maintenance and Cleaning:

Keep the devices clean and dry so they are not covered with dust. Follow the maintenance and cleaning instructions provided in the User Manual to reduce the risk of fire, electric shock or damaging your device. Do not attempt to clean inside the ports, vents, hinges and other openings with a wet cloth. Self-servicing or tampering the leads to a cancellation of the warranty services provided by ARVICOM.

Do not expose the devices to any chemical substances except alcohol-based cleaning solutions (described in the provided product User manual). Do not perform heat or chemical sterilization methods on any device.

Repairing & Battery Risks:

Do not modify, open, and/or repair the equipment yourself. It can present serious electrical shock, device damage, fire, and personal injury risks. Equipment opening, repair, battery replacement and disposal are to be handled only by ARVICOM service and support team or other trained personnel.

Always follow the proper charging procedure outlined in User Manual. Do not attempt to heat, open, puncture, or dispose your equipment or its battery in a fire, to avoid any risk of damage or melting the battery.

Electrical safety:

We recommend only the use of ARVICOM AC power supplies, power adapters, and cords for charging and the power supply of your original equipment.
Always confirm that your AC power wall outlet provides the proper power requirements in terms of voltage and frequency as written on ARVICOM power adapter.
Using unauthorized equipment can damage the devices, leading to potential harm like battery damage, electric shocks, fire, and other related injuries to the user and the environment.
To handle the cords and AC adapter with care, preventing electric shock, injury, fire or damage to your ARVICOM devices, please read the guidelines below:

- Do not touch with wet hands.
- Do not insert or attempt to clean the fan, vents, hinges, or other openings with sharp objects.
- Do not use a damaged. When loose cable contact ARVICOM.
- Always firmly insert the power cables and adapters into the connectors and wall sockets.
- Do not unplug the power adapter by pulling it by the cable only. Do it by firmly holding the body of the adapter.
- Inspect the power cord regularly. If a power cords present wearing and damaging signs stop using it immediately and replace it by a new ARVICOM power cord.
- Expose and organize the equipment cords and adapters in a safe manner so that people are not likely to walk on, trip over or accidentally pull on them as they move around the area.

IT Safety and Cybersecurity:

To prevent data theft, unauthorized access or damage to your equipment, read the safety recommendations below:

- Only use the operating system and firmware provided by ARVICOM. The adequate versions are already installed on the delivered equipment. Future updates of the operating system and firmware are conducted by the ARVICOM service and support team.
- Your equipment and related software shall be used by trained personnel only.
- When Wi-Fi connectivity is required, ensure the equipment is connected to a secure and password-protected network. Avoid using unsecured public Wi-Fi networks to prevent unauthorized access to your device.

- When using Bluetooth features, be cautious about pairing your equipment with unknown or unauthorized devices. Only connect to trusted and secure devices.

Radio frequency (RF) interference

RF emissions and magnetic fields from electronic equipment can interfere with the proper functioning of other nearby electronic equipment. This equipment has been designed, manufactured and tested to comply with the Federal Communications Commission (FCC) and European Directives regarding RF emission. However, to minimize the risks of unintentional interference with for example medical equipment, vehicles, aircrafts, heavy machinery, we recommend to adhere to the following guidelines:

- While using the headset maintain a safe distance from electronic devices and equipment, especially medical devices, such as pacemakers, implantable cardioverter-defibrillators (ICDs), infusion pumps, and monitoring devices. Consult healthcare professionals for specific distance recommendations.
- Turn off the headset when not in use to prevent unnecessary RF emissions.
- If experiencing any unusual symptoms or interference while using the headset, discontinue use and contact ARVICOM service and support team as soon as possible.

Augmented Reality (AR) specific warnings

Eye Safety & Motion Sickness:

Prolonged use of the ARVICOM headsets may cause eyestrain, discomfort or motion sickness. Make sure the device is properly adjusted to your head by following instructions in the User Manual. Start with short sessions and gradually increase usage to acclimate to the AR experience. If you experience punctual discomfort, take regular breaks. If any symptoms of discomfort persist, discontinue use and consult a doctor.

Photosensitive Epileptic Seizures:

Some individuals may experience photosensitive epileptic seizures when exposed to flashing lights or patterns. If you have a history of epilepsy or seizures, consult a doctor before using ARVICOM headsets.

Using Environment:

Stay vigilant of your environment when using ARVICOM headsets. The augmented reality content projected can potentially divert your attention. Ensure usage occurs solely in safe, controlled settings devoid of risky activities like walking, sports, driving, or operating machinery.
To ensure electronic safety, the device should be used in an environment with temperature between 0°C and 35°C and a maximum altitude of 2000m above the sea level.

Heat Dissipation:

Your ARVICOM headset may generate heat during use. It complies with the user-accessible surface temperature limits defined by the International Standards for Safety (IEC 62368-1). Avoid unnecessary prolonged contact with the device to prevent discomfort and if your ARVICOM headset gets uncomfortably warm, remove it and take a break. If the device surfaces is heating above bearable temperatures (>60°C), discontinue use and contact ARVICOM service and support team.

Skin Allergies:

Your ARVICOM headsets are made of commonly used materials in wearable devices. However, some materials may cause allergic reactions in certain individuals. To reduce risk of skin irritation and marks, regularly clean your device, do not use against injured skin and do not overtighten the headband. If you experience severe or persisting symptoms of any discomfort, discontinue use and consult a doctor.

Eye Protection:

ARVICOM headsets and its detachable visor are not intended to provide eye protection against chemicals, UV light, debris and high impacts.

AR Displays Glass:

The AR displays contained in ARVICOM headsets are made of glass, which is susceptible to break upon impact or accidental drops. To reduce the chances of glass damage, it's advisable to maintain the protective visor attached whenever possible and store the device within its protective case when not in use. To reduce the risk of personal injury, avoid touching and wearing a headset with broken, chipped or cracked glass. In such instances, it is strongly advised to stop using the device and send it back to ARVICOM for AR display replacement.

Human exposure to Radio frequency (RF) energy:

This ARVICOM headset utilizes RF technology for wireless communication. To guarantee a safe user exposure to RF power, this equipment has been designed, manufactured and tested to meet the Federal Communications Commission (FCC) and the European directives, the exposure to RF energy. Wear the device on your head as intended and described in User Manual to ensure SAR limits set on the mentioned guidelines are not exceeded, and avoid placing the device in contact with other body parts.

1.2 Reporting of incidents

In case of serious-incidents (harm, injury, etc.) occurred during the use of your equipment, promptly contact ARVICOM service and support team by phone or email.

If you believe the device is broken, disconnect it from the power supply and contact the ARVICOM service and support team. Using broken devices may result in electric shock or fire.

2 Regulatory Information

Regulatory compliance marks can be found marked on the visible plastic surface of your device.

2.1 CE compliance

Manufacturer address:
ARVICOM S.a.r.l.
20 Rue du Commerce
3895 Foetz, Luxembourg
Email: contact@arvicom.eu
Phone: +352 691 722 733

Simplified EU Declaration of Conformity
Hereby, ARVICOM declares that CART and CART S products are compliant with the EU Radio Equipment Directive 2014/53/EU.

EMC Compliance
ARVICOM headsets have demonstrated electromagnetic compatibility (EMC) compliance. It is important that you use compliant peripheral devices and shielded cables between system components to reduce the possibility of causing interference to radios, televisions and other electronic devices.

RF Emission & Exposure
The CART & CART S headsets have been designed and tested to comply with the Radio Equipment Directive (RED) and the Federal Communications Commission (FCC) requirements regarding RF emissions and exposure.

Product	Mode and Frequency bands	Max Power (dBm) EIRP
CART / CART S	WLAN 2412-2472 GHz	12.87
	WLAN 5180-5210 GHz	11.17
	WLAN 5290-5320 GHz	12.10
	WLAN 5610-5700 GHz	7.14
	WLAN 5725-5850 GHz	7.10
	Bluetooth 2402-2480 GHz	2.68
	Bluetooth LT 2402-2480 GHz	0.91

Operation of this device in the band 5150-5250 MHz is restricted to indoor use only in the following countries:
BE, BG, CZ, DK, DE, EE, IE, EL, ES, FR, HR, IT, CY, LV, LT, LU, HU, MT, NL, AT, PL, PT, RO, SI, SK, FI, SE.

This device is restricted to indoor use when operated in 5150 MHz – 5350 MHz to reduce the potential for interference.

The highest value of Specific Absorption Rate (SAR) for all the used frequency bands generated by these product models is: 0.49 W/kg (Head).

To ensure the exposure to RF energy produced by device do not exceed the limits set by the guidelines above, use and position the headset as described in the User Manual of the product.

Waste electrical and electronic equipment (WEEE) directive and battery directive

This WEEE symbol means that the product, packaging or its accessories should not be disposed of with your household waste. If the product or its accessories need to be disposed, please return the devices to the ARVICOM, by contacting the service and support team and following the provided instructions. This dedicated disposal and recycling will help to conserve natural resources and the environment, as well as protect human health.

2.2 FCC compliance

This device complies with part 15 of the FCC Rules. Operation is subject to the following two conditions:

1. This device may not cause harmful interference, and
2. this device must accept any interference received, including interference that may cause undesired operation.

This equipment has been tested and found to comply with the limits for a Class B digital device, pursuant to part 15 of the FCC Rules. These limits are designed to provide reasonable protection against harmful interference in a residential installation. This equipment generates, uses and can radiate radio frequency energy and, if not installed and used in accordance with the instructions, may cause harmful interference to radio communications. However, there is no guarantee that interference will not occur in a particular installation. If this equipment does cause harmful interference to

radio or television reception, which can be determined by turning the equipment off and on, the user is encouraged to try to correct the interference by one or more of the following measures:

- Reorient or relocate the receiving antenna.
- Increase the separation between the equipment and receiver.
- Connect the equipment into an outlet on a circuit different from that to which the receiver is connected.
- Consult the dealer or an experienced radio/TV technician for help.

Caution: Any changes or modifications to this device not explicitly approved by manufacturer could void your authority to operate this equipment.

5G WiFi statement

This device is restricted to indoor use when operated in 5150 MHz – 5350 MHz to reduce the potential for interference.

RF exposure

The SAR limit adopted by FC is 1.6W/kg averaged over 1g of tissue. The device model 900.0025.01 (FCC-ID: 2GBNU-CART) has also been tested with 0mm against this SAR limit. The highest SAR value reported to the FCC of this device complies with this limit.

3 Product warranty summary

The complete description of warranty services and conditions of your product can be consulted in the supply agreement provided by ARVICOM, which always prevails over the warranty conditions below.

Warranty information:

1. This warranty applies to the direct purchaser of ARVICOM products and is non-transferable.
2. ARVICOM warrants that your product will be free from defects in materials and workmanship during the warranty period. The warranty includes the repair or replacement of any defective hardware and software component, except if the cause of the defect falls within the list given in point 4.
3. Your product is covered by warranty during a period of 12 months starting from the date of delivery at the direct purchaser's address. This warranty period can be extended according to specific purchaser needs, and are detailed in the supply agreement.
4. To maintain the warranty, please follow the recommended maintenance and operating instructions outlined in the User Manual. Use only authorized accessories and components. This warranty does not cover:
   - Damage resulting from misuse, neglect, or unauthorized modifications or repairs.
   - Normal wear and tear, including in the consumable parts and accessories.
   - Damage caused by accidents, natural disasters, or environmental factors.

5. If you believe your equipment is covered by the warranty, please contact ARVICOM service and support team. They will guide you through the warranty claim process, which may include sharing failure evidences and returning the device for evaluation. When returning any device, please follow the guidelines below:
   - Disconnect and turn off the device(s)
   - Clean the device(s) (instructions detailed in User Manual)
   - Use the original packaging
   - Include a packing slip
   - Write the RMA number provided by ARVICOM for parcel identification
   - Returning Address:

     ARVICOM S.a.r.l.
     20 Rue du Commerce
     3895 Foetz, Luxembourg

6. After failure assessment, ARVICOM will determine whether the warranty conditions are fulfilled and proceed to the repairing actions or replacement of the defective device accordingly. ARVICOM can charge the repairing actions when the failure does not fall inside the warranty conditions. In these circumstances, the client will be informed of the repairing costs and ARVICOM will proceed to the repairing or replacement of the defective device only after a confirmation by the client. Repaired or replaced devices will be covered by the same warranty conditions, throughout the remaining warranty period.

7. This warranty is a voluntary manufacturer's warranty that provides specific contractual rights additional to the rights provided by the law, and jurisdiction of the courts of the country of the direct purchaser.