SodaRide

Wireless Charging Car Cup Holder Expander Tray

Manual

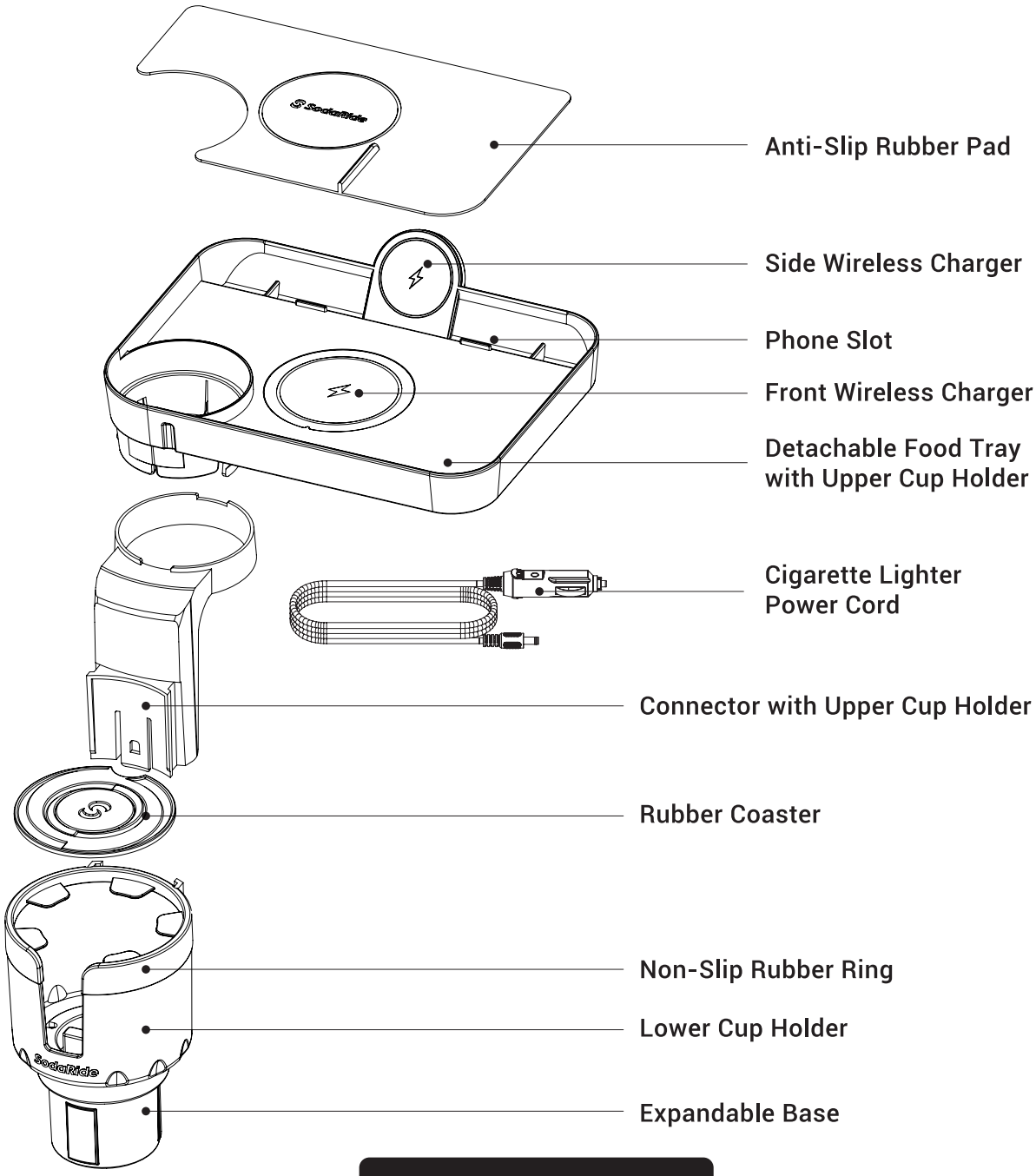

DIMENSIONS

Upper Cup Holder : 3" diameter wide normal cup holder
Lower Cup Holder : 4" diameter wide normal cup holder
Expandable Base: Expands from 2.6"-3.9"
Attachable Tray : 10.2"×7.4"×0.8"
Power Cord : 47"

6 Pieces

Warnings & Cautions

1. Please make sure your OEM cup holder is **round in shape, diameter is between 2.6"-3.9". SodaRide cup holder expander tray is not applicable in the below situation:**

× Too close to the central dashboard/shift knob.
× The raised edge obstructs the cup holder.
× The board obstructs the cup holder.
× Cup holder with Oval/square/semicircle/irregular shape.

2. The load of the tray is limited, less than 4kg.
3. Keep away from children and pets. Mishandling may cause injury.
4. For optimal charging efficiency, remove the Anti-Slip Rubber Pad if cell phone case is thick.

Cup Holder Installation

Step1

Place the cup holder expander into the OEM cup holder. Ensure that all three legs are on the inner wall of the cup holder, and no leg is stuck at the notch.

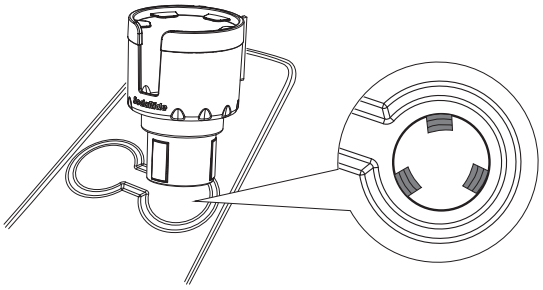

Step2

Press the two buttons and turn it clockwise until the base is securely fixed.

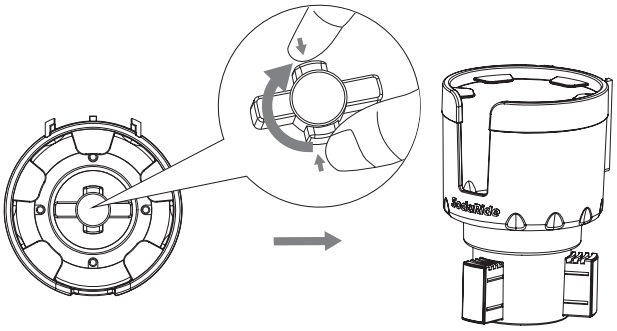

Cup Holder Disassembly

Step1

Press the two buttons and turn it anti-clockwise to retract the 3 feet.

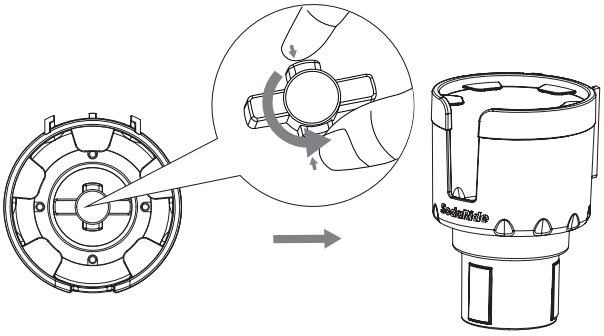

Tray Installation

Step 1

Install the food tray onto the connector.

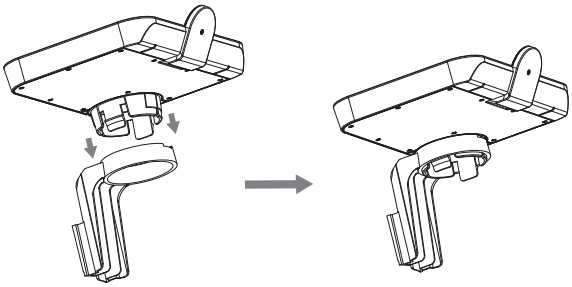

Step 2

Slide the connector on the cup holder until it clicks.

360° Rotating Tray

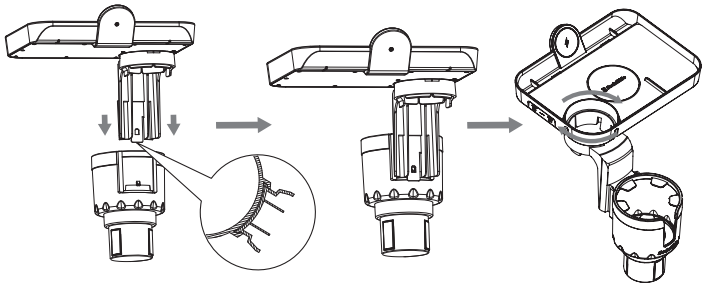

Tray Disassembly

Step1

Press the 2 locks towards the center and push the tray out of the connector.

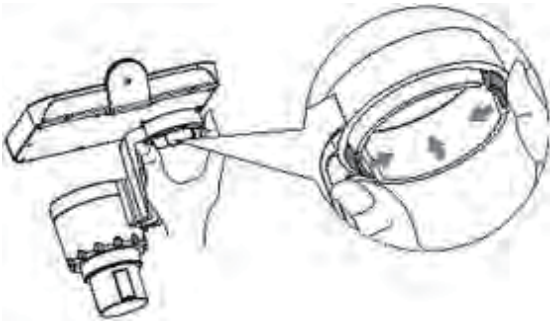

Step2

Lift the plastic lock and slide upwards.
Please hold the other end and slide it slowly.

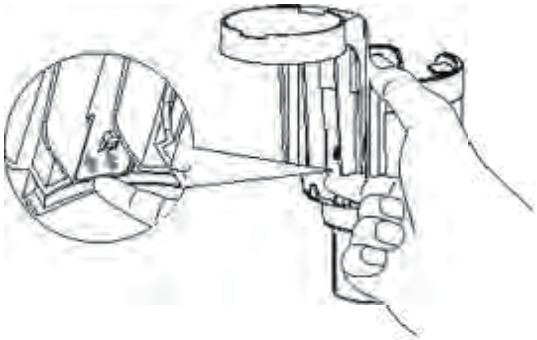

Wireless Charger Usage Diagram

Dual Wireless Charger 30W TOTAL MAX

Support Apple and Android wireless charging protocol.
Charging power varies according to phone models, Apple 7.5W/5W,Android 15W/10W.

12V 4A MAX Power Cord

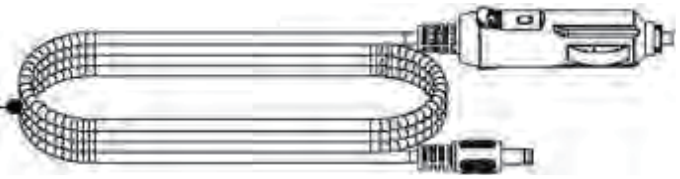

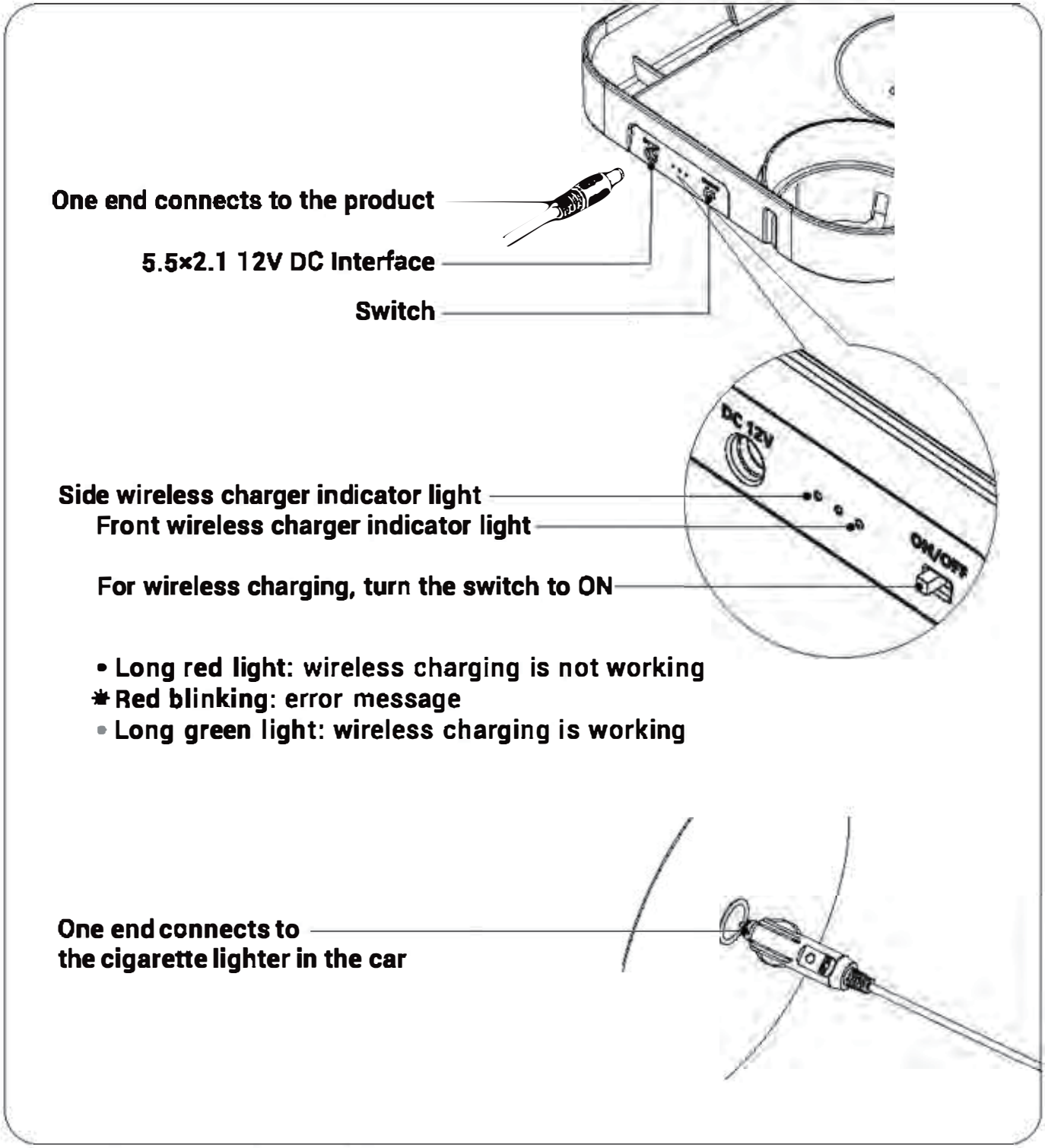
One end connects to the product
5.5×2.1 12V DC Interface
Switch
DC 12V
ON/OFF
Side wireless charger indicator light
Front wireless charger indicator light
For wireless charging, turn the switch to ON
• Long red light: wireless charging is not working
Red blinking: error message
• Long green light: wireless charging is working
One end connects to
the cigarette lighter in the car

Valid Place

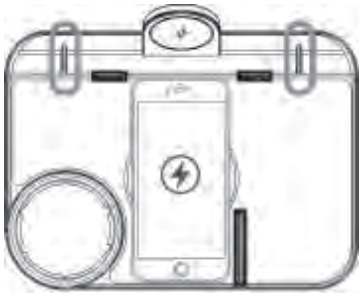

Front Place

Side Place

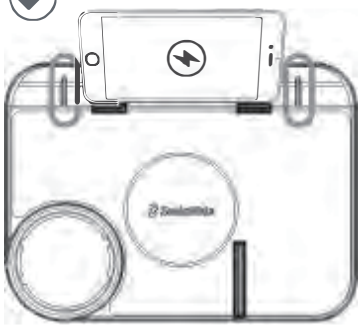

When using the front/side wireless charging function,please place the phone in the effective charging area (the area protected by the Baffle) .

Invalid Place

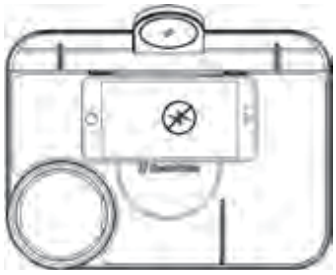

Horizontal Place

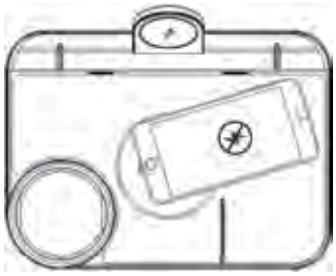

Slope Place

Warranty & Disclaimer

We want you to be 100% confident in your purchase and thus offering a One Year Warranty for this product. However, SodaRide is not liable for any consequential damages arising from the improper use or installation of the product. If the product is installed in a non-specified manner, SodaRide reserves the right to reject any warranty claim at the discretion of the technical support department.

SodaRide *SPARKLE YOUR JOURNEY*

www.sodaride.com Contact us: info@sodaride.com

Watch Our Installation Video

www.sodaride.com/pages/video

@sodaride_official

TikTok YouTube

@SodaRideOfficial

FCC Statement

This equipment has been tested and found to comply with the limits for a Class B digital device, pursuant to part 15 of the FCC Rules. These limits are designed to provide reasonable protection against harmful interference in a residential installation. This equipment generates, uses and can radiate radio frequency energy and, if not installed and used in accordance with the instructions, may cause harmful interference to radio communications. However, there is no guarantee that interference will not occur in a particular installation. If this equipment does cause harmful interference to radio or television reception, which can be determined by turning the equipment off and on, the user is encouraged to try to correct the interference by one or more of the following measures:

- Reorient or relocate the receiving antenna.
- Increase the separation between the equipment and receiver.
- Connect the equipment into an outlet on a circuit different from that to which the receiver is connected.
- Consult the dealer or an experienced radio/TV technician for help.

Caution: Any changes or modifications to this device not explicitly approved by manufacturer could void your authority to operate this equipment.

This device complies with part 15 of the FCC Rules. Operation is subject to the following two conditions: (1) This device may not cause harmful interference, and (2) this device must accept any interference received, including interference that may cause undesired operation.

RF Exposure Information

This equipment complies with FCC radiation exposure limits set forth for an uncontrolled environment. This equipment should be installed and operated with minimum distance 20cm between the radiator and your body.