TEST REPORT

For

Shenzhen Ruyudeshui Intelligent Co., Ltd
Product Name: Head-Up Display
Test Model(s).: V12

Report Reference No.	:	**DACE240808001RF001**
FCC ID	:	**2BGQO-V12**
Applicant's Name	:	Shenzhen Ruyudeshui Intelligent Co., Ltd
Address	:	6B6, Building 2,Xunyuan Zhichuang Valley, Fuhong Industrial Zone, Fengtang Avenue, Tangwei Community, Fuhai Street,Baoan District, Shenzhen, Guangdong, China
Testing Laboratory	:	Shenzhen DACE Testing Technology Co., Ltd.
Address	:	102, Building H1, & 1/F., Building H, Hongfa Science & Technology Park, Tangtou Connunity, Shiyan Subdistrict, Bao'an District, Shenzhen, Guangdong, China
Test Specification Standard	:	**47 CFR Part 15, Subpart B**
Date of Receipt	:	August 8, 2024
Date of Test	:	August 8, 2024 to August 12, 2024
Data of Issue	:	August 13, 2024
Result	:	**Pass**

Note: This report shall not be reproduced except in full, without the written approval of Shenzhen DACE Testing Technology Co., Ltd. This document may be altered or revised by Shenzhen DACE Testing Technology Co., Ltd. personnel only, and shall be noted in the revision section of the document. The test results in the report only apply to the tested sample

Revision History Of Report

Version	Description	REPORT No.	Issue Date
V1.0	Original	DACE240808001RF001	August 13, 2024

NOTE1:

The manufacturer should ensure that all products in series production are in conformity with the product sample detailed in this report. If the product in this report is used in any configuration other than that detailed in the report, the manufacturer must ensure the new system complies with all relevant standards.

Keren Huang	Stone Yin	Tom Chen
Keren Huang / Test Engineer	Stone Yin / Project Engineer	Tom Chen / Manager

CONTENTS

1 TEST SUMMARY 4
1.1 TEST STANDARDS 4
1.2 SUMMARY OF TEST RESULT 4
2 GENERAL INFORMATION 5
2.1 CLIENT INFORMATION 5
2.2 DESCRIPTION OF DEVICE (EUT)* 5
2.3 DESCRIPTION OF TEST MODES 5
2.4 DESCRIPTION OF SUPPORT UNITS 5
2.5 EQUIPMENTS USED DURING THE TEST 6
2.6 STATEMENT OF THE MEASUREMENT UNCERTAINTY 7
2.7 IDENTIFICATION OF TESTING LABORATORY 7
2.8 ANNOUNCEMENT 7
3 EMISSION TEST RESULTS (EMI) 8
3.1 CONDUCTED EMISSIONS ON AC MAINS 8
3.1.1 E.U.T. Operation: 8
3.1.2 Test Setup Diagram: 8
3.1.3 Test Data: 9
3.2 RADIATED EMISSIONS (BELOW 1GHZ) 11
3.2.1 E.U.T. Operation: 11
3.2.2 Test Setup Diagram: 11
3.2.3 Test Data: 12
4 TEST SETUP PHOTOS 14
5 PHOTOS OF THE EUT 15

1 TEST SUMMARY

1.1 Test Standards

The tests were performed according to following standards:

47 CFR Part 15, Subpart B: Unintentional Radiators

1.2 Summary of Test Result

Item	Standard	Method	Requirement	Result
Conducted emissions on AC mains	47 CFR Part 15, Subpart B	ANSI C63.4-2014	15.107, Class B	Pass
Radiated emissions (Below 1GHz)	47 CFR Part 15, Subpart B	ANSI C63.4-2014	15.109, Class B	Pass

2 GENERAL INFORMATION

2.1 Client Information

Applicant's Name : Shenzhen Ruyudeshui Intelligent Co., Ltd

Address : 6B6, Building 2,Xunyuan Zhichuang Valley, Fuhong Industrial Zone, Fengtang Avenue, Tangwei Community, Fuhai Street,Baoan District, Shenzhen, Guangdong, China

Manufacturer : Shenzhen Ruyudeshui Intelligent Co., Ltd

Address : 6B6, Building 2,Xunyuan Zhichuang Valley, Fuhong Industrial Zone, Fengtang Avenue, Tangwei Community, Fuhai Street,Baoan District, Shenzhen, Guangdong, China

2.2 Description of Device (EUT)*

Product Name:	Head-Up Display
Sample No:	Q240801007-1
Model/Type reference:	V12
Serial Model:	Y03, Y05, Y06, V1, V2, V3, V5, V6, V7, V8, V9, V10
Model difference:	There are many series and models of products, and the only difference between models is the naming (which may vary for different customers). These differences will not affect the EMC performance of the product, so the main testing model is V12.
Trade Mark:	N/A
Product Description:	Head-Up Display
Power Supply:	DC5.0V from Type-C port
Hardware Version:	V1.0
Software Version:	V1.0
Highest Internal Frequency:	1.705-108MHz
Classification of Equipment:	Class B

Note:The GPS function of the product is for receiving signals, not for transmitting.

2.3 Description of Test Modes

No	Title	Description
TM1	Normal working mode	After supplying DC5.0V to the sample, the product operates in normal mode

2.4 Description of Support Units

Title	Manufacturer	Model No.	Serial No.
Adapter	HUAWEI	HW-100400C01	/

2.5 Equipments Used During The Test

Conducted emissions on AC mains					
Equipment	**Manufacturer**	**Model No**	**Inventory No**	**Cal Date**	**Cal Due Date**
Cable	SCHWARZ BECK	/	/	2024-03-20	2025-03-19
Pulse Limiter	SCHWARZ BECK	VTSD 9561-F Pulse limiter	561-G071	2023-12-12	2024-12-11
50ΩCoaxial Switch	Anritsu	MP59B	M20531	/	/
Test Receiver	Rohde & Schwarz	ESPI TEST RECEIVER	1164.6607K03 -102109-MH	2024-06-12	2025-06-11
L.I.S.N	R&S	ESH3-Z5	831.5518.52	2023-12-12	2024-12-11
L.I.S.N	SCHWARZ BECK	NSLK 8126	05055	2024-06-14	2025-06-13
Pulse Limiter	CYBERTEK	EM5010A	/	2023-09-27	2024-09-26
EMI test software	EZ -EMC	EZ	V1.1.42	/	/

Radiated emissions (Below 1GHz)					
Equipment	**Manufacturer**	**Model No**	**Inventory No**	**Cal Date**	**Cal Due Date**
Cable(HF)2	SCHWARZ BECK	50Ω	/	2024-03-20	2025-03-19
Cable(HF)1	SCHWARZ BECK	50Ω	/	2024-03-20	2025-03-19
Cable(LF)2	SCHWARZ BECK	50Ω	/	2024-03-20	2025-03-19
Cable(LF)1	SCHWARZ BECK	50Ω	/	2024-03-20	2025-03-19
Control	Positioning Controller	Model MF-7802	MF780208362	2023-12-27	2024-12-26
Test Receiver	Rohde & Schwarz	ESPI TEST RECEIVER	ID:1164.6607K 03-102109-MH	2024-06-12	2025-06-11
EMI Test software	Farad	EZ -EMC	V1.1.42	/	/
Positioning Controller	/	MF-7802	/	/	/
Loop antenna	ZHINAN	ZN30900C	ZN30900C	2024-06-14	2026-06-13
Power amplifier(LF)	Schwarzbeck	BBV9743	9743-151	2024-06-12	2025-06-11
Power amplifier(HF)	Schwarzbeck	BBV9718	9718-282	2024-06-12	2025-06-11
Horn Antenna	Sunol Sciences	DRH-118	A091114	2023-05-13	2025-05-12
Broadband Antenna	Sunol Sciences	JB6 Antenna	A090414	2023-05-21	2025-05-20

2.6 Statement Of The Measurement Uncertainty

Test Item	Measurement Uncertainty
Conducted Disturbance (0.15~30MHz)	±2.72dB
Radiated Emission (Below 1GHz)	±5.79dB
Note: (1) This uncertainty represents an expanded uncertainty expressed at approximately the 95% confidence level using a coverage factor of k=2.	

2.7 Identification of Testing Laboratory

Company Name:	Shenzhen DACE Testing Technology Co., Ltd.
Address:	102, Building H1, & 1/F., Building H, Hongfa Science & Technology Park, Tangtou, Shiyan, Bao'an District, Shenzhen, Guangdong, China
Phone Number:	+86-13267178997
Fax Number:	86-755-29113252

Identification of the Responsible Testing Location

Company Name:	Shenzhen DACE Testing Technology Co., Ltd.
Address:	102, Building H1, & 1/F., Building H, Hongfa Science & Technology Park, Tangtou, Shiyan, Bao'an District, Shenzhen, Guangdong, China
Phone Number:	+86-13267178997
Fax Number:	86-755-29113252
FCC Registration Number:	0032847402
Designation Number:	CN1342
Test Firm Registration No.:	778666
A2LA Certificate Number:	6270.01

2.8 Announcement

(1) The test report reference to the report template version v0.

(2) The test report is invalid if not marked with the signatures of the persons responsible for preparing, reviewing and approving the test report.

(3) The test report is invalid if there is any evidence and/or falsification.

(4) This document may not be altered or revised in any way unless done so by DACE and all revisions are duly noted in the revisions section.

(5) Content of the test report, in part or in full, cannot be used for publicity and/or promotional purposes without prior written approval from the laboratory.

(6) We hereby declare that the laboratory is only responsible for the data released by the laboratory, except for the part provided by the applicant(information with "*" provided by applicant). the laboratory is not responsible for the accuracy of the information provided by the client. When the information provided by the customer may affect the effectiveness of the results, the responsibility lies with the customer, and the laboratory does not assume any responsibility.

3 Emission Test Results (EMI)

3.1 Conducted emissions on AC mains

Test Requirement:	15.107, Class B
Test Limit:	

Frequency of emission (MHz)	Conducted limit (dBμV)	
	Quasi-peak	Average
0.15-0.5	66 to 56*	56 to 46*
0.5-5	56	46
5-30	60	50
*Decreases with the logarithm of the frequency.		

Test Method:	ANSI C63.4-2014
Procedure:	An initial pre-scan was performed with peak detector.Quasi-Peak or Average measurement were performed at the frequencies with maximized peak emission were detected. Remark: Level= Read Level+ Cable Loss+ LISN Factor

3.1.1 E.U.T. Operation:

Operating Environment:					
Temperature:	22.7 °C	Humidity:	54 %	Atmospheric Pressure:	102 kPa
Pretest mode:	TM1				
Final test mode:	TM1				

3.1.2 Test Setup Diagram:

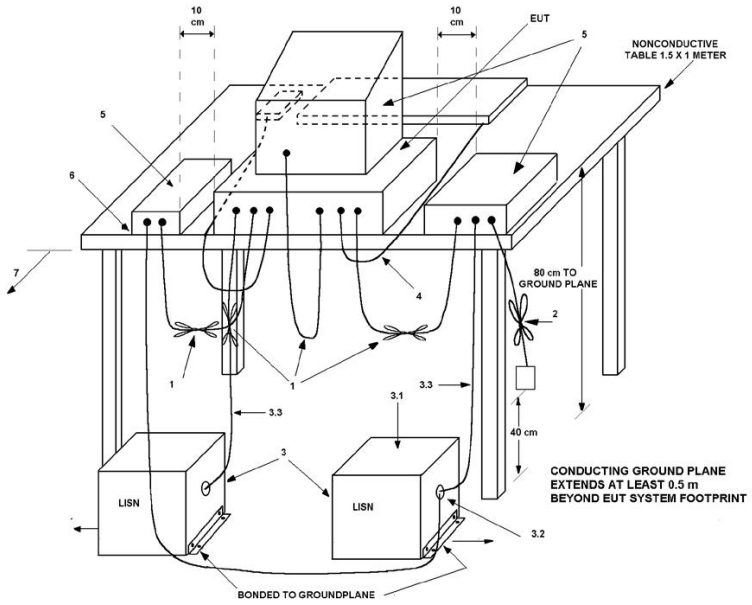

3.1.3 Test Data:

TM1 / Line: Neutral

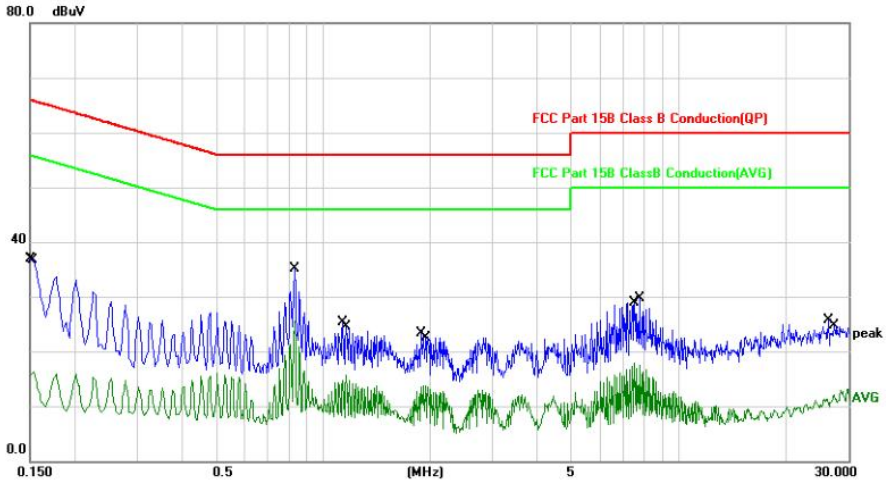

No.	Mk.	Freq.	Reading Level	Correct Factor	Measure-ment	Limit	Over		
		MHz	dBuV	dB	dBuV	dBuV	dB	Detector	Comment
1		0.1500	26.77	10.10	36.87	65.99	-29.12	QP	
2		0.1539	6.17	10.10	16.27	55.78	-39.51	AVG	
3		0.8340	25.05	10.08	35.13	56.00	-20.87	QP	
4	*	0.8340	15.34	10.08	25.42	46.00	-20.58	AVG	
5		1.1380	15.27	10.07	25.34	56.00	-30.66	QP	
6		1.1620	5.56	10.07	15.63	46.00	-30.37	AVG	
7		1.8940	13.31	10.00	23.31	56.00	-32.69	QP	
8		1.9420	3.71	10.00	13.71	46.00	-32.29	AVG	
9		7.5140	7.64	10.24	17.88	50.00	-32.12	AVG	
10		7.7460	19.36	10.26	29.62	60.00	-30.38	QP	
11		26.3060	14.80	10.91	25.71	60.00	-34.29	QP	
12		27.3340	1.10	10.97	12.07	50.00	-37.93	AVG	

TM1 / Line: Line

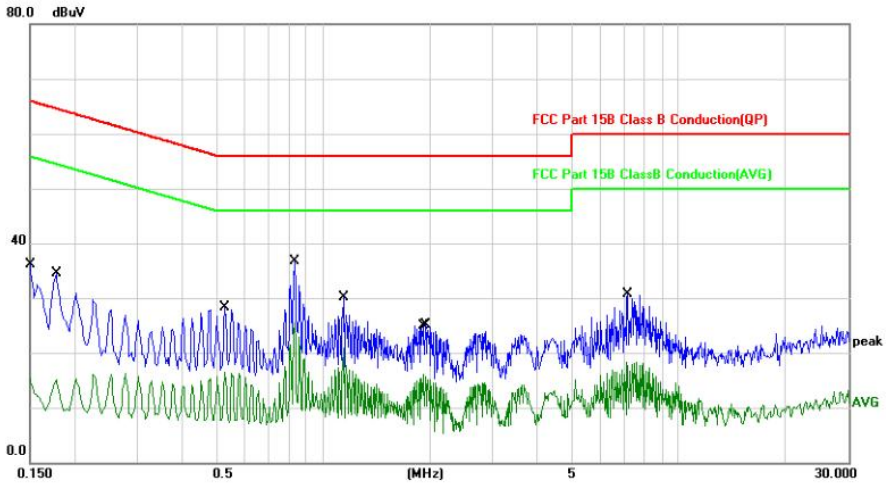

No.	Mk.	Freq.	Reading Level	Correct Factor	Measure-ment	Limit	Over		
		MHz	dBuV	dB	dBuV	dBuV	dB	Detector	Comment
1		0.1500	5.15	10.10	15.25	55.99	-40.74	AVG	
2		0.1780	24.44	10.10	34.54	64.57	-30.03	QP	
3		0.5299	18.24	10.08	28.32	56.00	-27.68	QP	
4		0.5299	6.33	10.08	16.41	46.00	-29.59	AVG	
5	*	0.8340	26.64	10.08	36.72	56.00	-19.28	QP	
6		0.8340	15.41	10.08	25.49	46.00	-20.51	AVG	
7		1.1420	20.07	10.07	30.14	56.00	-25.86	QP	
8		1.1420	10.81	10.07	20.88	46.00	-25.12	AVG	
9		1.9180	6.10	10.00	16.10	46.00	-29.90	AVG	
10		1.9460	15.03	10.00	25.03	56.00	-30.97	QP	
11		7.1740	8.16	10.23	18.39	50.00	-31.61	AVG	
12		7.1780	20.38	10.23	30.61	60.00	-29.39	QP	

3.2 Radiated emissions (Below 1GHz)

Test Requirement:	15.109, Class B
Test Limit:	Except for Class A digital devices, the field strength of radiated emissions from unintentional radiators at a distance of 3 meters shall not exceed the following values:

Frequency of emission (MHz)	Field strength @3m		Field strength @10m	
	(uV/m)	(dBuV/m)	(uV/m)	(dBuV/m)
30 – 88	100	40	30	29.5
88 – 216	150	43.5	45	33.1
216 – 960	200	46	60	35.6
Above 960	500	54	150	43.5

Test Method:	ANSI C63.4-2014
Procedure:	An initial pre-scan was performed in the chamber using the spectrum analyser in peak detection mode. Quasi-peak measurements were conducted based on the peak sweep graph. The EUT was measured by BiConiLog antenna with 2 orthogonal polarities. Remark: Level= Read Level+ Cable Loss+ Antenna Factor- Preamp Factor

3.2.1 E.U.T. Operation:

Operating Environment:					
Temperature:	22.7 °C	Humidity:	54 %	Atmospheric Pressure:	102 kPa
Pretest mode:	TM1				
Final test mode:	TM1				

3.2.2 Test Setup Diagram:

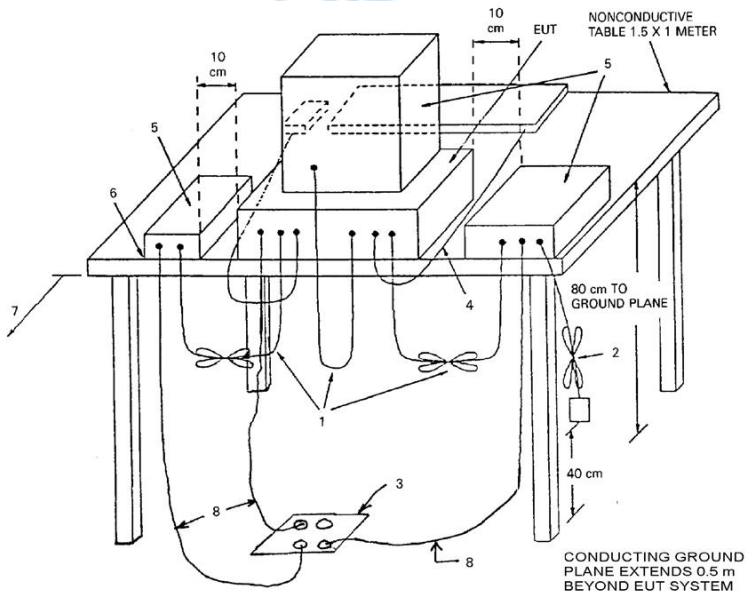

3.2.3 Test Data:

TM1 / Polarization: Horizontal

No.	Frequency (MHz)	Reading (dBuV)	Factor (dB/m)	Level (dBuV/m)	Limit (dBuV/m)	Margin (dB)	Detector	Height (cm)	Azimuth (deg.)	P/F	Remark
1 *	30.2111	25.90	0.11	26.01	40.00	-13.99	QP	100		P	
2	53.3179	32.85	-13.50	19.35	40.00	-20.65	QP	100		P	
3	145.8611	34.73	-8.04	26.69	43.50	-16.81	QP	100		P	
4	210.0482	34.52	-8.59	25.93	43.50	-17.57	QP	100		P	
5	267.5455	34.79	-6.78	28.01	46.00	-17.99	QP	100		P	
6	315.4808	36.78	-5.90	30.88	46.00	-15.12	QP	100		P	

TM1 / Polarization: Vertical

No.	Frequency (MHz)	Reading (dBuV)	Factor (dB/m)	Level (dBuV/m)	Limit (dBuV/m)	Margin (dB)	Detector	Height (cm)	Azimuth (deg.)	P/F	Remark
1	43.2017	42.62	-9.08	33.54	40.00	-6.46	QP	100		P	
2 !	53.5052	47.87	-13.65	34.22	40.00	-5.78	QP	100		P	
3 *	87.4177	48.68	-13.89	34.79	40.00	-5.21	QP	100		P	
4	146.3735	43.46	-8.23	35.23	43.50	-8.27	QP	100		P	
5	169.5990	37.62	-8.70	28.92	43.50	-14.58	QP	100		P	
6	413.2706	33.40	-3.15	30.25	46.00	-15.75	QP	100		P	

1. Margin = Measurement Level - Limit ; Measurement Level=Test receiver reading + correction factor
2.The test software will only record the worst test angle and height, and only the worst case will be recorded in the test report.

4 TEST SETUP PHOTOS

Conducted emissions on AC mains

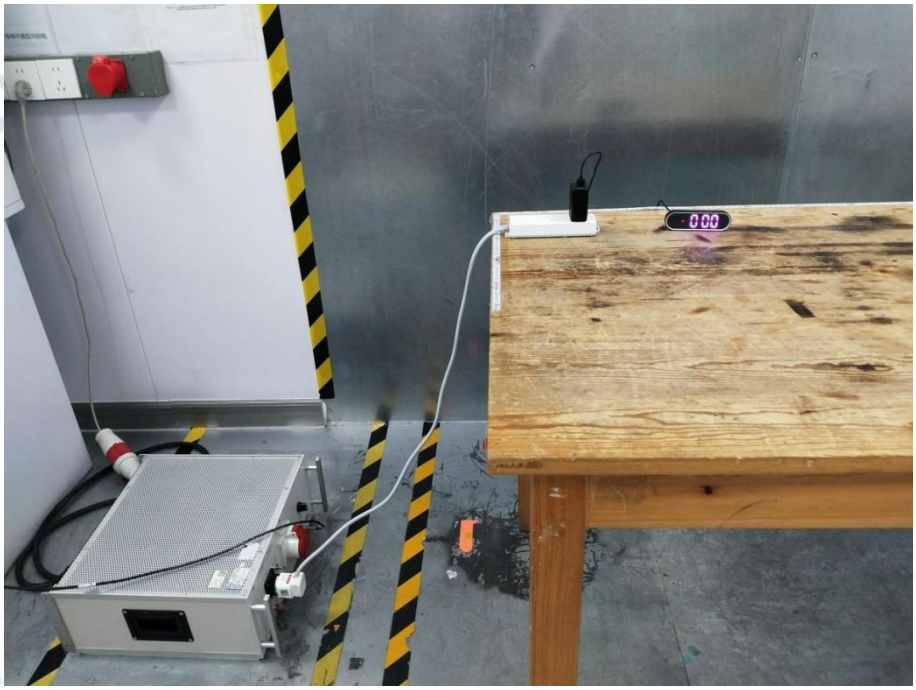

Radiated emissions (Below 1GHz)

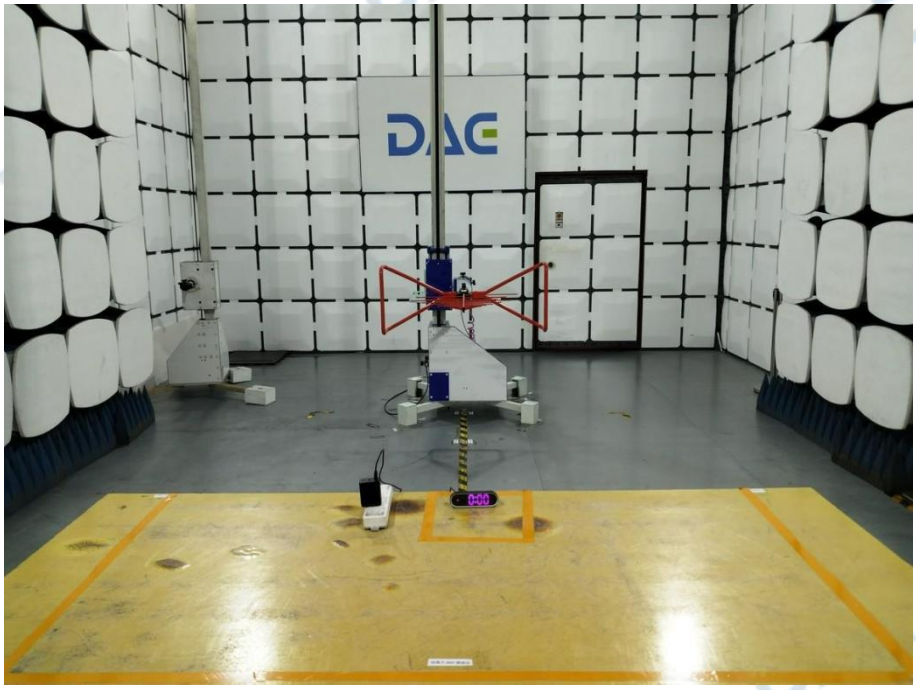

5 PHOTOS OF THE EUT

External

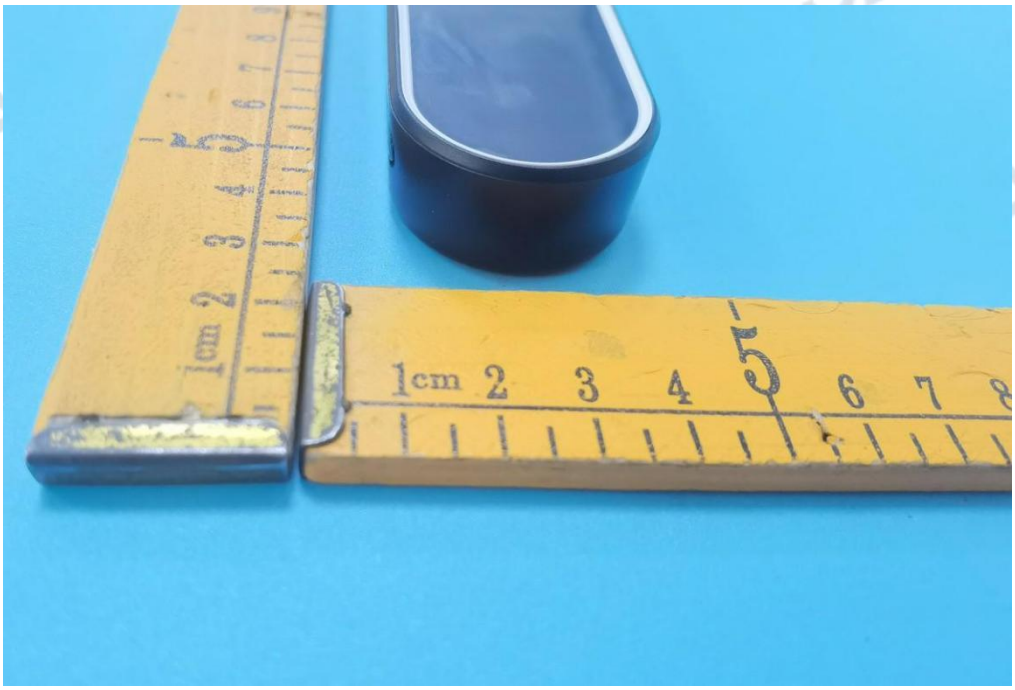

Internal

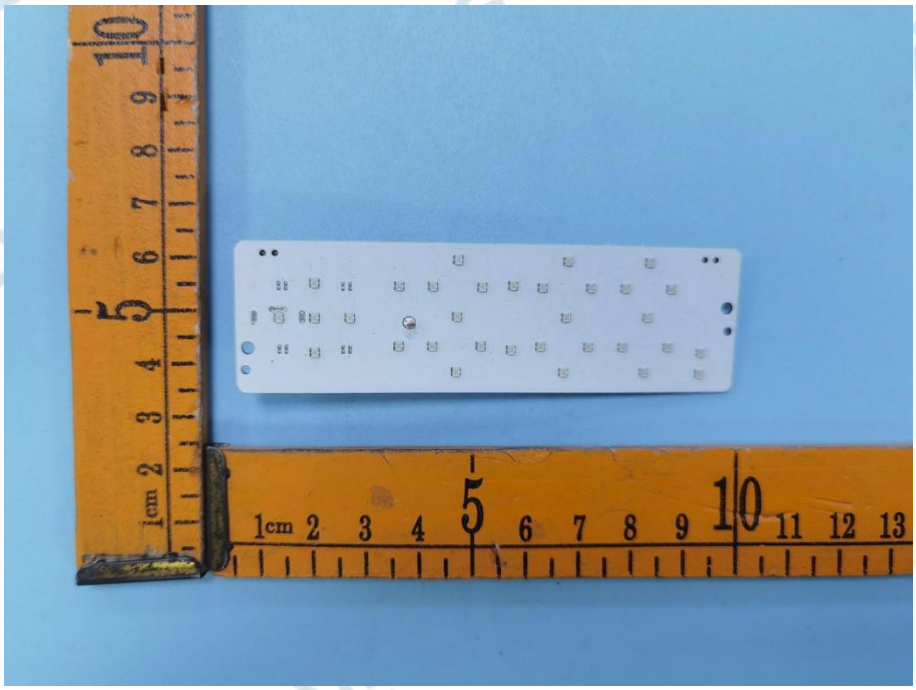

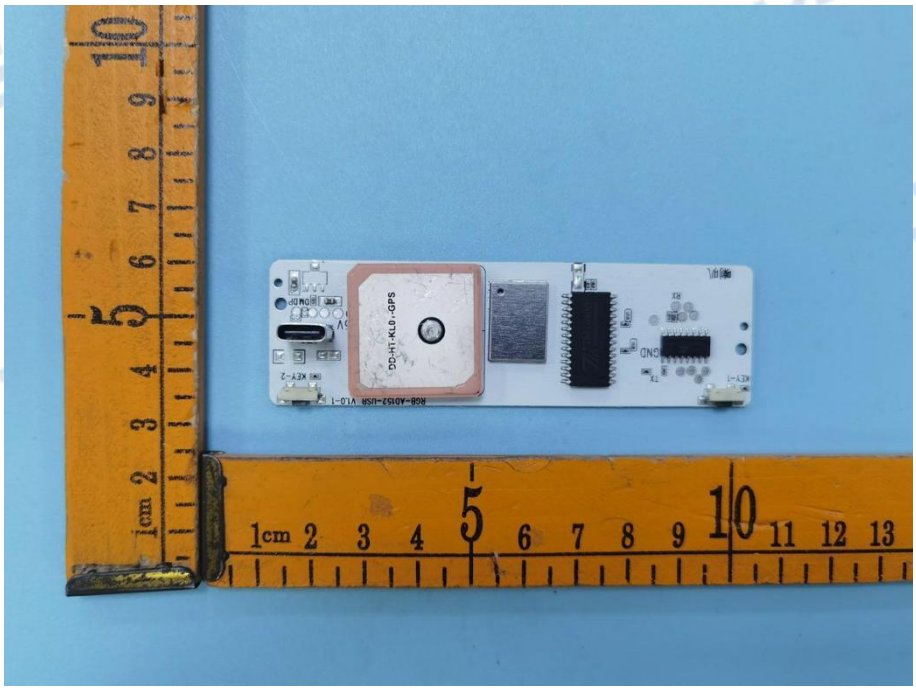

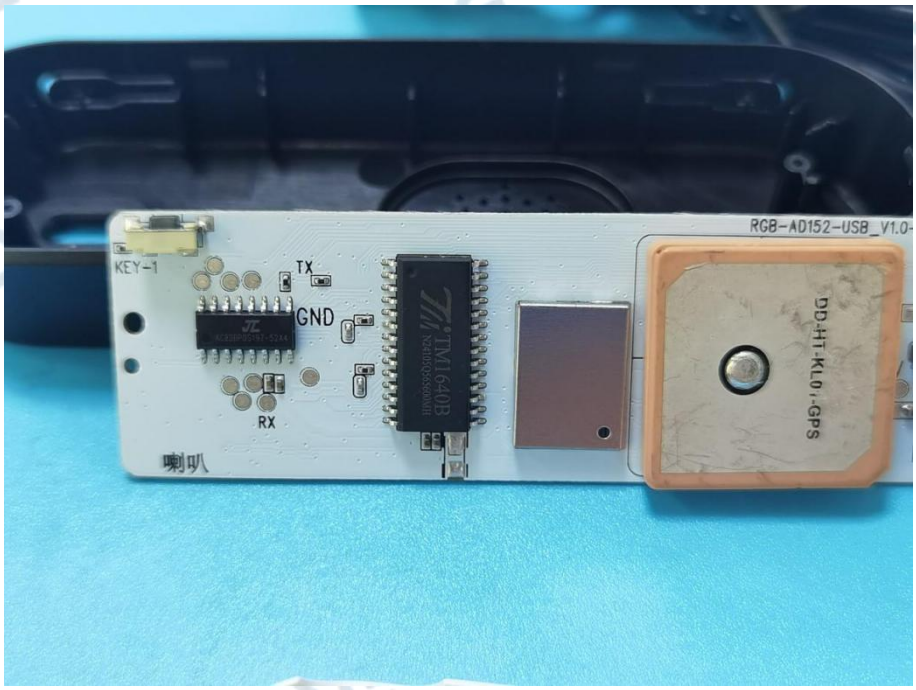

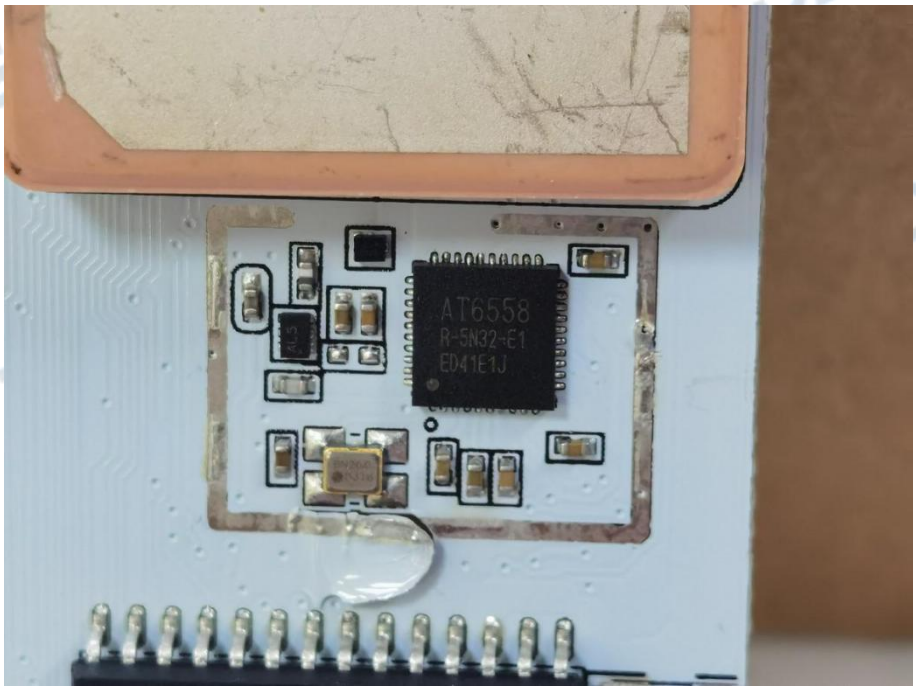

********** **End of Report** **********