15.6-inch
all-in-one touch
POS

USER MANUAL

USER
MANUAL

User
Manual /

Contents

Section 1 | **Introduction** ..... Page / 03

Section 2 | **Installation** ..... Page / 07

Section 3 | **Operation** ..... Page / 08

Section 4 | **Optional Upgrades** ..... Page / 09

Section 5 | **Technical Support** ..... Page / 10

Section 6 | **Maintenance and Safety** ..... Page / 11

Section 1 /

Introduction

Product Description

As your loyal and reliable software supplier, POS has always been committed to how to provide customers with integrated services. The 15.6-inch all-in-one touch POS realized our long-cherished wish, which combines modern aesthetics and high-end quality guaranteed by modern craftsmanship. The water-proof and dust-proof function of the touch screen provides a safer operating experience. Through various interfaces, POS is capable of connecting with different accessories. From traditional POS to self-service machine applications, POS provides the durability required for continuous public use and products are supported by a standard 3-year warranty (except LCD panel for 1 year).

Precaution

Follow all warnings, precautions and maintenance tips recommended in this user manual is designed to maximize the life of the equipment and prevent user safety risks. For more information on safety, see Chapter 6. This manual contains important information for the correct solutions to common problems and maintenance of the POS terminal. Before setting up and powering your device, please read this manual carefully.

Product Layout

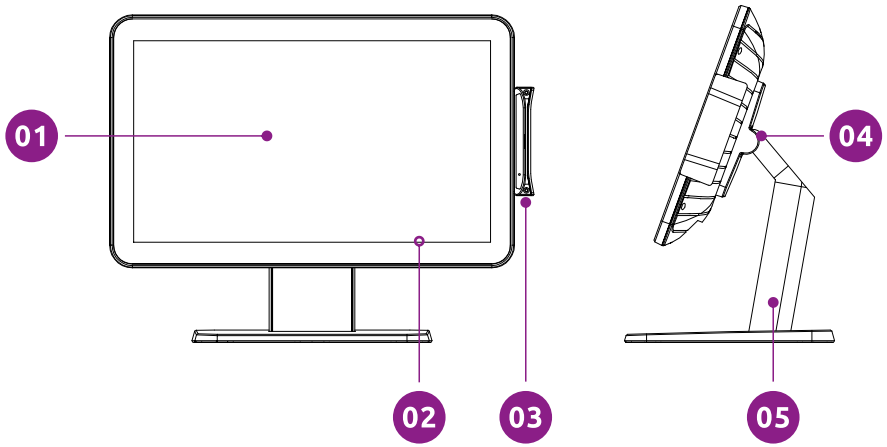

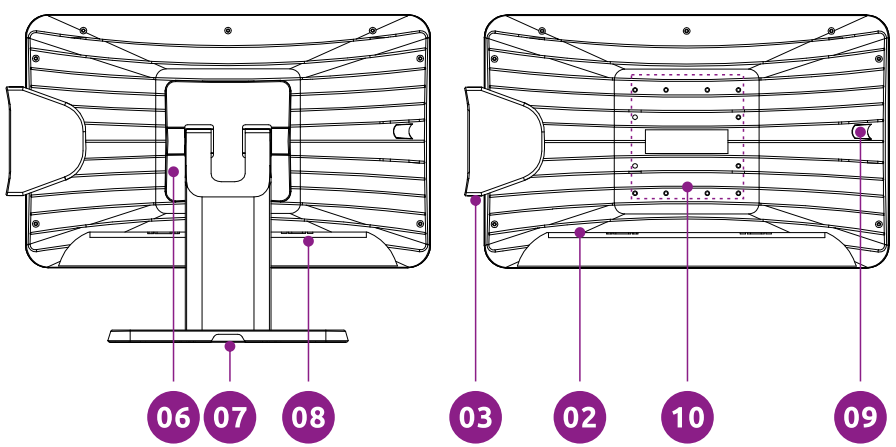

01 Touch&Display
Projected capacitive touch screen with zero-bezel. Support 10-point touch.

02 Power Button
Press the power button to turn on/off the machine.

03 MSR (Card Reader)
Sensitive identification, convenient transaction.

04 Angle Adjustment
Adjust to a more user-friendly angle.

05 Stand
Connect with the host to make the product firmly stand on the desktop.

06 Back Cover
Hide the screw holes, increase product aesthetics.

07 Hidden-cable Hole
Considerate hidden-cable design, the cable is arranged into the hidden line hole, makeing the desktop cleaner.

08 Interface
Connect power supply and accessories.

09 Accessories Installation Hole
Support installing MSR or Fingerprint Reader.

10 VESA Mount
Size: 100mm*100mm, for mounting holes of stand and wall mount.

Android

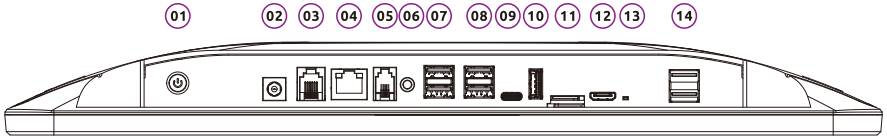

01	POWER BUTTON	02	DC_IN
03	RJ11	04	RJ45
05	RJ11-RS232	06	AUDIO
07	USB 2.0 ×2	08	USB 2.0 ×2
09	USB TYPE-C	10	USB3.0
11	TF CARD	12	MINI-HDMI
13	RECOVER	14	USB 2.0 ×2

POWER BUTTON

Press the power button to turn on/off the machine

DC_IN

Regular power import

RJ11

Registered Jack-11

RJ45

Network port in standard configuration

RJ11-RS232

Serial communication transmission of data

AUDIO

Connect to earphones or stereo

USB 2.0 / USB 3.0

Standard USB ports are available on the input/output panel

USB TYPE-C

24-pin USB connector system with a rotationally symmetrical connector

TF CARD

Storage card import

MINI-HDMI

High definition multimedia interface

RECOVER

Recovery button

Section 2 / Installation

Unpacking the POS terminal

Open the package and make sure all of the following items are presented:

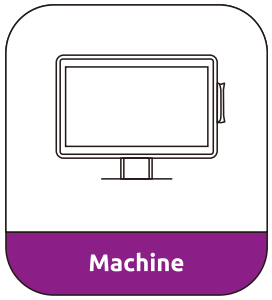

Machine

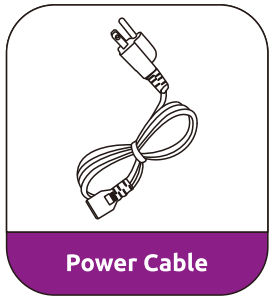

Power Cable

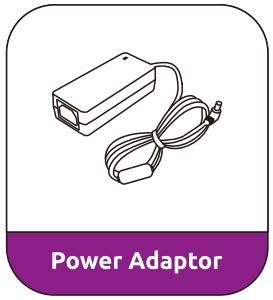

Power Adaptor

Adjusting the Display to a Suitable Position

The POS terminal products could be adjusted to different angles to satisfy the operators. The flat adjustment is showed below.

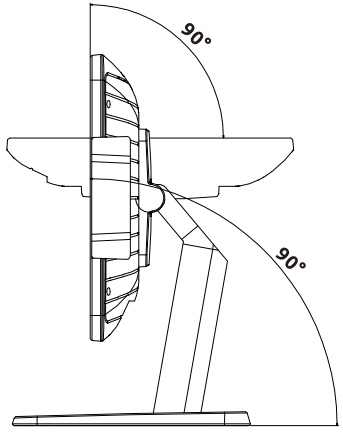

Section 3 /
Operation

General information

This part presents the operation of PLUM POS.

Power Button

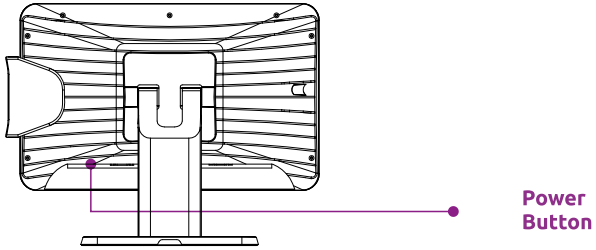

Touch Calibration

Your touch machine has been factory calibrated and does not require any additional manual calibration.

Operating System Description

POS products are integrated with Andriod operating system to ensure the machine is directly usable after unboxing.

Section 4 /
Optional Upgrades

Customizable Brightness

The brightness could be upgraded up to 1000nits to satisfy various application scenarios.

Customizable Screen

Besides basic water and dust proof display, POS offers additional solutions such as explosion proof screen, anti-glare screen, and touch screen product for industrialized environments.

Optional Accessories

POS offers various adaptive accessories for the POS series products, including but not limited to: MSR(card reader), scanner, printer, cash drawer, VFD, customer display, etc. (These products are optional when purchasing POS series products.)

Section 5 /

Technical Support

If you find any problem or trouble with your POS machines, please refer to the following suggestions first. If the problems still remain, you can contact the sales dealer or our social media on every platform.

Regular solutions to common problems

Problem	Suggested Troubleshooting
NO Electricity	1. Check the power adaptor working situation 2. Verify if the electric socket is not broken 3. Make sure the power button is still working
NO Display (Displayed In Black)	1. Check if adaptor is connected to a working electric socket 2. Check if memory generally has poor contact and damage
Abnormal (No Touch Function)	1. Check the touch device displayed in the Android Device Manager 2. Shut down the system and reboot 3. Ensure that the touch screen is not broken

Section 6 /

Maintenance and Safety

Safety Measures

◎ To avoid electric shock, please observe all safety precautions and do not disassemble the POS machine. Dismantlement work should only be carried out by qualified technicians.

◎ Do not plug or insert anything into the heat dissipation hole or ventilation hole.

◎ Please use the original AC/DC adaptor to ensure the safety of the machines. If the adaptor is broken, only use authorized products by POS to provide power to the POS terminal.

◎ Ensure that the system is maintained and operated under the environmental conditions specified below.

Power Supply Type	Monitor input: 12VDC ±5%, 5.0 A; DC Jack (2.5 ¢) AC to DC power brick input: 90-240 VAC, 50/60 Hz
Temperature	Operating: 0°C to 40°C ; Storage: -20°C to 60°C
Humidity	Operating: 20%-80%; Storage: 10%-90%

Notice

- All USB ports cannot be used for power supply or charging, which may cause damage to the device.
- When removing a network cable, press the hook of the cable end to unlock it to avoid damage to the interface.
- All peripheral devices are not hot-swappable. Do not pull on power cable or peripheral devices' connector cable. Doing so may cause fire, electric shock or electronic system malfunction.
- Do not use chemical cleaners to wipe the screen.
- Please do not block the heat dissipation holes to affect the heat dissipation effect,it may reduce the operating performance, or even crash.
- Always ensure that the correct power voltage is used as a precaution against fire and electrical shock.
- Avoid exposing product to direct sunlight. Do not use product in areas of high humidity. Doing so may cause low reliability and/or operational malfunction.
- Be careful of static electricity on PCB of system with anti-static appliances. Doing so may cause inferior reliability and shorted product life.
- Keep product away from highly static areas. This may lead to inferior performance and reduced life cycle.
- Do not interfere with, or obstruct metal components inside product. Doing so may cause the risk of fire or electric shock.
- Use caution when around other electronic devices with possible high frequency or electro-magnetic effects e.g. Audio, Electronic-range etc. Doing so will lead to the serious risk of product malfunctioning or a system error occurring.

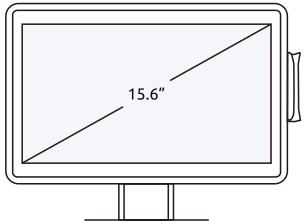

FCC Caution:

This device complies with part 15 of the FCC Rules. Operation is subject to the following two conditions: (1) this device may not cause harmful interference, and (2) this device must accept any interference received, including interference that may cause undesired operation.

Any changes or modifications not expressly approved by the party responsible for compliance could void the user's authority to operate the equipment.

NOTE: This equipment has been tested and found to comply with the limits for a Class B digital device, pursuant to Part 15 of the FCC Rules. These limits are designed to provide reasonable protection against harmful interference in a residential installation. This equipment generates, uses and can radiate radio frequency energy and, if not installed and used in accordance with the instructions, may cause harmful interference to radio communications. However, there is no guarantee that interference will not occur in a particular installation.

If this equipment does cause harmful interference to radio or television reception,which can be determined by turning the equipment off and on, the user is encouraged to try to correct the interference by one or more of the following measures:

-- Reorient or relocate the receiving antenna.

-- Increase the separation between the equipment and receiver.

-- Connect the equipment into an outlet on a circuit different
from that to which the receiver is connected.

-- Consult the dealer or an experienced radio/TV technician for help.

To maintain compliance with FCC' s RF Exposure guidelines, This equipment should be installed and operated with minimum distance between 20cm the radiator your body: Use only the supplied antenna.