STEPR PRO+

USER MANUAL

TABLE OF CONTENTS

WARNINGS AND SAFETY INFORMATION 02

PROPER USAGE 10

FCC INFORMATION 13

ASSEMBLY 14

MOVING THE STEPR 25

CLASS SCREEN 26

GROUNDING METHODS 28

EXPLODED DRAWING 29

PARTS LIST 30

IMPORTANT SAFETY INSTRUCTION!

When using the STEPR, basic precautions should always be followed, including the following:

Read all instructions before using the STEPR.

DANGER – To reduce the risk of electric shock:

1. Always unplug the STEPR from the electrical outlet immediately after using and before cleaning.

WARNING – To reduce the risk of burns, fire, electric shock, or injury to persons:

1. The STEPR should never be left unattended when plugged in. Unplug from outlet when not in use, and before putting on or taking off parts.
2. Use the STEPR only for its intended use as described in this manual. Do not use attachments not recommended by the manufacturer.
3. Never operate the STEPR if it has a damaged cord or plug, if it is not working properly, if it has been dropped or damaged, or dropped into water. Return the STEPR to a service center for examination and repair.
4. Keep the cord away from heated surfaces.
5. Never operate the STEPR with the air openings blocked. Keep the air openings free of lint, hair, and alike items.

IMPORTANT SAFETY INSTRUCTION!

6. Never drop or insert any object into any opening.

7. Do not use outdoors.

8. Do not operate where aerosol (spray) the STEPRs are being used or where oxygen is being administered.

9. To disconnect, turn the STEPR off, then remove the plug from the outlet.

10. Connect the STEPR to a properly grounded outlet only. See grounding instructions.

11. The STEPR is not intended for use by persons with reduced physical, sensory or mental capabilities, or lack of experience and knowledge, unless they have been given supervision or instruction concerning use of the STEPR by a person responsible for their safety. Keep children under the age of 13 away from the STEPR.

12. Do not carry the STEPR by supply cord or use cord as a handle.

SAVE THESE INSTRUCTIONS

The specifications of the STEPR may vary slightly from the illustrations and are subject to change without notice.

WARNING

Read all instructions carefully before using the STEPR. Retain this owner's manual for future reference:

There are several areas during the assembly process that special attention must be paid. It is very important to follow the assembly instructions correctly and to make sure all parts are firmly tightened. If the assembly instructions are not followed correctly, the STEPR could have parts that are not tightened and will seem loose and may cause irritating noises. To prevent damage to the STEPR, the assembly instructions must be reviewed and corrective actions should be taken.

Never operate the STEPR if it has a damaged cord or plug, if it is not working properly, if it has been damaged, or immersed in water.

When emergency happens, take away the "emergent stop button" immediately.

There is a certain risk of too fast speed, it is recommended that users do not use too fast speed directly after starting the STEPR.

Caution: Read the assembly instruction carefully, follow the instruction when assemble.

Manufacturer： STEPR Pty Ltd
ADD:2 Activity Crescent ,Molendinar,
Queensland 4214, AUSTRALIA

ATTENTION

1. Before starting any exercise program, consult with your physician or health professional.
2. Check all the bolts locked.
3. Never put the STEPR in the wetness area, or it will cause troubles.
4. We take no responsibility for any troubles or hurts due to above reasons.
5. Dress sport clothes and shoes before running.
6. Do not do exercise in 40 minutes after meal.
7. To prevent hurts, please warm up before exercise.
8. Consult with doctor before exercise if you have high blood pressure.
9. The STEPR is only used for adults and indoor using.
10. Provide the olds, children and handicapped with good care, guide and supervision.
11. Do not plug anything into any parts of The STEPR, or it may damage.
12. Do not connect line to the middle of cable; do not lengthen cable or change the cable plug; do not put any heavy thing on cable or put the cable near the heat source; forbid using socket with several holes, these may cause fire or people may be hurt by the power.
13. Cut off the power when the STEPR is not used. When the power is cut off , do not pull the power line to keep the wire unbroken.
14. Maximum weight of user: 400lbs (180kgs).

ATTENTION

15. Pulse monitor data may not be accurate, can not be used for medicine. Over-exercise may cause injury, even death. If you have a feeling of dizziness, sickness or other abnormal symptoms, please stop training and consult a doctor immediately.

16. The class of the STEPR is：SC

17. That injuries to health may result from incorrect or excessive training.

    The STEPR can be used by children aged from 14 years and above and persons with reduced physical, sensory or mental capabilities or lack of experience and knowledge if they have been given supervision or instruction concerning use of the STEPR in a safe way and understand the hazards involved.

CARE AND MAINTENANCE

Care and, if applicable, maintenance advice shall be provided with each piece of the equipment. The advice shall include at least:

a. A warning notice to the effect that the safety level of the STEPR can be maintained only if it is examined regularly for damage and wear, e.g. ropes, pulleys, connection points;

b. An advice to replace defective components immediately and/or keep the STEPR out of use until repair;

c. Special attention to components most susceptible to wear.

IMPORTANT SAFETY PRECAUTION

- If you experience any kind of pain, including but not limited to chest pains, nausea, dizziness, or shortness of breath, stop exercising immediately and consult your physician before continuing.
- When exercising, always maintain a comfortable pace.
- Do not wear clothes that might catch on any part of the STEPR.
- Always wear athletic shoes while using the STEPR.
- Do not jump on the STEPR.
- At no time should more than one person be on the STEPR while in operation.
- The STEPR should not be used by persons weighing more than specified on this manual. Failure to comply will void the warranty.
- Disconnect all power before servicing or moving the STEPR. To clean, wipe surfaces down with soap and slightly damp cloth only;never use solvents.
- The STEPR should never be left unattended when plugged in. Unplug from outlet when not in use,and before putting on or taking off parts.
- Do not operate under blanket or pillow. Excessive heating can occur and cause fire, electric shock, or injury to persons.
- Connect the STEPR to a properly grounded outlet only.
- At NO time should children under the age of 13 or pets be within 10 feet of the machine.

IMPORTANT SAFETY PRECAUTION

- Keep children under the age of 13 away from this exercise the STEPR.Teenagers must be supervised at all times while using the STEPR.
- The STEPR is not intended for use by persons with reduced physical,sensory or mental capabilities, or lack of experience and knowledge,unless they have been given supervision or instruction concerning use of the STEPR by a person responsible for their safety.
- Use the STEPR only for its intended use as described in the owner's manual.
- Do not use other attachments that are not recommended by the manufacturer. Attachments may cause injury.
- Never operate the STEPR if it has a damaged cord orplug, if it is not working properly, if it has been dropped ordamaged, or immersed in water.
- Keep power cord away from heated surfaces. Do not carry this unit by its supply cord or use the cord as a handle.
- Never operate the STEPR with the air opening blocked.Keep the air opening clean, free of lint, hair, and the like.
- To prevent electrical shock, never drop or insert any object into any opening.
- Do not operate where aerosol (spray) the STEPRs are being used or when oxygen is being administered.
- To disconnect, turn all controls to the off position, then remove plug from outlet.
- Do not use the STEPR in any location that is not temperature controlled, such as but not limited to garages, porches, pool rooms, bathrooms, car ports or outdoors. Failure to comply may void the warranty. not temperature controlled, such as but not limited to garages, porches, pool rooms, bathrooms, car ports or outdoors. Failure to comply may void the warranty.

IMPORTANT SAFETY PRECAUTION

- Do not remove the console covers unless instructed by Customer Tech Support. Service should only be done by an authorized service technician.
- Make sure there is no less than 2*1m free space behind the STEPR.
- In case of any Abnormality during the use process, please press the emergency button and get off the STEPR after it stops.
- If you observe any damage or wear on the mains plug or on any section of the mains lead then please have these replaced immediately by a qualified electrician – do not attempt to change or repair these yourself.
- If the supply cord is damaged, it must be replaced by the manufacturer, its service agent or similarly qualified persons in order to avoid a hazard.
- If you want to dismount the STEPR, you must stop the STEPR completely.
- Indication that the free area shall be not less than 0,6 m greater than the training area in the directions from which the STEPR is accessed. The free area must also include the area for emergency dismount. Where the STEPR is positioned adjacent to each other the value of the free area may be shared. The free area and training area shall be illustrated with a dedicated figure.
- Children should be supervised to ensure that they do not play with the STEPR.

  Cleaning and user maintenance shall not be made by children without supervision.

PROPER USAGE

1. As shown in the figure below, the user enters the step area of the stair trainer from the direction of the arrow, walks up the steps, and clicks the start button to start using the machine.

2. As shown in the figure below, after the user finishes exercising, click the stop button. After the stair trainer stops smoothly, the user exits the step area of the STEPR from the direction of the arrow.

3. If the stairs shake too much during exercise, it means that the chain is too loose. Please remove the left and right protective cover of the main frame, and use a hexagonal T-type wrench to fix the screw of the rear gear clockwise to tighten the chain as shown in Figure 1.As shown in Figure 2, when the gap between the chain and the tube is adjusted to 35mm, you can continue to use the STEPR.

FIGURE 1

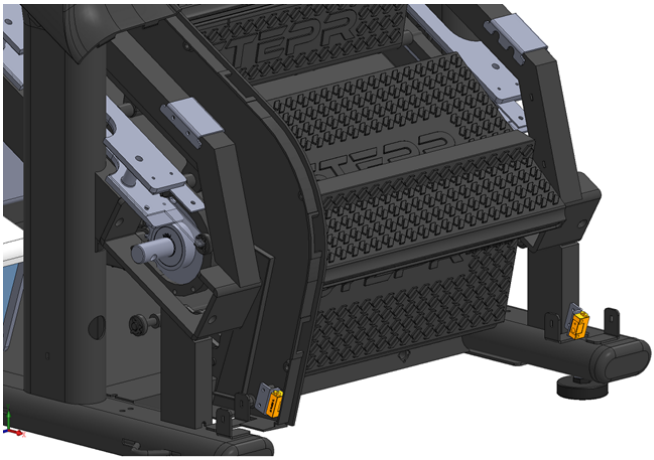

FIGURE 2

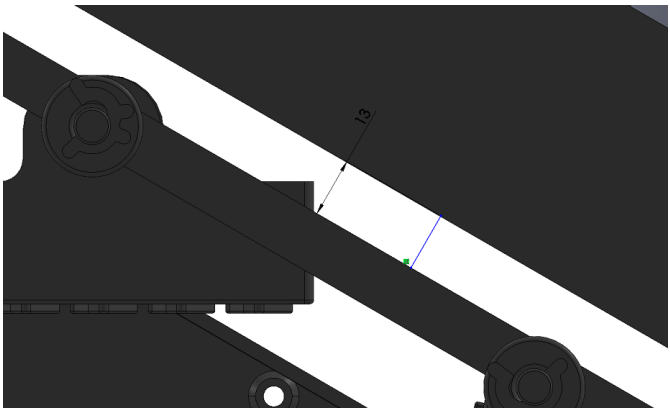

4. If the start/stop button is damaged during use, you cannot continue to use the STEPR, and you need to replace the internal electronic parts before you continue to use the STEPR.

5. The surface of stairs are plastic, which is easy to wear and tear. Please ensure that the user's soles are clean when using it.

6. There are two EMERGENCY STOP BUTTONS on the STEPR. One emergency stop button is located at the below of the handlebars and the second is located on the lower right side handlebar. The EMERGENCY STOP BUTTONS will bring the step surfaces to a complete stop when pressed.

7. Stand directly in front of the STEPR. Grasp the handlebars and step onto the STEPR until you are within comfortable reach of the console, top emergency stop lever, and in-reach handlebar controls.

8. To determine proper workout position, stand on the steps within comfortable reach of the console. Maintain a constant distance from the console and in-reach handlebar controls. Keep your knees slightly bent at all times.

FCC information to the user

1. Caution: Changes or modifications not expressly approved by the party responsible for compliance could void the user's authority to operate the STEPR.

2. Note: the STEPR has been tested and found to comply with the limits for a Class B digital device, pursuant to part 15 of the FCC Rules. These limits are designed to provide reasonable protection against harmful interference in a residential installation. the STEPR generates, uses and can radiate radio frequency energy and, if not installed and used in accordance with the instructions, may cause harmful interference to radio communications. However,there is no guarantee that interference will not occur in a particular installation. If the STEPR does cause harmful interference to radio or television reception,which can be determined by turning the STEPR off and on, the user is encouraged to try to correct the interference by one or more of the following measures:

   - Reorient or relocate the receiving antenna.
   - Increase the separation between the STEPR and receiver.
   - Connect the STEPR into an outlet on a circuit different from that to which the receiver is connected.
   - Consult the dealer or an experienced radio/TV technician for help.

This device complies with Part 15 of the FCC Rules and Industry Canada licence-exempt RSS standard(s). Operation is subject to the following two conditions:
(1) this device may not cause harmful interference, and
(2) this device must accept any interference received, including interference that may cause undesired operation.

Le présent appareil est conforme aux CNR d'Industrie Canada applicables aux appareils radio exempts de licence. L'exploitation est autorisée aux deux conditions suivantes :

(1) l'appareil ne doit pas produire de brouillage, et
(2) l'utilisateur de l'appareil doit accepter tout brouillage radioélectrique subi, même si le brouillage est susceptible d'en compromettre le fonctionnement.

FCC& IC Radiation Exposure Statement:
This equipment complies with FCC and Canada radiation exposure limits set forth for an uncontrolled environment. This equipment should be installed and operated with a minimum distance of 20cm between the radiator and your body.
This transmitter must not be co-located or operating in conjunction with any other antenna or transmitter.
Déclaration d'IC sur l'exposition aux radiations:
Cet équipement est conforme aux limites d'exposition aux radiations définies par le Canada pour des environnements non contrôlés. Cet équipement doit être installé et utilisé à une distance minimum de 20 cm entre l'antenne et votre corps.
Cet émetteur ne doit pas être installé au même endroit ni utilisé avec une autre antenne ou un autre émetteur.

STEPR Pty Ltd
2 Activity Crescent, Molendinar, Queensland 4214, AUSTRALIA

BT LE frequency: 2402MHz to 2480MHz
BT LE max output power: 0.24 dBm
WPC frequency:127.139 kHz to 143.906 kHz
H-field: 32.74 dBuA/m@10m

ASSEMBLY STEPS

Note: The floor area of this machine is 49.6" 32.8" (1260x 835mm)
Weigth: 380lbs (172kgs)

STEP 1

1. Open the package, take out all parts and place the Main frame (1) on the flat ground.

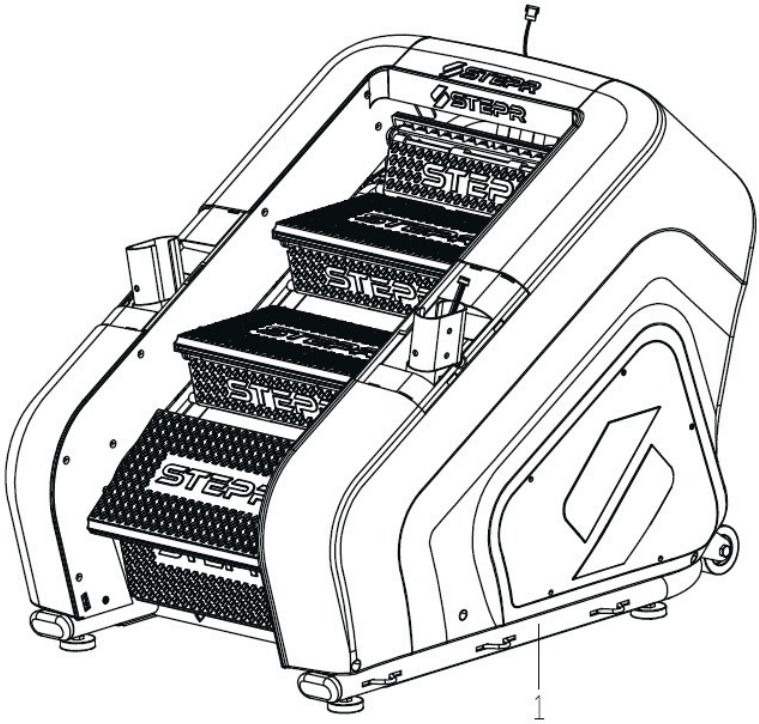

STEP 2

1. Pass the Switch upper wire 2(123) through the right Decorative cover (49R)to connect with the Switch lower wire2 (124);

2. Cover the Decorative cover (49L / R) to the Upright tube (2L / R), then lock the Upright tube (2L/R) to the Main frame (1) with six M10*20 Hex socket screws (74) and six φ10*1.2 Lock washers (102). (Please don't tighten them now)

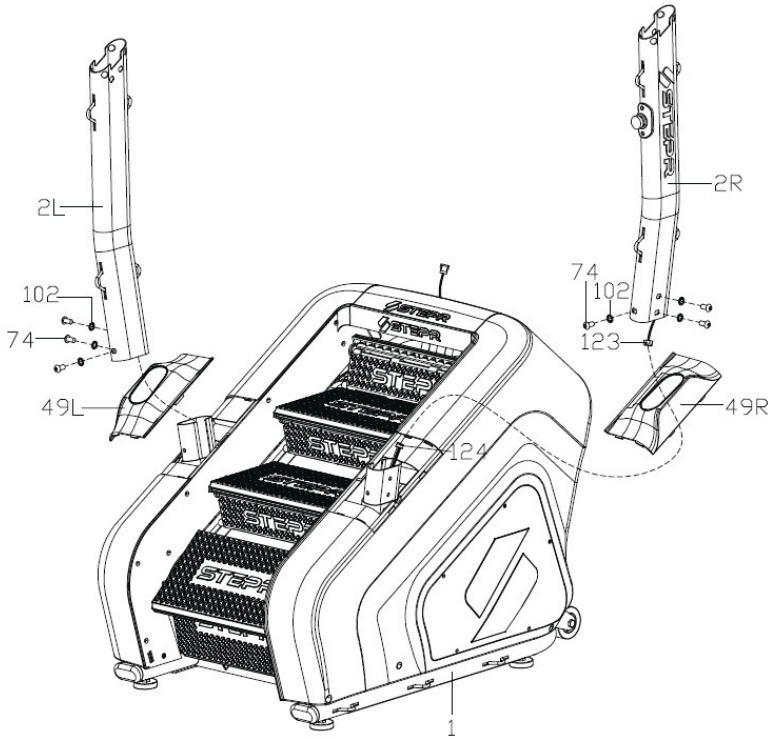

STEP 3

1. Connect the Console lower extension wire (119)to the Console lower wire (120).

2. Attach the Console mast 2 (5) to Main frame (1) with four M10*30 Hex socket screws(73) and four φ10 Flat washers(105).(Please don't tighten them now)

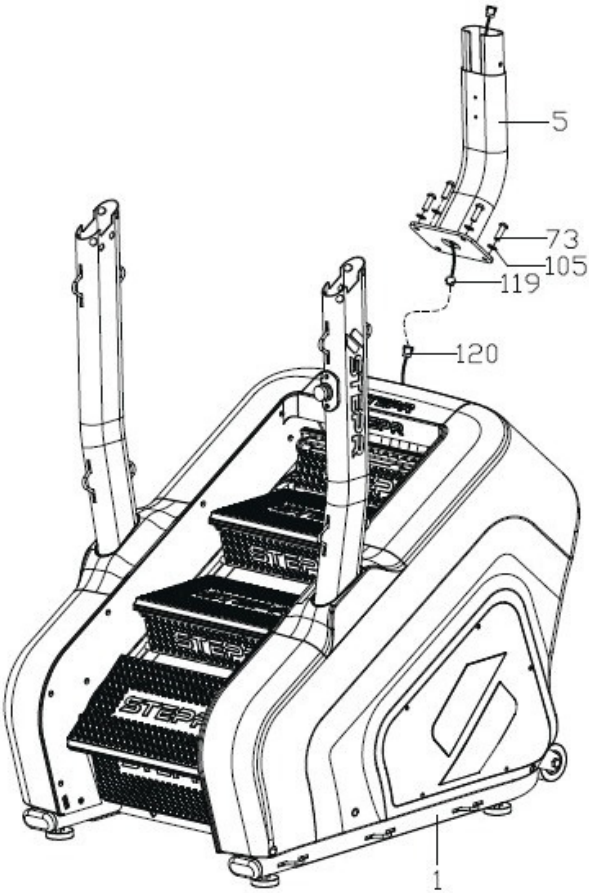

STEP 4

1. Lock the Console (132) to Mounting bracket (6) with four M10*20 Hex socket screws (74) and four φ10*1.2 Lock washers (102).

2. Insert the Key board extension wire (128),Console upper extension wire (118), Wireless charging of the upper line (161) ,Switch lower wire (122) and Wireless pulse lower wire (126) into the corresponding sockets of the Socket board (131) (As shown in figure A,B).

3. Lock the Computer cover adornment (36) to Console (132) with five ST4.0*16 Cross tapping screws (89).

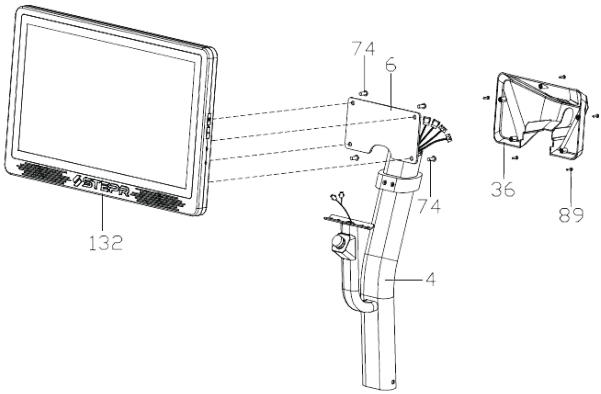

Figure1

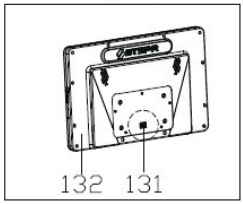

Figure 2

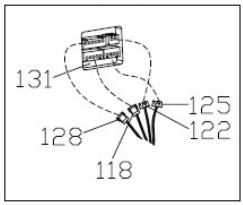

STEP 5

1. Connect the Console upper extension wire (118) to the Console lower extension wire (119) .

2. Attach the Console mast 1 (4) to the Console mast 2 (5) with four M10*20 Hex socket screws (74) and four φ10*1.2 Lock washers (102).(Please don't tighten them now).

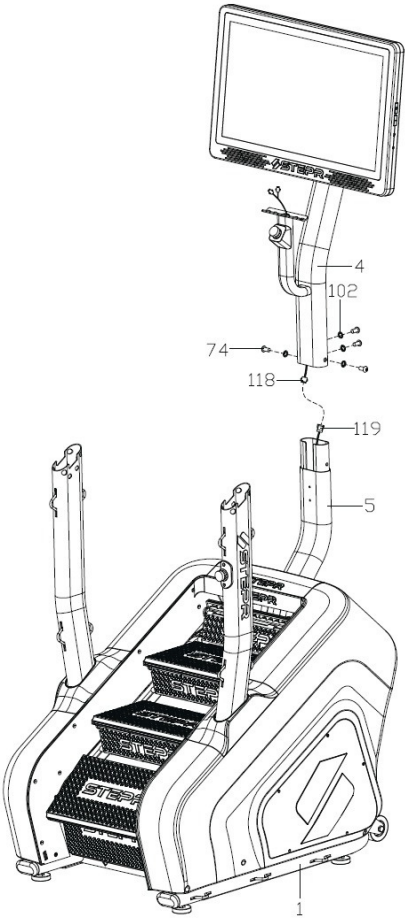

STEP 6

1. Insert Key board lower wire a (129a) go through hole D of right Handrails (3R) and come out of hole C of right Handrails (3R) and slide the left Handrails (3L) and the right Handrails (3R) together.(Please be careful not to clip the wires).

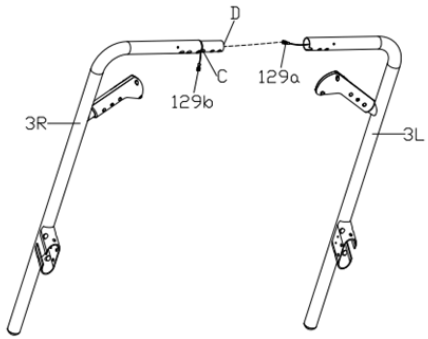

STEP 7

1. Cover the Handrails (3L/R) to the Upright tube (2L/R).

2. Put Wireless charging of the upper line （161） through the hole R in Handrails （3L/R） and out of the hole S.

3. Connect the Key board lower wire a(129a) and Key board lower wire b(129b) to the Key board extension wire (128). And plug all wire connectors and wires into the connection tube of Console mast 1(4) through hole E. （Be careful not to clip wires）

4. Insert the Position G of the Handrails (3L/R) into Upright tube (2L/R), align the holes and then lock the Handrails (3L/R) to Upright tube (2L/R) with six M10*20 Hex socket screws (74) and six φ10*1.2 Lock washers (102).(Please don't tighten them now)

5. Align the holes of the Handrails (3L/R) to the connection tube of the Console mast (4),and then lock the Handrails (3L/R) to the connection tube of Console mast (4) with four M8*20 Hex bolts (77) and four φ8*1.2 Lock washers (103).

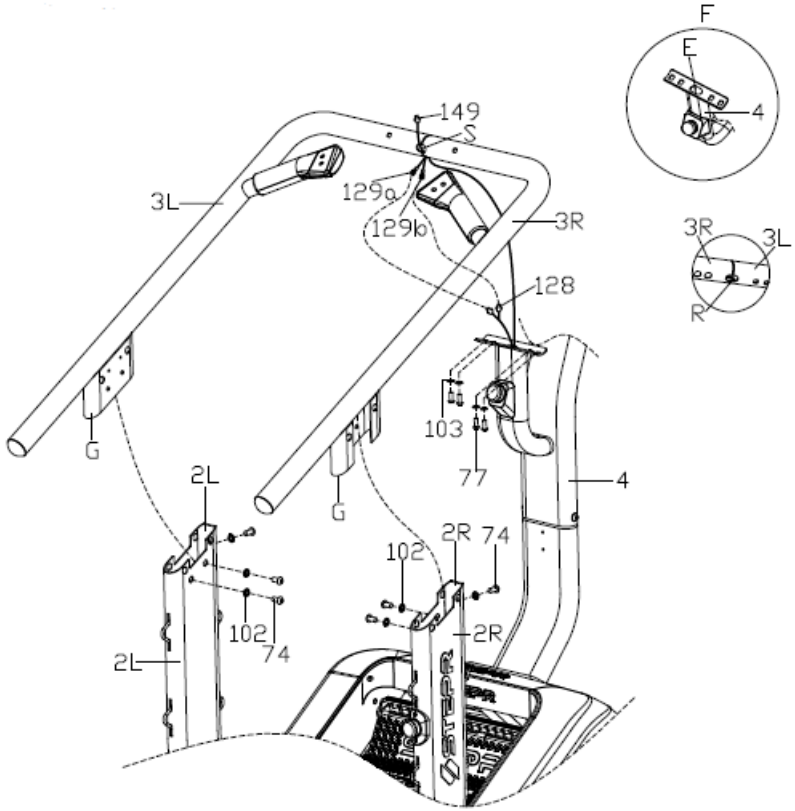

STEP 8

1. Lock all the sixteen M10*20 Hex socket screws (74) and the four M10*30 Hex socket screws (73) that are not locked tightly in the previous assembly steps.

2. Clip the snap joint at H of Decorative cover (49L/R) into Protective cover (44L/R), and then press the snap joint at K of Decorative cover (49L/R) down to Protective cover (44L/R). Lock the Decorative cove fixture(87)to the Inner protective cover(45L/R)with Cross tapping screw ST4.0*16(89)

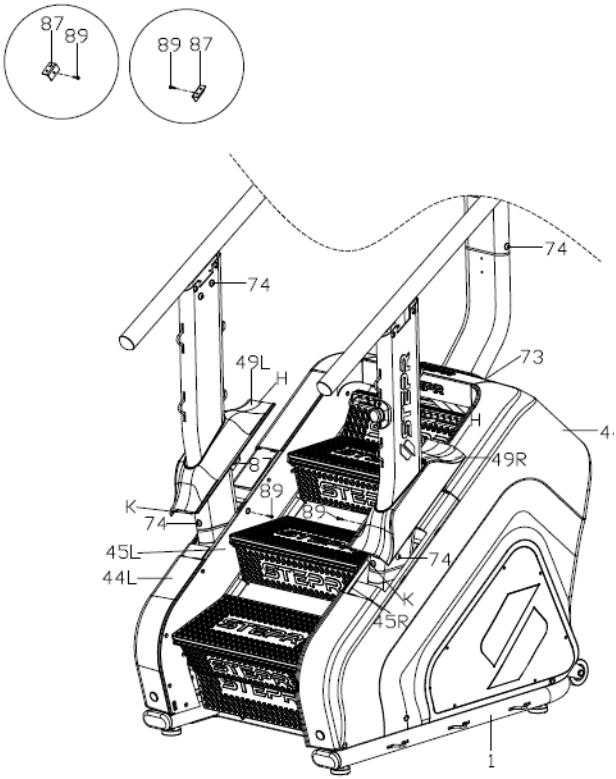

STEP 9

1. Connect Wireless charging of the upper line (161) to Wireless charging of the lower line (162)

2. Place the Phone holder (133) to the Handrails (3L/R) and lock the Phone holder (133) to the Handrails (3L/R) with two ST4.0*16 Cross tapping screws (89). (Note:Please avoid Key board lower wire a/b(129a/b) to break the wire)

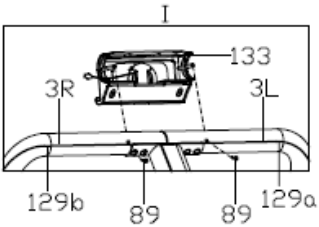

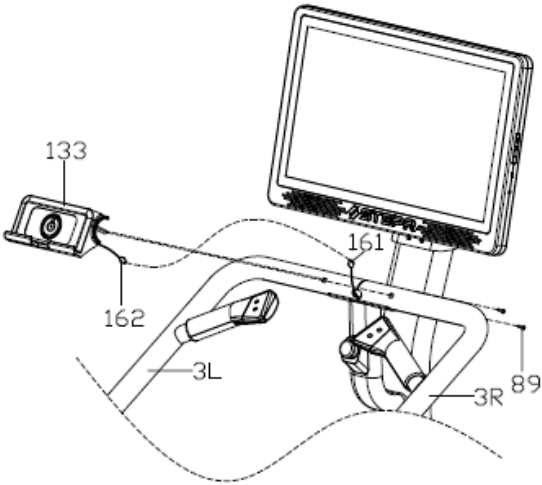

STEP 10

1. Lock the Exterior decorative cover (41L/R) to Handrails (3L/R) with four ST4.0*16 Cross tapping screws (89).

2. Lock the Interior decorative cover (42L/R) to Upright tube(2L/R) with four ST4.0*16 Cross tapping screws (89).

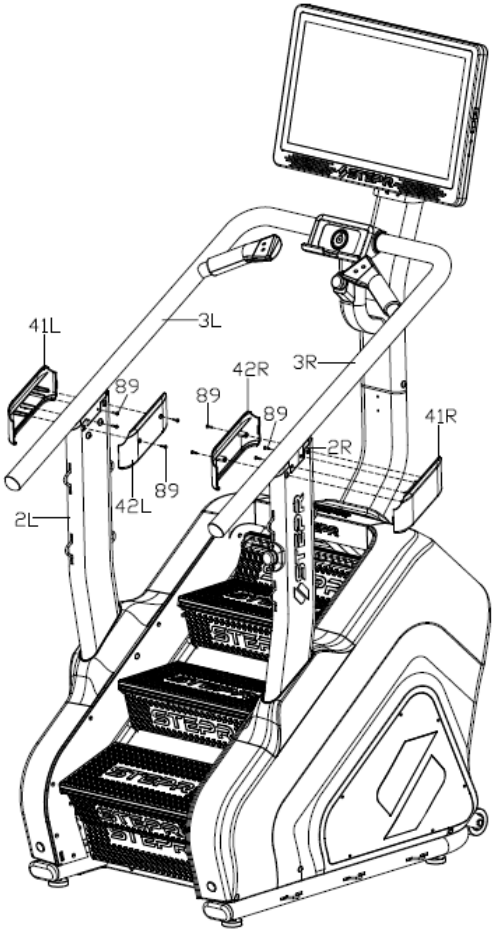

STEP 11

1. Lock the Bottle holder (40) to the Console mast 2 (5) with two M6*25 Hex socket cap screws (79).

2. Put the Console mast decorative cover (55)apart with hands and then cover it into the Console mast 2 (5).

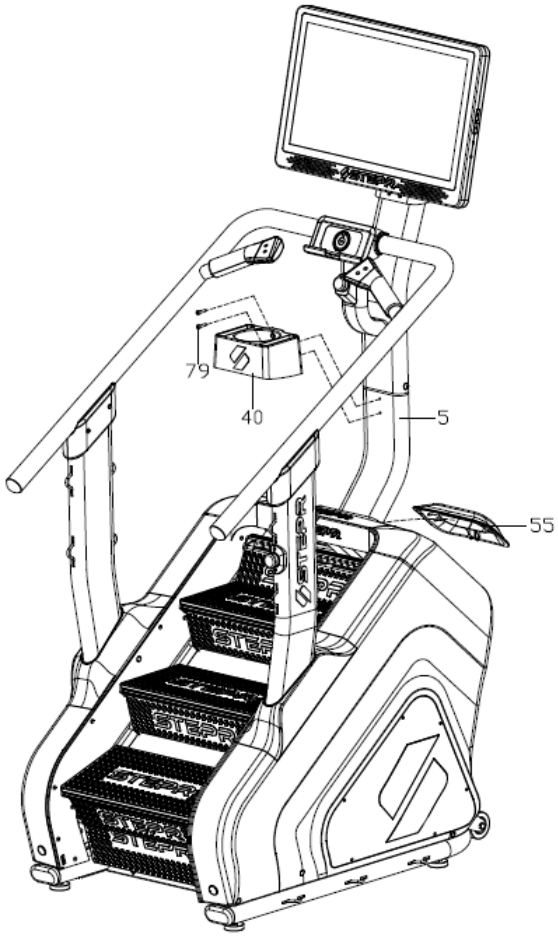

MOVING THE STEPR

Screw the two Transport handles (138) into the main frame (1) , after the completion of moving machine, and screw the Transport handles (138) out and put them away for use next time.

WARNING: the STEPR is heavy, use care and additional help if necessary when moving. Failure to follow these instructions could result in injury.

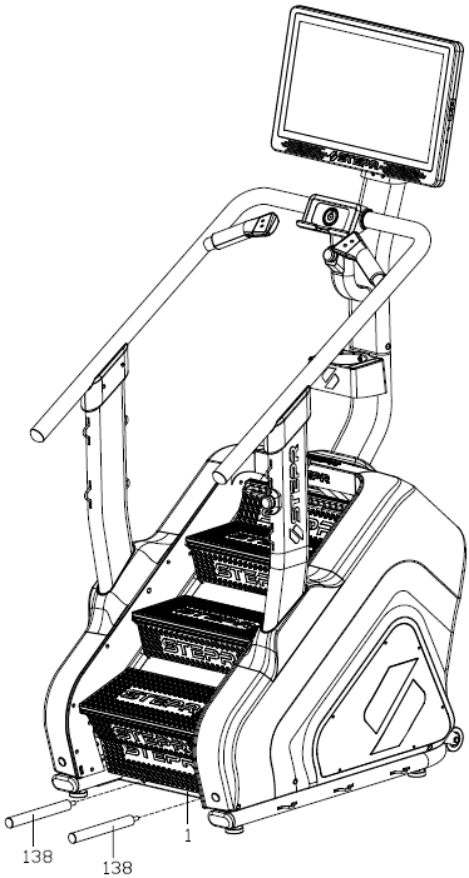

CLASS SCREEN

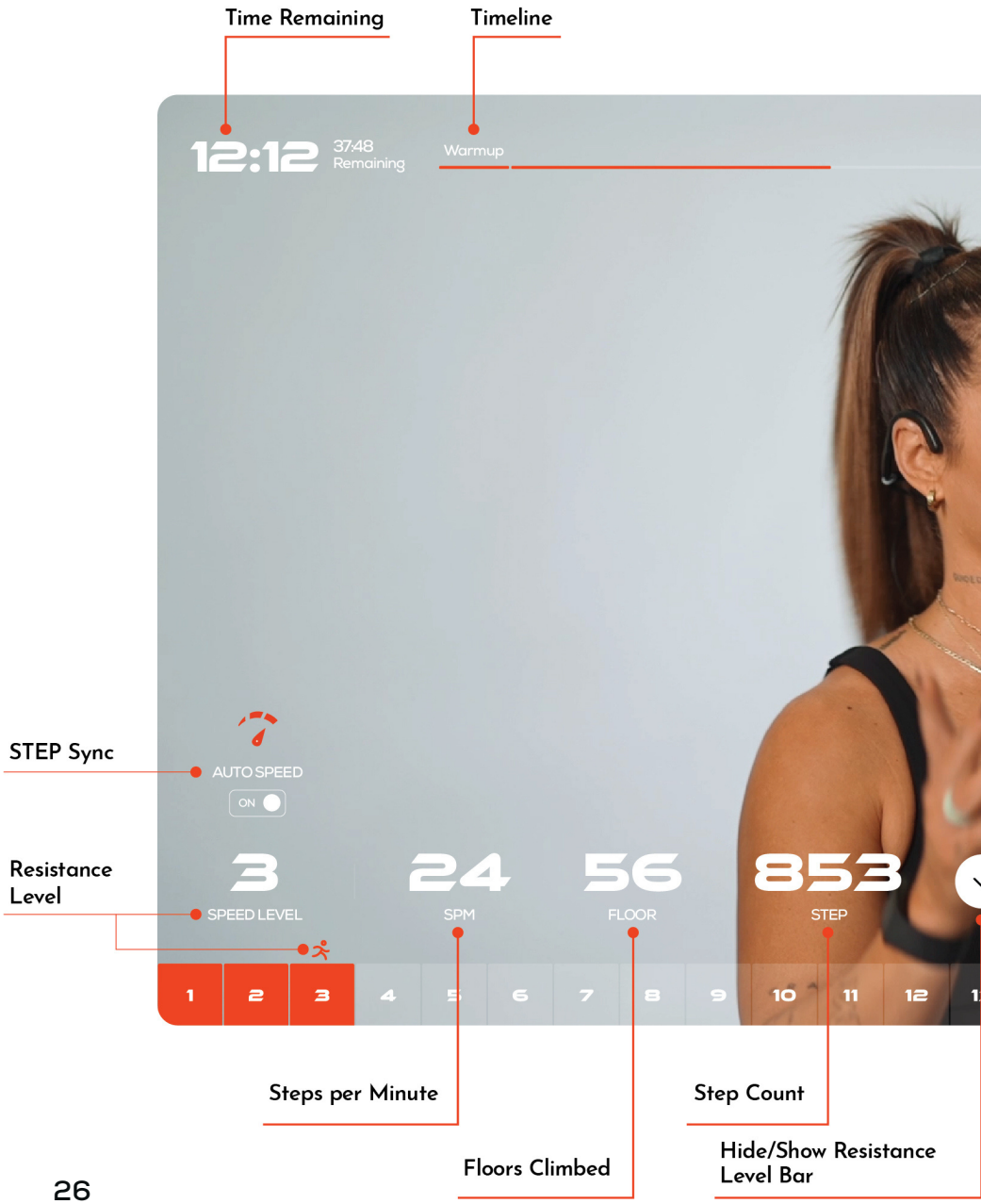

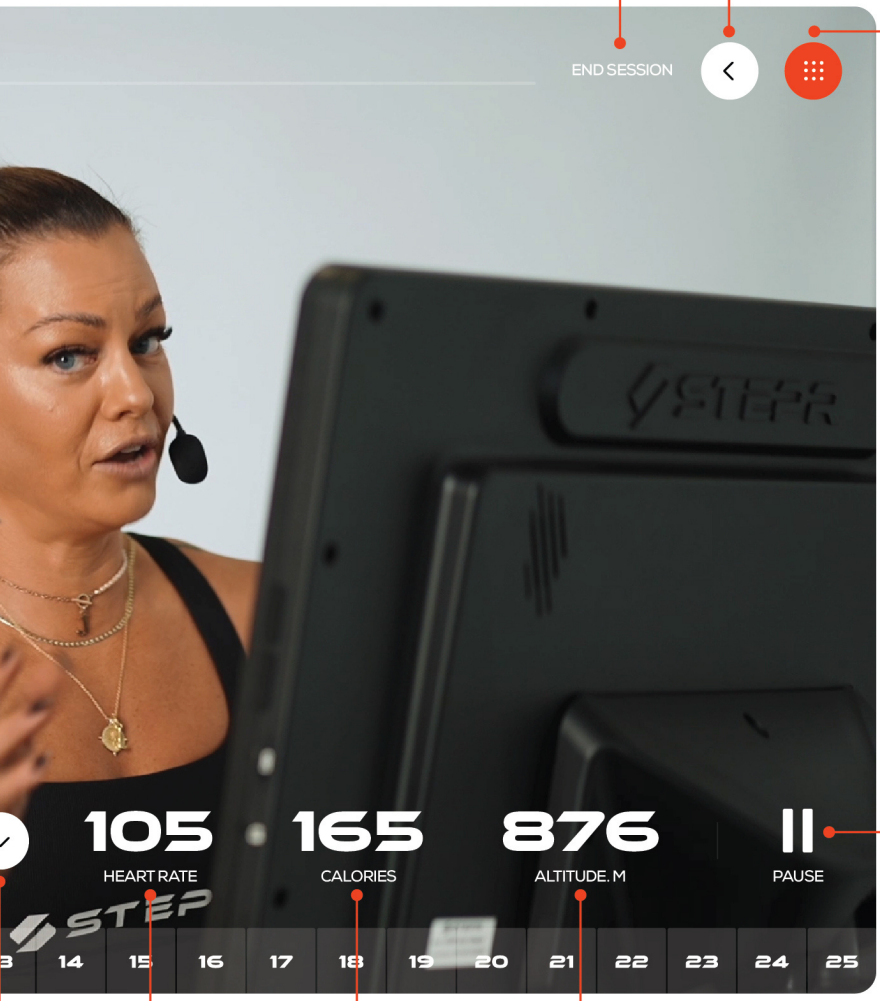

End Session

Volume, Headphones & Heart Rate

Streaming

Play/Pause

Heart Rate

Calories Burnt

Distance Climbed

GROUNDING METHODS

The STEPR must be grounded. If it should malfunction or breakdown, grounding provides a path of least resistance for electric current to reduce the risk of electric shock.

The STEPR is equipped with a cord having an the STEPR-grounding conductor and a grounding plug. The plug must be plugged into an appropriate outlet that is properly installed and grounded in accordance with all local codes and ordinances.

DANGER – Improper connection of the STEPR-grounding conductor can result in a risk of electric shock. Check with a qualified electrician or serviceman if you are in doubt as to whether the the STEPR is properly grounded.

Do not modify the plug provided with the the STEPR – if it will not fit the outlet, have a proper outlet installed by a qualified electrician.

The STEPR is for use on a nominal 100-240volt circuit and has a grounding plug that looks like the plug illustrated in sketch A in following figure. Make sure that the the STEPR is connected to an outlet having the same configuration as the plug.

No adapter should be used with the STEPR.

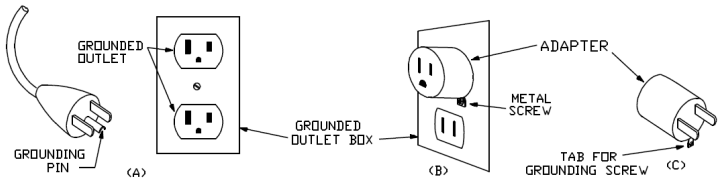

EXPLODED DRAWING

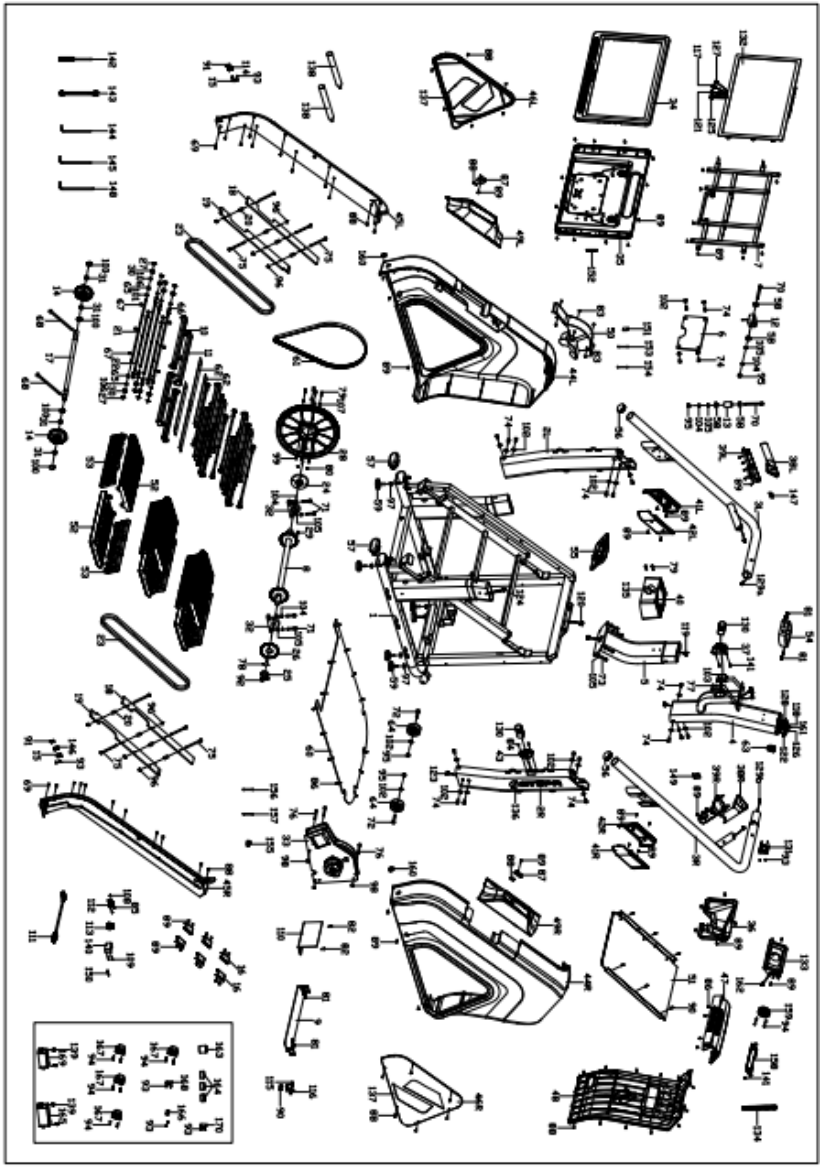

PARTS LIST

Part No.	Description	Qty	Part No.	Description	Qty
1	Main frame	1	35	Computer bottom cover	1
2L	Upright tube-Left	1	36	Computer cover adornment	1
2R	Upright tube-Right	1	37	Switch base 1	1
3L	Handrails-Left	1	38L	Upper cover-Left	1
3R	Handrails-Right	1	38R	Upper cover-Right	1
4	Upper Console mast	1	39L	Lower cover-Left	1
5	Lower Console mast	1	39R	Lower cover-Right	1
6	Mounting bracket	1	40	Bottle/Phone Holder	1
7	Console supporting tube	1	41L	Exterior decorative cover-Left	1
8	Front roller	1	41R	Exterior decorative cover-Right	1
9	Baffle	1	42L	Interior decorative cover-Left	1
10	Stair support 1	6	42R	Interior decorative cover-Right	1
11	Stair support 2	6	43	Switch base 1	1
12	Swivel joint assembly	1	44L	Protective cover-Left	1
13	drivepipe	1	44R	Protective cover-Right	1
14	Rear gear	2	45L	Inner protective cover-Left	1
15	Infrared fastener	2	45R	Inner protective cover-Right	1
16	Cover fixing	6	46L	Exterior protective cover-Left	1
17	Rear roller shaft	1	46R	Exterior protective cover-Right	1
18	Guide	2	47	Upper protective cover	1
19	Guide2	2	48	Rear protective cover	1
20	Support sleeve 1	8	49L	Decorative cover-Left	1
21	Bearing connecting shaft	12	49R	Decorative cover-Right	1
22	Stair connecting shaft	6	50	Flywheel protective cover	1
23	Chain	2	51	Middle baffle	1
24	Pulley shaft sleeve	1	52	Stair 1	6
25	Emergency stop plate sleeve	1	53	Stair 2	6
26	Emergency stop plate	1	54	Cushion	1
27	Clip	24	55	Console mast decorative cover	1
28	Belt pulley	1	56	End cap of handrail	2
29	Flat key 1	1	57	End cap	2
30	Bearing 608Z	24	58	Spacer	4
31	Bearing 6004	4	59	Foot pad	6
32	KP005 pedestal bearing	2	60	Bottom baffle	1
33	Brake combination	1	61	Belt	1
34	Computer upper cover	1	62	EVA silencing pad	12
63	End cap	1	104	Spring washer Φ10	6
64	Roller	2	105	Flat washer Φ10	10
65	Stair spacer 1	12	106	Flat washer Φ8	32
66	Stair spacer 2	12	107	Flat washer Φ6	4
67	Wear washer	30	108	Hex nut M3	2
68	Hex socket cap screw M10*170	2	109	Cross screw M4*40	2
69	Cross countersunk tapping screw ST5.0*25	2	110	Controller	1
70	Hex socket cap screw M10*90	2	111	Power cord	1
71	Hex socket cap screw M10*35	4	112	Switch	1
72	Hex bolt M10*45	2	113	Power socket	1
73	Hex socket screw M10*30	4	114	Infrared emitter	1
74	Hex socket screw M10*20	20	115	Light sensor bracket	1

PARTS LIST

75	Hex socket cap screw M8*110	8	116	Light sensor 1	1
76	Hex socket cap screw M8*75	3	117	Console upper wire	1
77	Hex bolt M8*20	4	118	Console upper extension wire	1
78	Slotted flat point set screw M4*5	3	119	Console lower extension wire	1
79	Hex socket cap screw M6*25	6	120	Console lower wire	1
80	Slotted flat point set screw M5*10	3	121	Emergency switch upper wire 1	1
81	Cross screw M5*15	8	122	Emergency switch lower wire 1	1
82	Cross screw M4*15	2	123	Emergency switch upper wire 2	1
83	Cross countersunk head screw M5*8	6	124	Emergency switch lower wire 2	1
84	Cross countersunk head screw M4*15	2	125	Wireless pulse upper wire	1
85	Cross countersunk head screw M3*15	2	126	Wireless pulse lower wire	1
86	Cross tapping screw ST4.0*12	17	127	Key board upper wire	1
87	Decorative cove fixture	2	128	Key board extension wire	1
88	Cross countersunk tapping screw ST4.0*16	48	129a	Key board lower wire a	1
89	Cross tapping screw ST4.0*16	67	129b	Key board lower wire b	1
90	Cross screw M4*10	8	130	Emergency stop	2
91	Cross screw M3*15	4	131	Socket board	1
92	Cross screw M3*8	3	132	Console	1
93	Cross tapping screw ST2.9*9.5	14	133	Phone holder	1
94	Cross tapping screw ST2.2*8	20	134	Elastic sleeve	1
95	Nylon nut M10	4	135	Small S logo	1
96	Nylon nut M8	6	136	STEPR logo	2
97	Hex thin nut M10*5	6	137	Big S logo	2
98	Hex thin nut M8	3	138	Transport handle	2
99	Nylon nut M6	4	139	Cross screw M4*8	4
100	Outer snap ring Φ20	4	140	Distance sensor	1
101	E-type snap ring Φ6	18	141	Cross tapping screw ST4.0*8	4
102	Lock washer Φ10*1.2	22	142	Screwdriver	1
103	Lock washer Φ8*1.2	4	143	S17 Wrench	1
144	Allen wrench S5	1	158	Back cover of mobile phone holder	1
145	Allen wrench S6	1	159	Wireless charging module	1
146	Infrared receiver	1	160	spout plug	2
147	Start/Pause shortcut key board	1	161	Wireless charging of the upper line	1
148	Allen wrench S8	1	162	Wireless charging of the lower line	1
149	Speed shortcut key board	1	163	Magnetic ring 1 (optional)	1
150	Fuse	1	164	Magnetic ring 2 (optional)	3
151	Wireless heart rate module	1	165	Inductor filter (optional)	1
152	Volume up/down keypad	1	166	USB port	1
153	Music Bluetooth module and the whole board connection cable	1	167	Speaker (optional)	4
154	Music Bluetooth module includes	1	168	Type-C charge port /Headphone	1
155	Light sensor 2	1	169	Filter(optional)	1
156	The cable connecting the driver t o the electromagnet	1	170	Type-C charging (optional)	1
157	The cable connecting the drive to the brake disc	1			

© STEPR 2024, | STEPR, INC. All rights reserved.
getstepr.com