TAOGLAS®

Datasheet

# 2.4GHz 5dBi Terminal Mount Dipole Antenna

**Part No:**
**GW.34.5153**

**Description:**

Wi-Fi® 2.4GHz 5dBi Dipole Terminal Mount Antenna RP-SMA(M) Hinged

**Features:**

2.4GHz Band Operation

5dBi Gain

High Efficiency up to 80%

Hinged RP-SMA (M) Connector

Height: 198mm

Diameter: 13mm

RoHS & Reach Compliant

| | | |
|---|---|---|
| 1. | Introduction | 3 |
| 2. | Specifications | 4 |
| 3. | Antenna Characteristics | 6 |
| 4. | Radiation Patterns | 8 |
| 5. | Mechanical Drawing | 11 |
| 6. | Packaging | 12 |
| | Changelog | 13 |


Taoglas makes no warranties based on the accuracy or completeness of the contents of this document and reserves the right to make changes to specifications and product descriptions at any time without notice. Taoglas reserves all rights to this document and the information contained herein. Reproduction, use or disclosure to third parties without express permission is strictly prohibited.

Ireland & USA
ISO 9001:2015
Certified

Taiwan
ISO 9001:2015
Certified

# 1. Introduction

The Taoglas GW.34 is a 2.4 & 5.8GHz Wi-Fi® terminal mount dipole antenna. At just 198mm in height and 13mm in diameter, the robust TPEE enclosure can be mounted straight or at right angle to the device with its hinged RP-SMA(M) connector. It is ideal for applications such as Bluetooth®, BLE, ZigBee® and Wireless LAN. The GW.82, designed for superior performance and reliability, has an omnidirectional radiation pattern and extremely high efficiency and gain on both the 2.4 & 5.8GHz bands.

Typical applications include:

- Smart Home - Gateways/Routers - Connected Agriculture

The GW.34 has up to 5dBi Peak making it a cost-effective, high-performing choice for any indoor or outdoor application. Many module manufacturers specify peak gain limits for any antennas that are to be connected to that module. Those peak gain limits are based on free-space conditions. In practice, the peak gain of an antenna tested in free-space can degrade by at least 1 or 2dBi when installed. So ideally you should go for a slightly higher peak gain antenna than mentioned on the module specification to compensate for this effect. This provides you with improved performance. Upon testing of any of our antennas with your device and appropriate layout, integration technique, or cable, we can work with you to make any of our antennas' perform below the peak gain limits. Taoglas can then issue a specification and/or report for the selected antenna in your device that will clearly show it complying with the peak gain limits. You can be assured that you are meeting the regulatory requirements for that module whilst getting the best performance possible, without exceeding the peak gain limits.

For further information, or support to test and integrate this product please contact your regional Taoglas customer support team.

# 2. Specifications

| Electrical | |
|---|---|
| **Frequency (MHz)** | **2400~2500** |
| **Efficiency (%)** | |
| Straight | 78.56 |
| Bent | 83.20 |
| **Average Gain (dB)** | |
| Straight | -1.05 |
| Bent | -0.80 |
| **Peak Gain (dBi)** | |
| Straight | 4.22 |
| Bent | 5.89 |
| **Impedance** | 50Ω |
| **Polarization** | Linear |
| **Radiation Pattern** | Omni |
| **Max. input power** | 1W |
| **Mechanical** | |
| **Height** | 198 ±3.3 mm |
| **Planner Dimension** | 198*Ø13 mm |
| **Casing** | TPEE |
| **Connector** | RP-SMA(M) |
| **Weight** | 22.5 g |
| **Environmental** | |
| **Temperature Range** | -40°C to 85°C |
| **Humidity** | Non-condensing 65°C 95% RH |

# 3. Antenna Characteristics

## 3.1 Return Loss

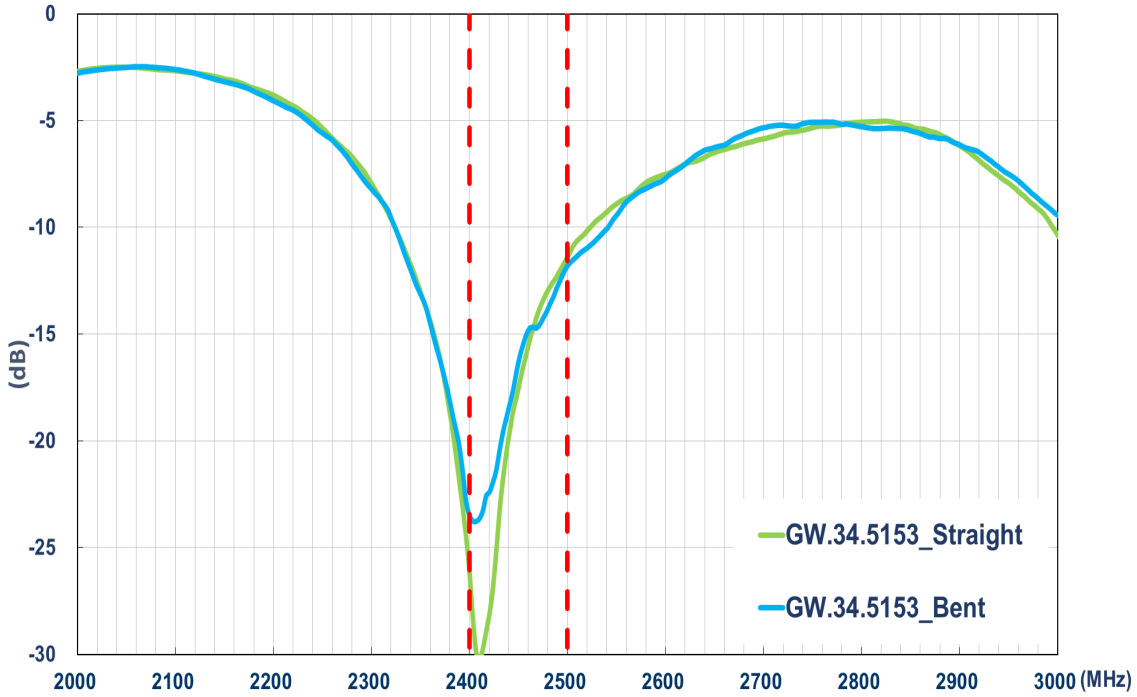


## 3.2 Efficiency

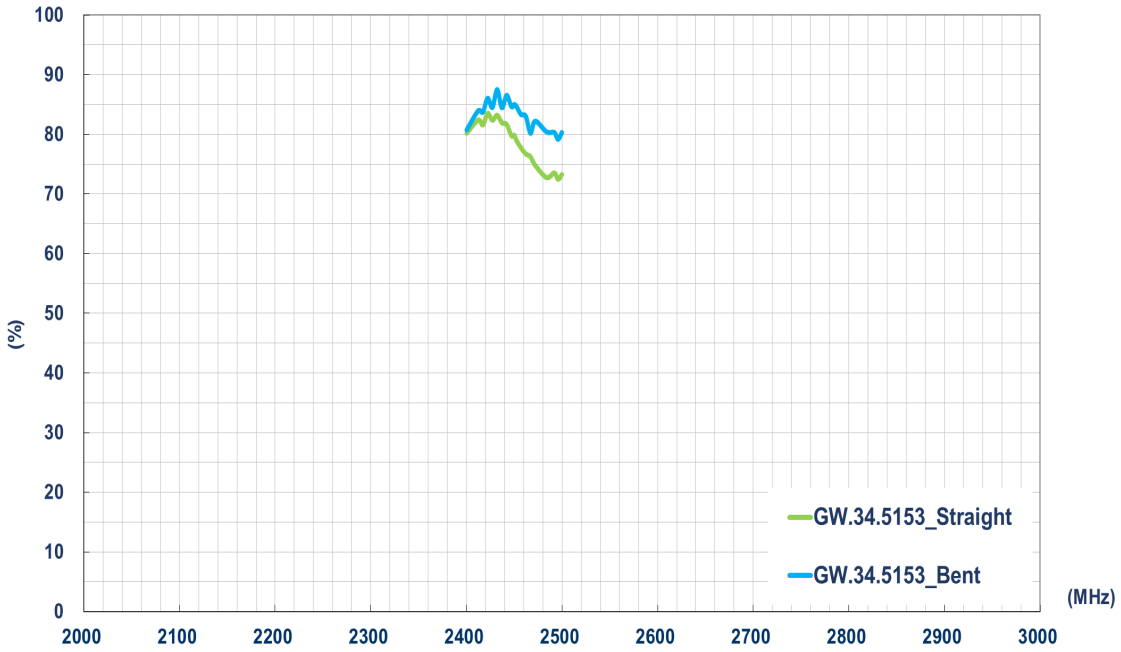

## 3.3 Average Gain

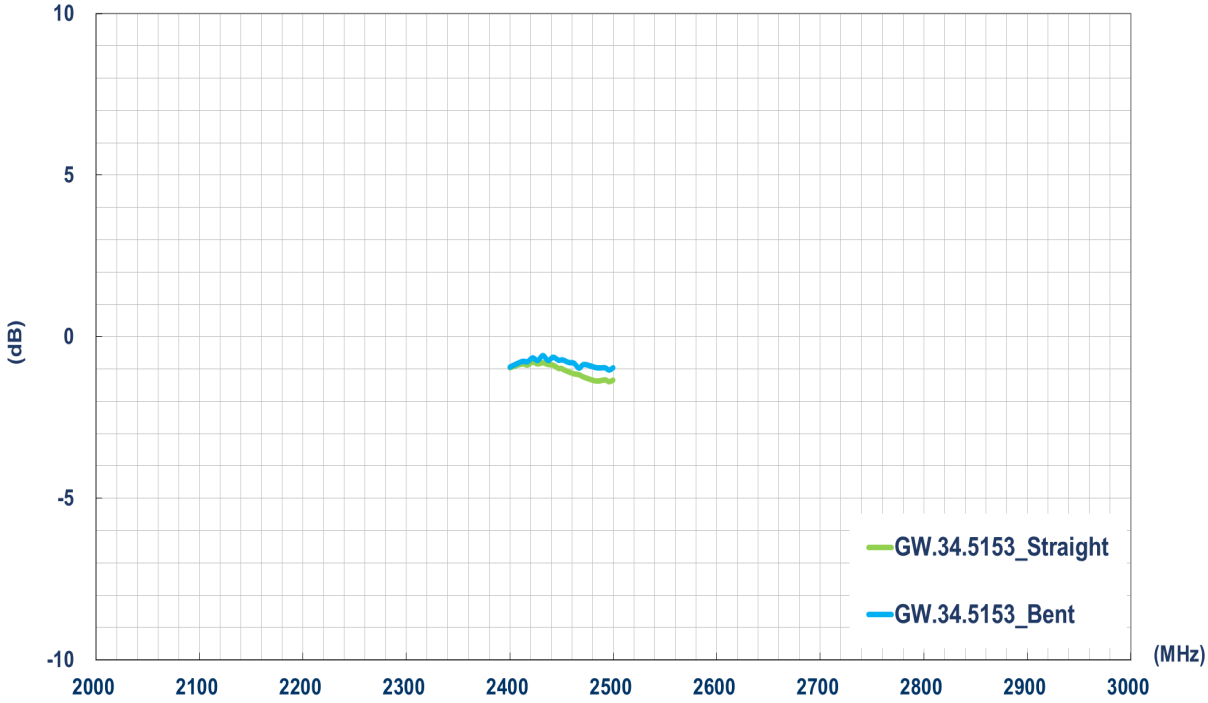


## 3.4 Peak Gain

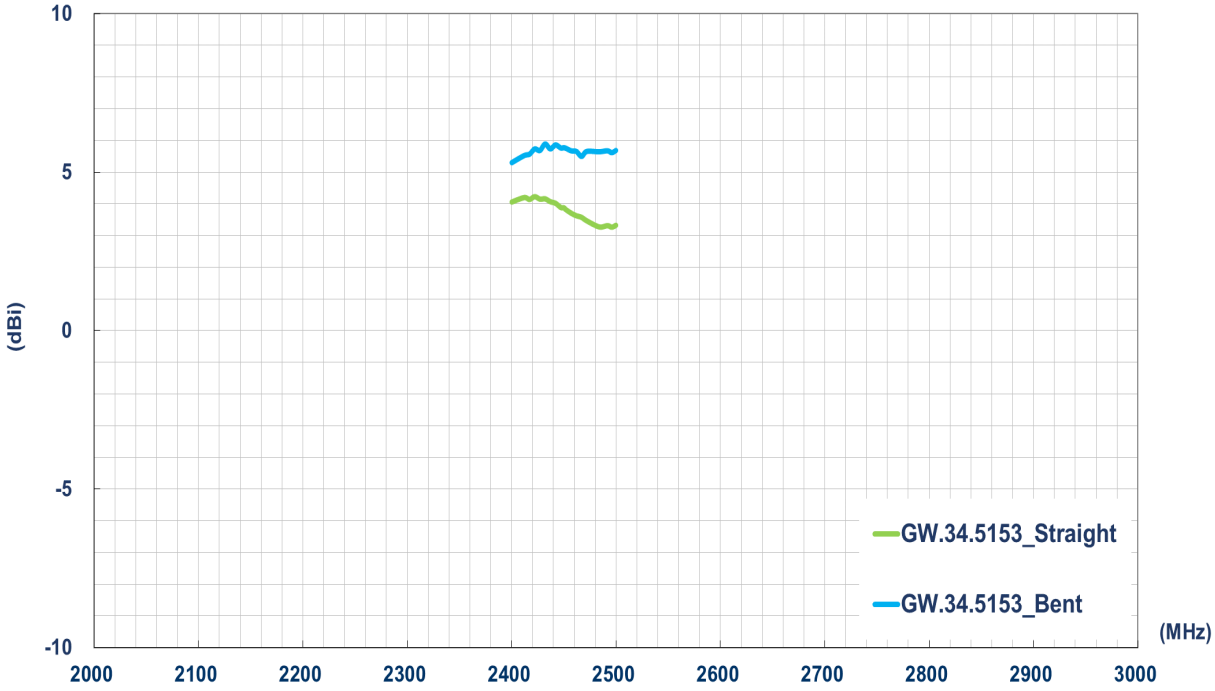

# 4. Radiation Patterns

## 4.1 Test Setup

Free space - Straight

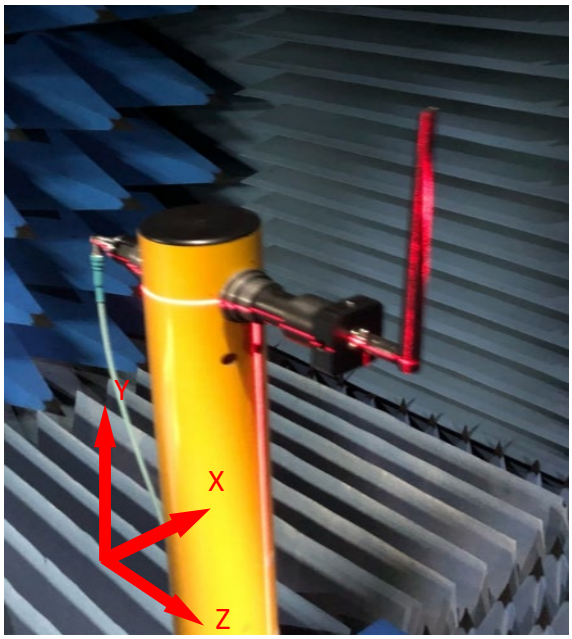


Free space - Bent

## 4.2 2450MHz 3D and 2D Radiation Patterns - Straight

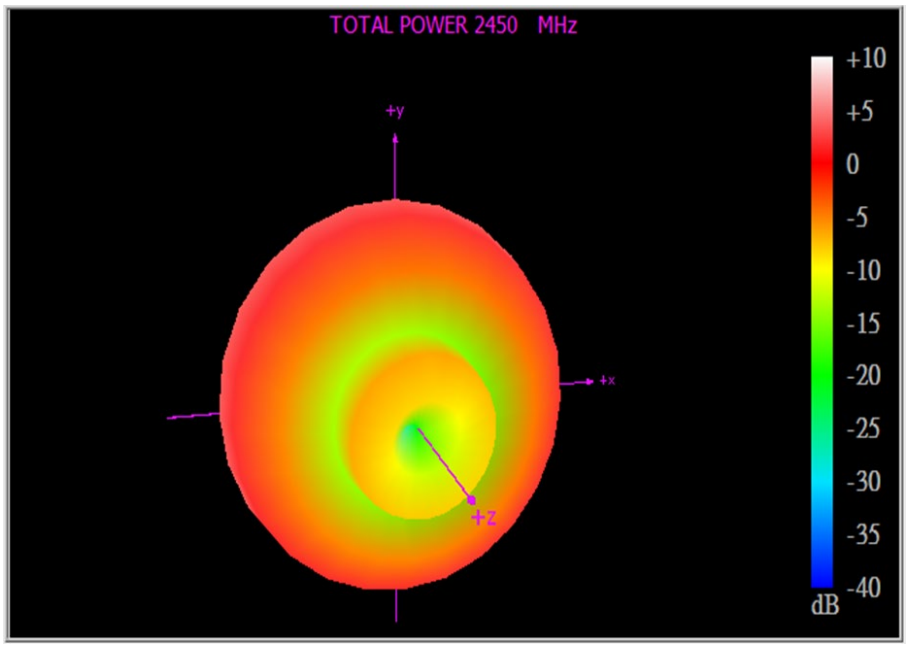


| XY Plane | XZ Plane | YZ Plane |
|---|---|---|
| 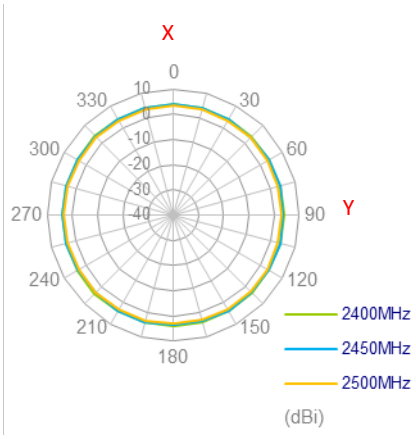 | 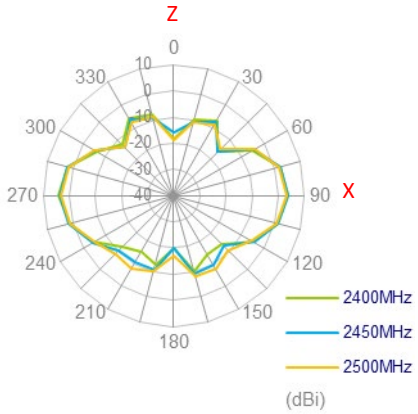 | 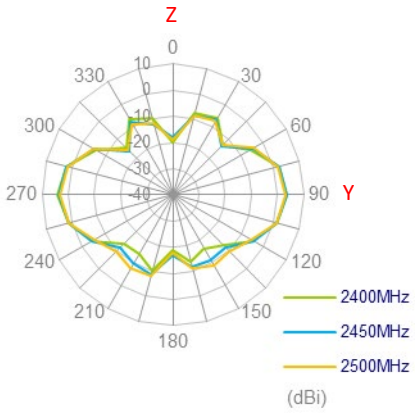 |

## 4.3 2450MHz 3D and 2D Radiation Patterns - Bent

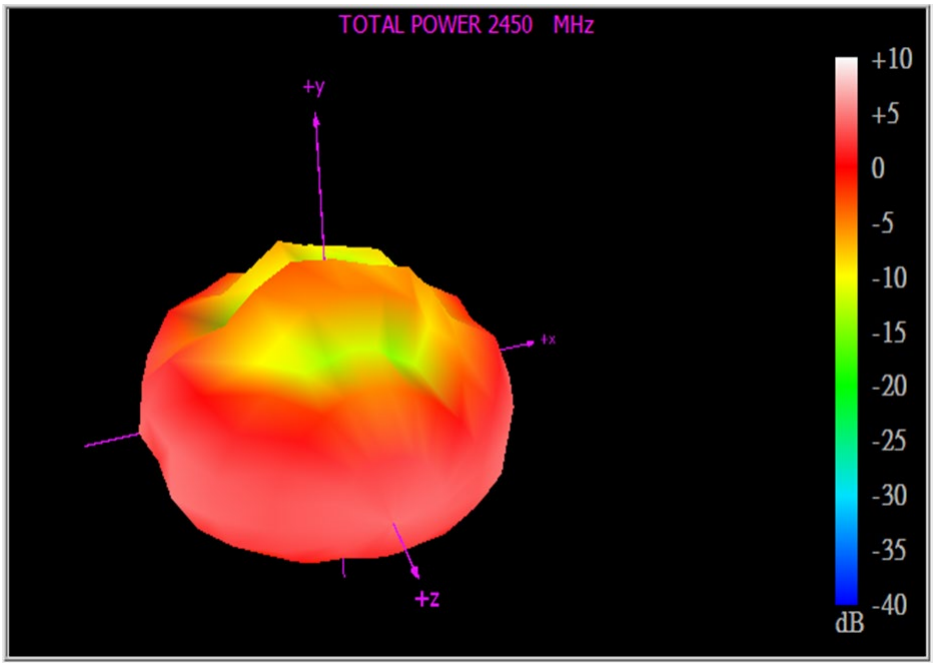


| XY Plane | XZ Plane | YZ Plane |
|---|---|---|

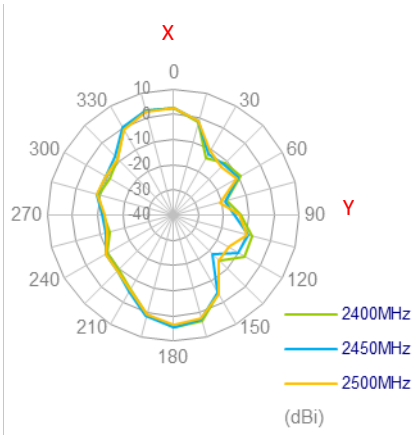


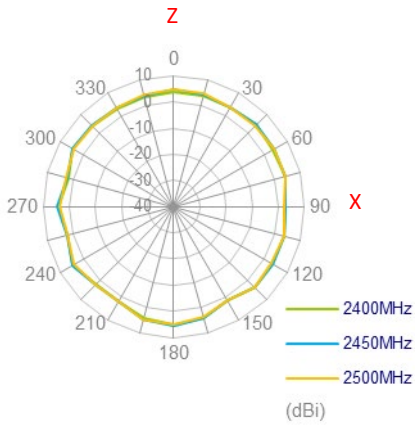


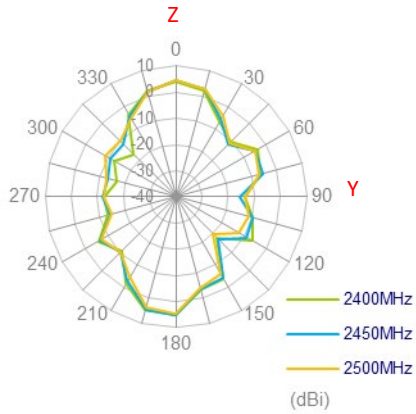

# 5. Mechanical Drawing (Units: mm)

ISO NO: EDW-19-8-0592

<Release>

| REV | ZONE | DESCRIPTION | ENG | APPROVED | ISSUED DATE |
|---|---|---|---|---|---|
| D01 | ALL | Initial Design | Rachel | Sky | 2019/05/09 |

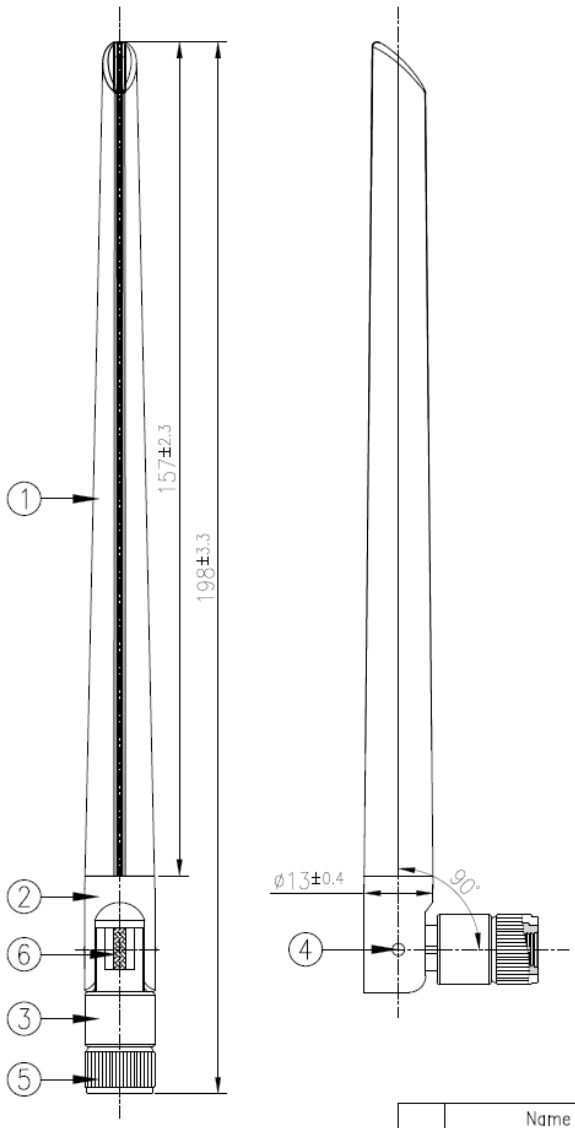


| | Name | P/N | Material | Finish | QTY |
|---|---|---|---|---|---|
| 1 | Antenna Cap | 000118H120000A | TPEE | Black | 1 |
| 2 | Upper Base | 001719E000000A | PBT+PC | Black | 1 |
| 3 | Bottem Base | 001719E000000A | PBT+PC | Black | 2 |
| 4 | Rivet | 001719E000000A | PBT+PC | Black | 2 |
| 5 | RP-SMA(M) | 001719E000000A | Brass | Au Plated | 1 |
| 6 | RG178 Coaxial Cable | 001719E000000A | FEP | Brown | 1 |

UNLESS OTHERWISE SPECFIED TOLERANCES ON:
.X± 0.2
XX.± 0.5 .XX± 0.1
X.± 0.3 .XXX± 0.05

DATE: 2019/05/09 | MAT'L:
UNIT: mm | FINISH:
THIRD ANGLE PROJECTION | SCALE: 1/1.25

APPROVED BY: Sky | CHECKED BY: Barry | DRAWN BY: Rachel | CUSTOMERS SIGNATURE / DATE

TAOGLAS. TW Design Centre
This drawing and its inherent design concepts are property of Taoglas. Not to be copied or given to third parties without the written consent of Taoglas.

REV D01

TITLE. : 5dBi 2.4GHz Dipole Antenna RP-SMA(M) Hinged

PART NO. : GW.34.5153

# 6. Packaging

1pc GW.34.5153 per PE Bag
Bag Dimension: 245*30mm
Weight: 22.5g

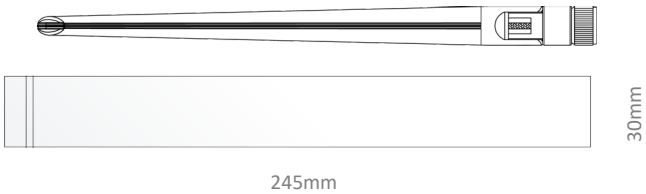


40pcs GW.34.5153 per Large PE Bag
Bag Dimensions: 320*205mm
Weight: 0.9Kg

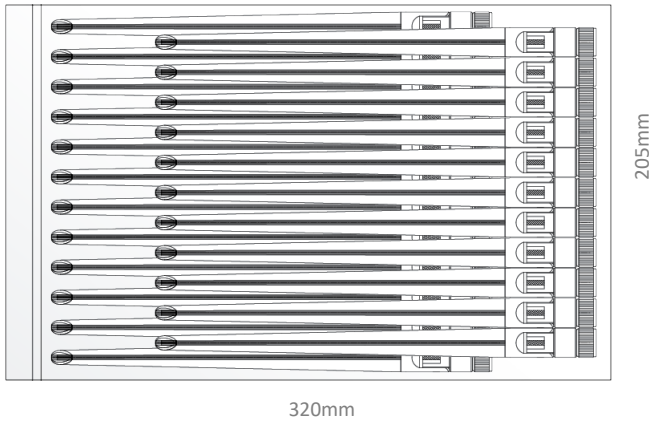


400pcs GW.34.5153 per Carton
Dimensions: 320*250*230mm
Weight: 10Kg

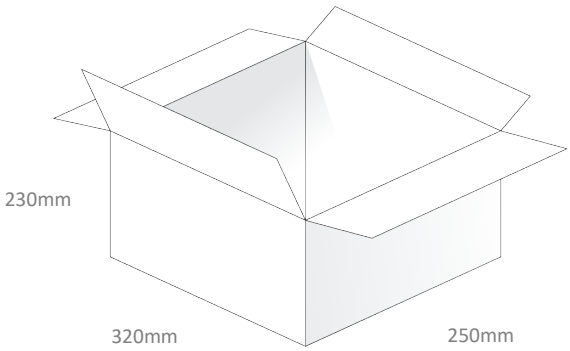


Pallet Dimensions:
1200*1000*1350mm
60 Cartons Per Pallet
12 Cartons Per Layer, 5 Layers

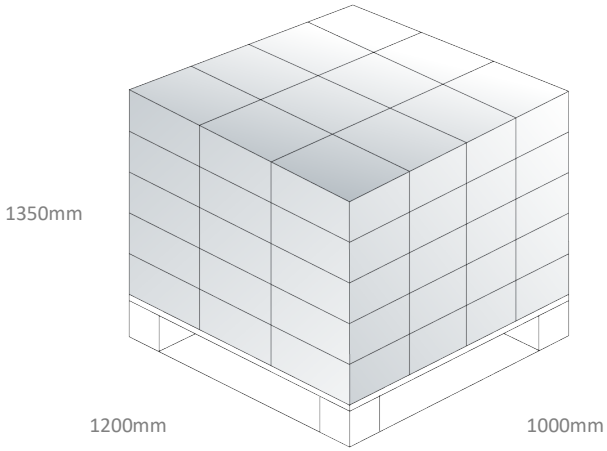

Changelog for the datasheet

## SPE-17-8-042 - OMB.868.B12F21

| Revision: A (Original First Release) | |
|---|---|
| Date: | 2019-06-24 |
| Notes: | |
| Author: | Jack Conroy |

**Previous Revisions**

TAOGLAS®

www.taoglas.com

© Taoglas