TSCINBUNY

SMART ROBOT PROGRAMMING LEARNING

Manual & Tutorial

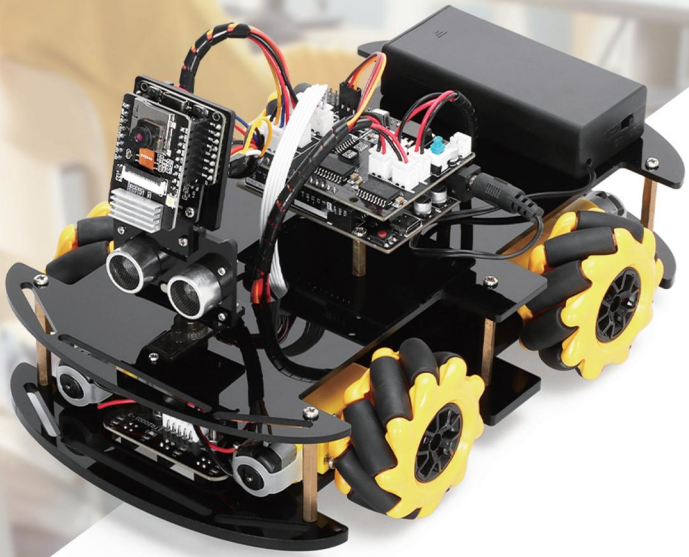

资料下载

可通过扫码或者
查询下方网址下载资料

http://www.zhiyi.ltd/xiazai/ZYC0076.rar

注意：此处为中文教程，旁边为英文教程，按需下载！

Note: Here is the Chinese tutorial, if you need to download the English tutorial, please download the English tutorial next to it!

Download Instructions

Select "ZYC0076-EN"

Scan the QR code and go to our Dropbox to select and download the desired tutorial.

robot@zhiyi.ltd

If you have more questions, please feel free to contact us via email!

产品零件/Product Parts

M1.6*10圆头螺丝*4
(M1.6*10 round head screws*4)

M1.6螺母*4
(M1.6 nuts*4)

M2*10圆头螺丝*6
(M2*10 round head screws*6)

M2螺母*6
(M2 nuts*6)

M2.5*20圆头螺丝*4
(M2.5*20 round head screws*4)

M3*8圆头螺丝*28
(M3*8 round head screws*28)

M3*10平头螺丝*4
(M3*10 flat head screws*4)

M3*16圆头螺丝*2
(M3*16 round head screws*2)

M3*30圆头螺丝*8
(M3*30 round head screws*8)

产品零件/Product Parts

M3螺母*16
(M3 nuts*16)

M3*15铜柱*4
(M3*15 copper pillar*4)

M3*40铜柱*6
(M3*40 copper pillar*6)

电机支架*4
(Motor bracket*4)

十字螺丝刀
(Phillips screwdriver)

一字螺丝刀
(Slotted screwdriver)

4P-1P连接线 20cm
(4P-1P connection cable 20cm)

4P连接线 20cm
(4P connection cable 20cm)

5P连接线 20cm
(5P connection cable 20cm)

产品零件/Product Parts

开发板
(Development Board)

扩展板
(Expansion Board)

ESP32-CAM板
(ESP32-CAM Board)

ESP32扩展板
(ESP32 Expansion Board)

超声波模块
(Ultrasound Module)

寻迹模块
(Tracking Module)

舵机
(Servo)

电机*4
(Motor*4)

电池盒
(Battery Box)

产品零件/Product Parts

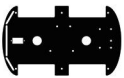

亚克力顶板
(Acrylic top plate)

ESP32扩展板支架
(ESP32 Expansion board bracket)

超声波模块支架
(Ultrasonic module bracket)

亚克力底板
(Acrylic base plate)

轮子和联轴器*4
(Wheel & coupling*4)

Type-C USB线
(Type-C USB Cable)

绕线管*2
(Winding tube*2)

安装寻迹模块
(Installation of the tracking module)

① M3*16圆头螺丝*2
(M3*16 round head screws*2)

② M3螺母*4
(M3 nuts*4)

③ 5P连接线 20cm
(5P connection cable 20cm)

④ 亚克力底板
(Acrylic base plate)

⑤ 寻迹模块
(Tracking Module)

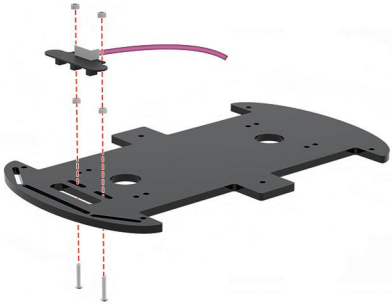

按照图片所示，将寻迹模块固定在亚克力底板上，
并把5P连接线插在寻迹模块上。
注意：模块和底板之间需要增加两个螺母。

Secure the tracking module to the acrylic base plate as shown in the picture and plug the 5P connection cable into the tracking module.
Note: Two additional nuts are required between the module and the base plate.

安装电机支架
Installation of motor brackets

① M3*8圆头螺丝*8
(M3*8 round head screws*8)

② 电机支架*4
(Motor bracket*4)

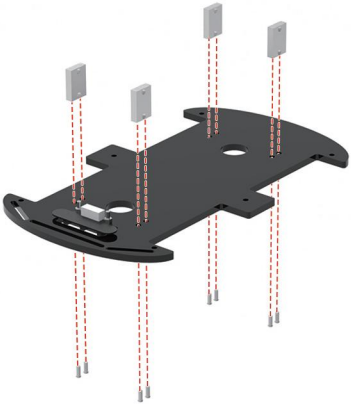

按照图片所示，将电机支架固定在亚克力底板上。
Attach the motor bracket to the acrylic base plate as shown in the pictures.

安装电机
(Installing the motor)

① M3*30圆头螺丝*8
(M3*30 round head screws*8)

② M3螺母*8
(M3 nuts*8)

③ 电机*4
(Motor*4)

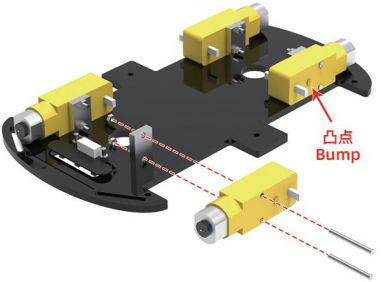

按照图片所示，将4个电机固定在电机支架上。
注意：4个电机有凸点的那面朝外。
Secure the 4 motors to the motor bracket as shown in the pictures.
Note: The side of the 4 motors with the bumps faces outward.

安装铜柱
(Installation of the copper pillar)

① M3*8圆头螺丝*6
(M3*8 round head screws*6)

② M3*40铜柱*6
(M3*40 copper pillar*6)

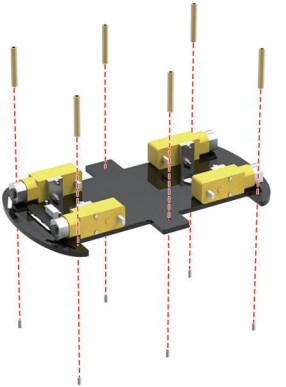

按照图片所示，将铜柱固定在亚克力底板上。
Attach the copper pillar to the acrylic base plate as shown in the picture.

安装轮子
(Installation of wheels)

① 轮子和联轴器*4
(Wheel & coupling*4)

② M2.5*20圆头螺丝*4
(M2.5*20 round head screws*4)

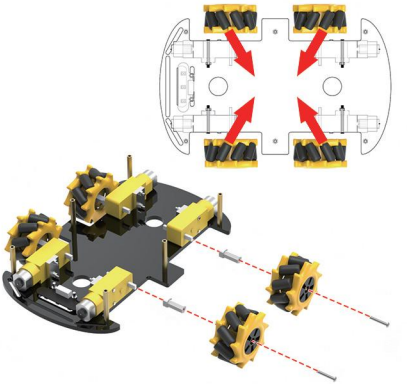

按照图片所示，先将联轴器固定电机上，再把轮子固定在联轴器上。
注意轮子的摆放。
Secure the coupling to the motor as shown in the picture, then secure the wheel to the coupling.
Note the wheel placement.

安装舵机
(Installing the servo)

① M2*10圆头螺丝*2
(M2*10 round head screws*2)

② M2螺母*2
(M2 nuts*2)

③ 舵机
(Servo)

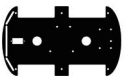

④ 亚克力顶板
(Acrylic top plate)

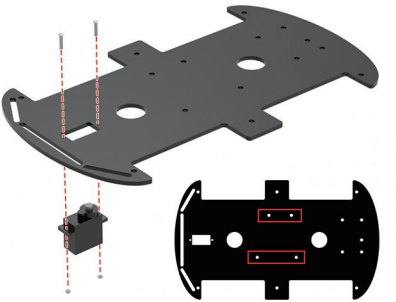

这一面需要朝上
This side faces up

按照图片所示，将舵机固定在亚克力顶板的下方。
注意亚克力顶板的正反面。
Attach the servo to the underside of the acrylic top plate as shown in the pictures.
Note the front and back of the acrylic top plate.

安装铜柱
(Install the copper pillar)

① M3*8圆头螺丝*4
(M3*8 round head screws*4)

② M3*15铜柱*4
(M3*15 copper pillar*4)

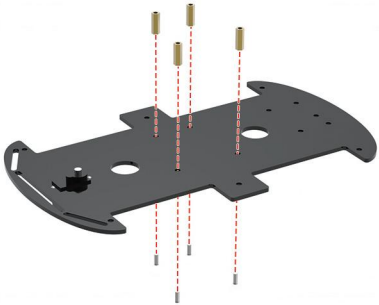

按照图片所示，将铜柱固定在亚克力顶板上。
Secure the copper pillar to the acrylic top plate as shown in the picture.

安装开发板和扩展板
(Install the development board & expansion board)

① M3*8圆头螺丝*4
(M3*8 round head screws*4)

② 开发板
(Development Board)

③ 扩展板
(Expansion Board)

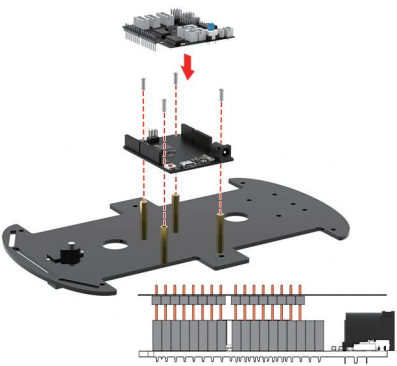

按照图片所示，先将开发板固定在铜柱上，再把扩展板插在开发板上。
注意：不要把板子的引脚插错。
Secure the development board to the copper pillar as shown in the picture, and then plug the expansion board into the development board.
Note: Don't plug the board's pins in the wrong way.

安装电池盒
(Installing the Battery Box)

① M3*10平头螺丝*4
(M3*10 flat head screws*4)

② M3螺母*4
(M3 nuts*4)

③ 电池盒
(Battery Box)

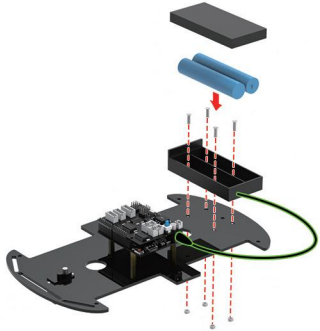

首先把电池盒固定在亚克力顶板上，接着对准电池的正负极并放入电池盒中，最后把电源线插在开发板上。
注意：该产品不包含电池，需自备2节3.7V 18650电池。

First, fix the battery box on the acrylic top plate, then align the positive and negative terminals of batteries and put them into the battery box, and finally plug the power cord into the development board.
Note: The product does not include batteries, you are advised to prepare two 3.7V 18650 batteries yourself.

组装超声波模块支架和舵机臂
(Assembling the ultrasonic module bracket and servo arm)

① 舵机自带的尖头螺丝*2
(Tip screws that come with the servo*2)

② 舵机臂*1
(Servo arm*1)

③ 超声波模块支架
(Ultrasonic module bracket)

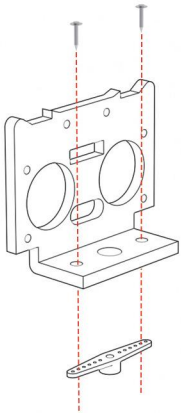

按照图片所示，将超声波模块支架固定在舵机臂上。

Attach the ultrasonic module bracket to the servo arm as shown in the picture.

安装ESP32扩展板支架
(Installation of ESP32 expansion board bracket)

① M2*10圆头螺丝*2
(M2*10 round head screws*2)

② M2螺母*2
(M2 nuts*2)

③ ESP32扩展板支架
(ESP32 Expansion board bracket)

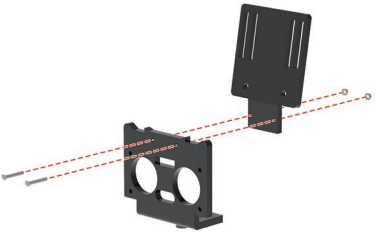

按照图片所示，将ESP32扩展板支架固定在超声波模块支架上。
Attach the ESP32 expansion board bracket to the ultrasonic module bracket as shown in the picture.

安装超声波模块
(Installation of ultrasonic module)

① M1.6*10圆头螺丝*4
(M1.6*10 round head screws*4)

② M1.6螺母*4
(M1.6 nuts*4)

③ 超声波模块
(Ultrasonic module)

将超声波模块固定在超声波模块支架上。
Secure the ultrasonic module to the ultrasonic module bracket.

组装EPS32-CAM和ESP32扩展板
(Assembling the EPS32-CAM and ESP32 Expansion Boards)

① M2*10圆头螺丝*2
(M2*10 round head screws*2)

② M2螺母*2
(M2 nuts*2)

③ ESP32-CAM板
(ESP32-CAM Board)

④ ESP32扩展板
(ESP32 Expansion Board)

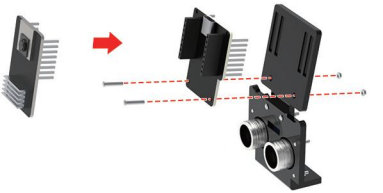

按照图片所示，先将ESP32扩展板固定在支架上，再把ESP32-CAM插在ESP32扩展板上。
Secure the ESP32 expansion board to the bracket as shown in the picture, then plug the ESP32-CAM into the ESP32 expansion board.

安装头部
(Installation head)

① 舵机自带的圆头螺丝*1
(Round head screws that come with the servo*1)

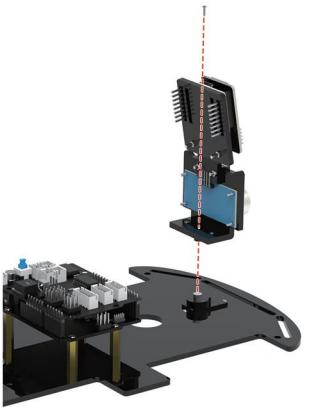

按照图片所示，将头部固定在舵机上。
Secure the head of the car to the servo as shown in the pictures.

组装整辆车
(Assemble the whole car)

① M3*8圆头螺丝*6
(M3*8 round head screws*6)

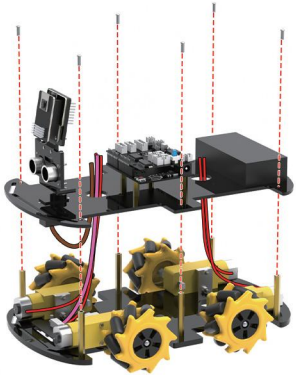

按照图片所示，先把底部的线穿过亚克力顶板的圆孔，接着再把亚克力顶板固定在铜柱上。
As shown in the picture, first pass the bottom wire through the round hole in the acrylic top plate, then secure the acrylic top plate to the copper pillar.

接线/Wiring

注意车头的朝向
Note the orientation of the front of the car.

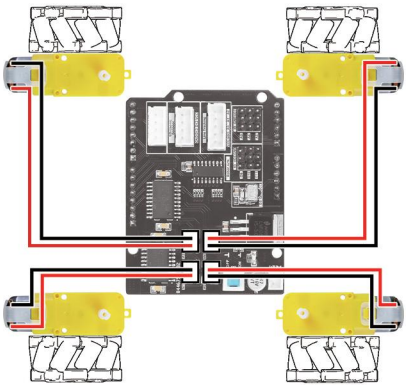

接线/Wiring

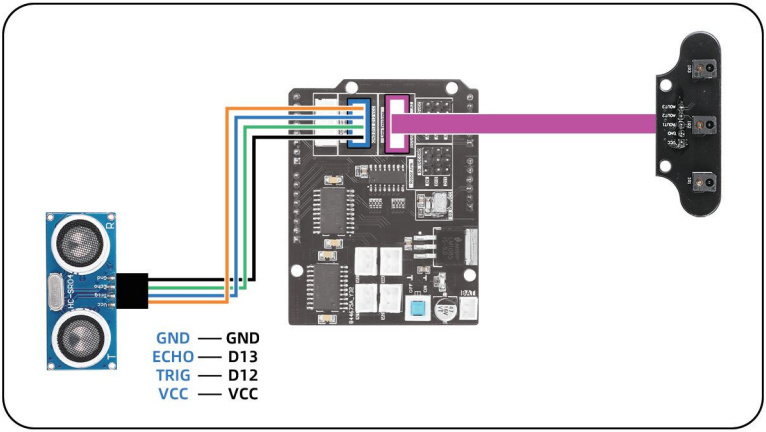

接线/Wiring

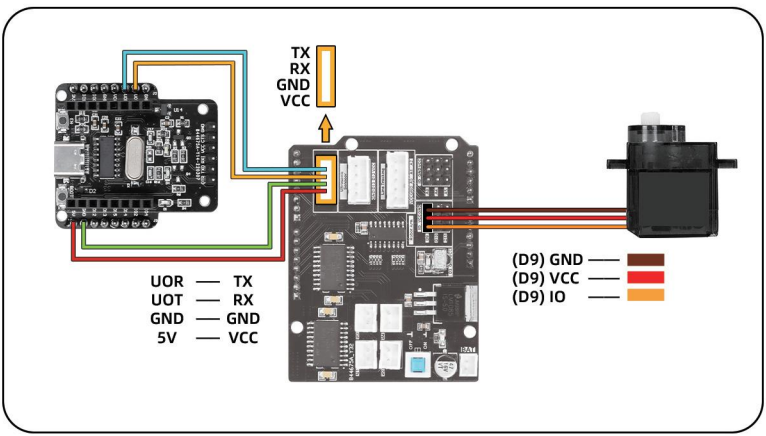

组装完成/Assembly completed

产品基本参数

工作电压：5v
输入电压：7-9V
最大输出电流：2A
最大功耗：25W (T=75℃)
电机转速：5v 200rpm /min
超声波感应角度：< 15度
超声波检测距离：2cm~400cm
手机遥控距离：10~50米
伺服电机角度范围：0~180°

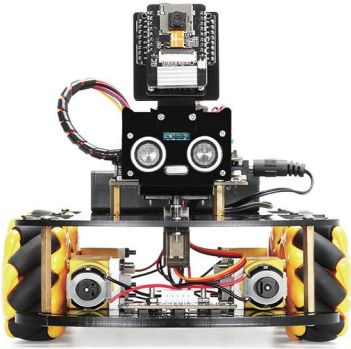

Basic Product Parameters

Working voltage: 5v
Input voltage: 7-9V
Maximum output current: 2A
Maximum power consumption: 25W (T=75℃)
Motor speed: 5v 200rpm /min
Ultrasonic sensing angle: < 15 degrees
Ultrasonic detection distance: 2cm~400cm
Control range of cell phone: 10~50 meters
Servo angle range: 0~180°

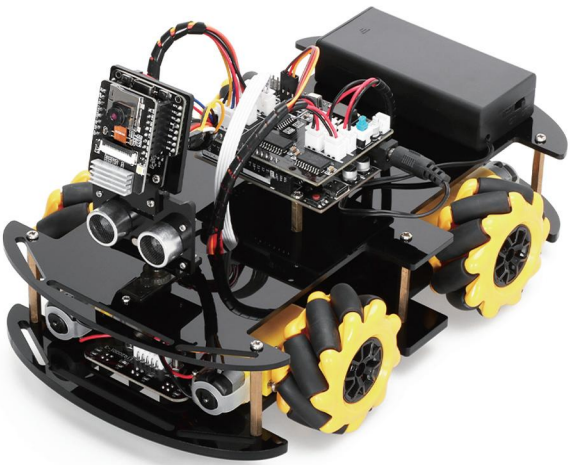

This device complies with Part 15 of the FCC Rules. Operation is subject to the following two conditions: (1) this device may not cause harmful interference, and (2) this device must accept any interference received, including interference that may cause undesired operation

NOTE: This equipment has been tested and found to comply with the limits for a Class B digital device, pursuant to Part 15 of the FCC Rules. These limits are designed to provide reasonable protection against harmful interference in a residential installation. This equipment generates, uses and can radiate radio frequency energy and, if not installed and used in accordance with the instructions, may cause harmful interference to radio communications. However, there is no guarantee that interference will not occur in a particular installation.
If this equipment does cause harmful interference to radio or television reception, which can be determined by turning the equipment off and on, the user is encouraged to try to correct the interference by one or more of the following measures:
-- Reorient or relocate the receiving antenna.
-- Increase the separation between the equipment and receiver.
-- Connect the equipment into an outlet on a circuit different from that to which the receiver is connected.
-- Consult the dealer or an experienced radio/TV technician for help.

Warning: changes or modifications not expressly approved by the party responsible for compliance could void the user's authority to operate the equipment

Radiation Exposure Statement
This equipment complies with FCC radiation exposure limits set forth for an uncontrolled environment.
This equipment should be installed and operated with minimum distance 20cm between the radiator and your body.

TSCINBUNY