02 Series Instr uction
02 シリーズ取扱説明書

ON
OFF

SPECIFICATIONS

Different Types Installation Videos	
Item Series	HC-02, HC-02Y, HC-02D
Material	Aluminum
Network	Bluetooth
Unlocking Way	Fingerprint+Tuya app+Key
Unlocking Efficiency	≈1.5 seconds
Battery	Built-in 3.7V rechargeable battery
Emergency Power Supply	USB Charge
Fingerprint Capacity	40 pcs
Finishing	Black, Silver
Alarm	Low battery alarm
Certificate	CE, FCC, RoHS
02Y & 02D Suitable Door Thickness	Slider: 24-42mm Latch: 24-25.5mm, 30-31.5mm, 35-36mm, 36-40mm
02 Suitable Door Thickness	Slider: 37-56mm Latch: 37-39mm, 44-45mm, 48-50mm, 53-54mm
Application	Sliding door, wooden door and aluminum door

APP SETTING

Search Tuya Smart in app store or scan the QR code, register an account and login.

Step 1: Turn on Bluetooth

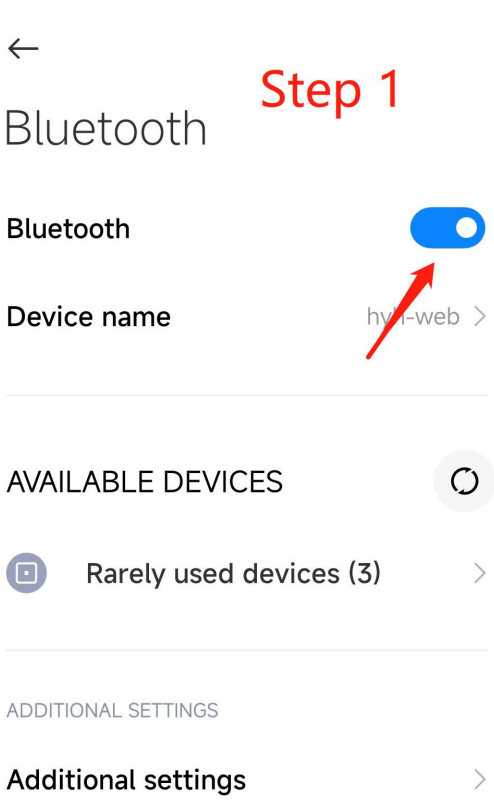

Step 2: Open Tuya, touch the fingerprint to active the lock and choose add device

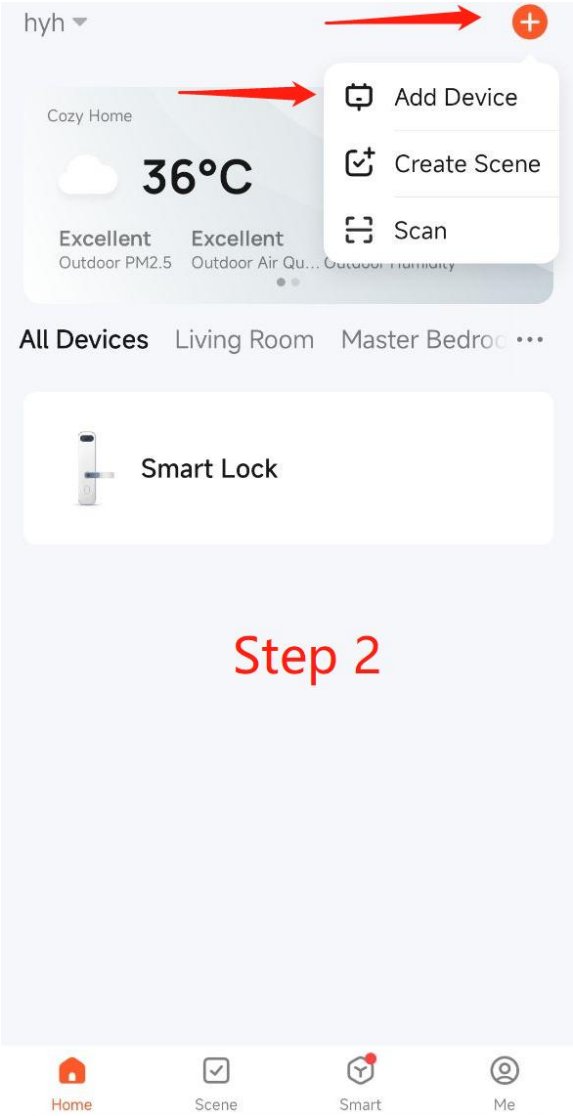

Step 3: Add device

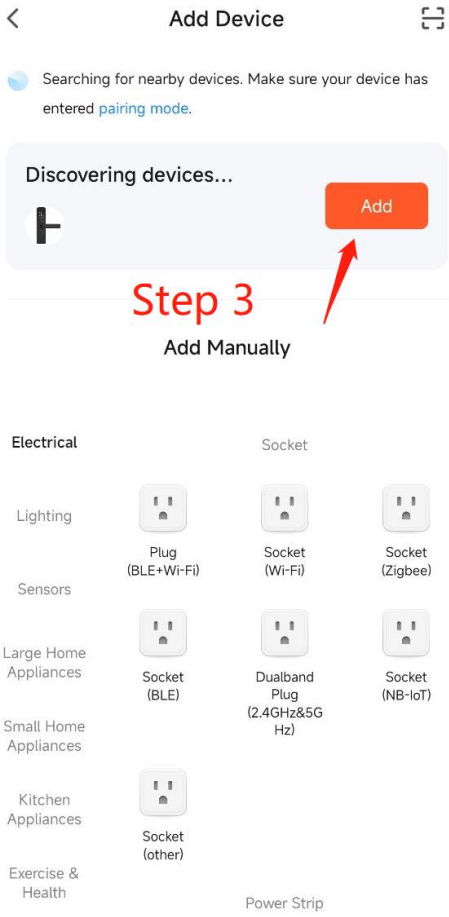

Step 4: Choose done

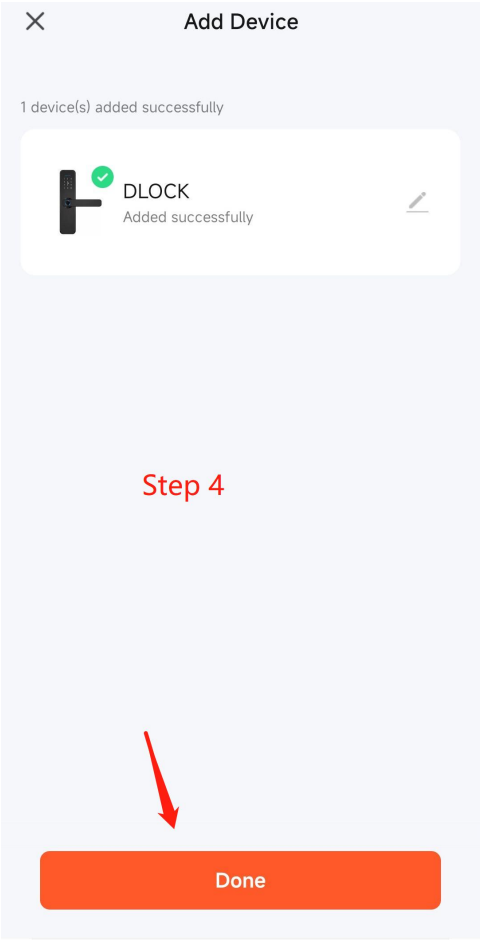

Step 5: Add device successfully

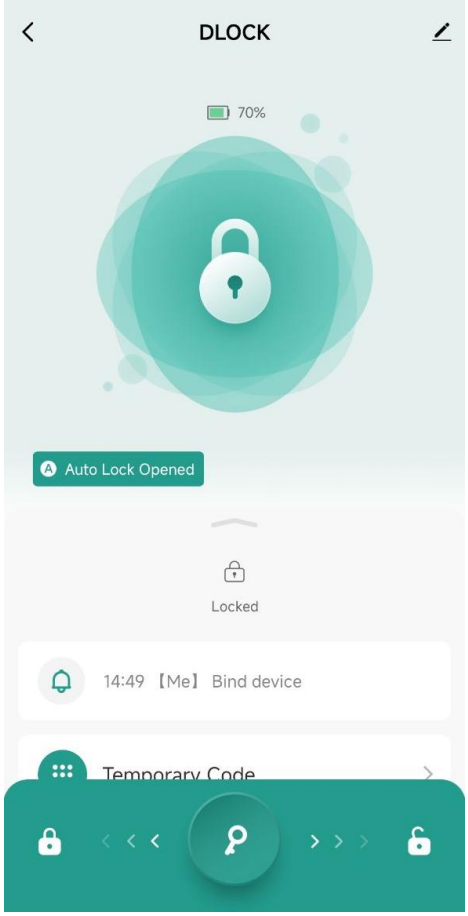

RESET

Step 1: Click the icon

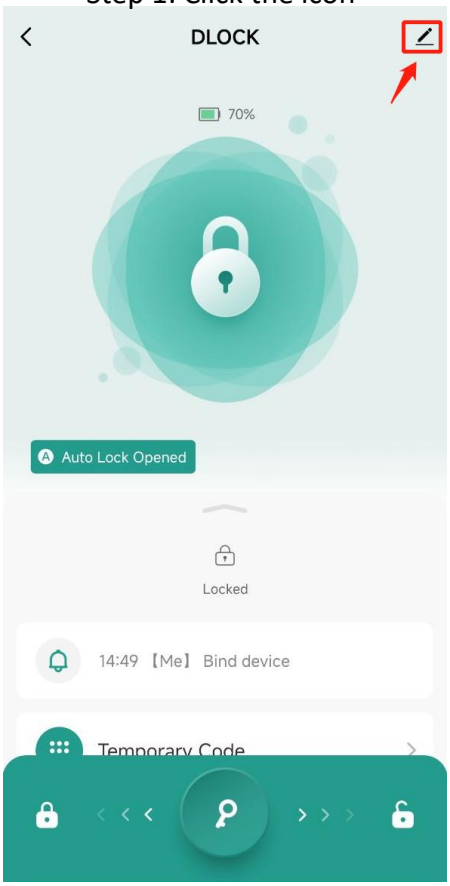

Step 2: Choose remove device

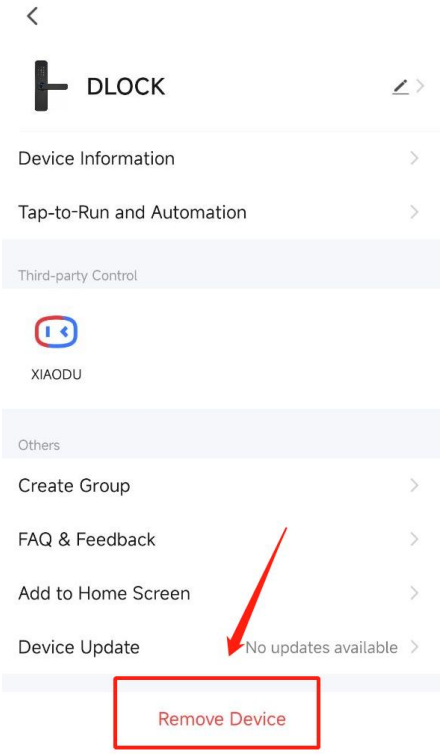

Step 3: Choose disconnect and wipe data

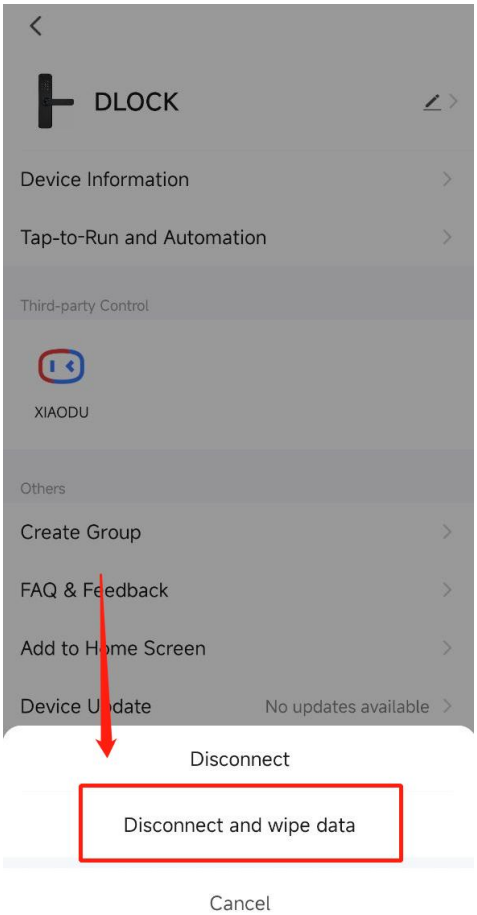

Step 4: Confirm

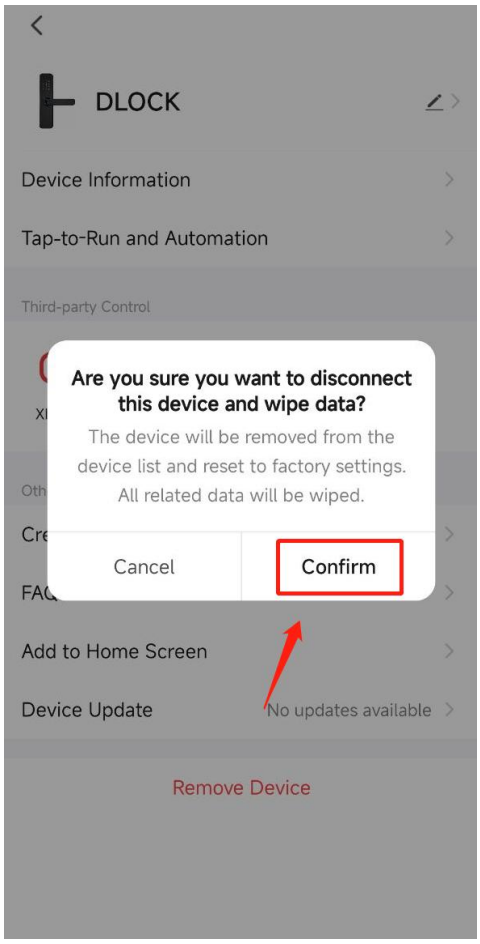

仕様

異なるタイプのインストレーション･ビデオ	
商品コード	HC-02, HC-02Y, HC-02D
材質	アルミニウム
ネットワーク	Bluetooth（ブルートゥース）対応
ロック解除の方法	指紋認証、Tuya アプリ、鍵
効率性を解き放つ	≈1.5 秒
電池	3.7V 充電池内蔵
緊急電源	USB 充電
指紋容量	40 枚
カラー	黒、銀
警報	低バッテリーアラーム
証明書	CE, FCC, RoHS
02Y & 02D 適切なドア厚	スライダー: 24-42mm ラッチ: 24-25.5mm, 30-31.5mm, 35-36mm, 36-40mm
02 適切なドア厚	スライダー: 37-56mm ラッチ: 37-39mm, 44-45mm, 48-50mm, 53-54mm
申し込み	引き戸、木製ドア、アルミ製ドア

アプリ設定

アプリストアで Tuya Smart を検索するか、QR コードをスキャンしてアカウントを登録し、ログインします。

ステップ 1: Bluetooth をオンにする

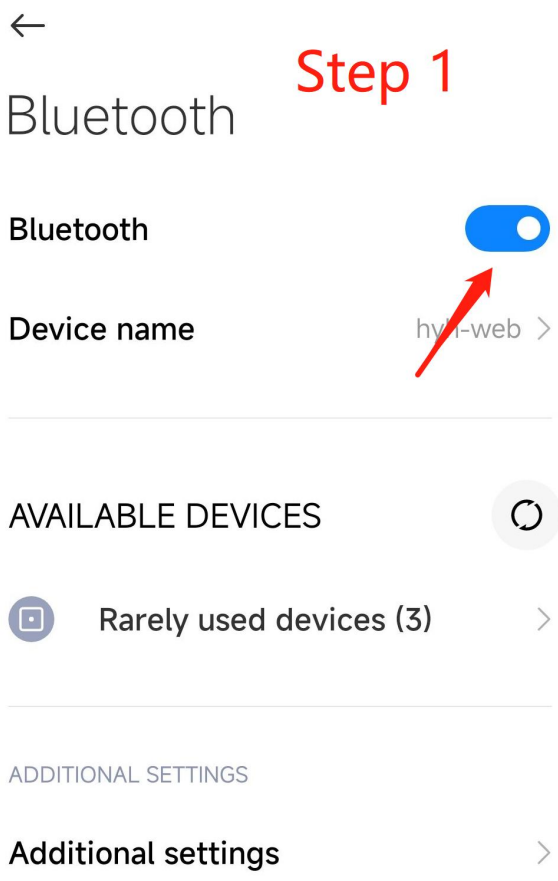

ステップ 2: Tuya を開き、指紋をタッチしてロックを有効にし、デバイスの追加を選択する。

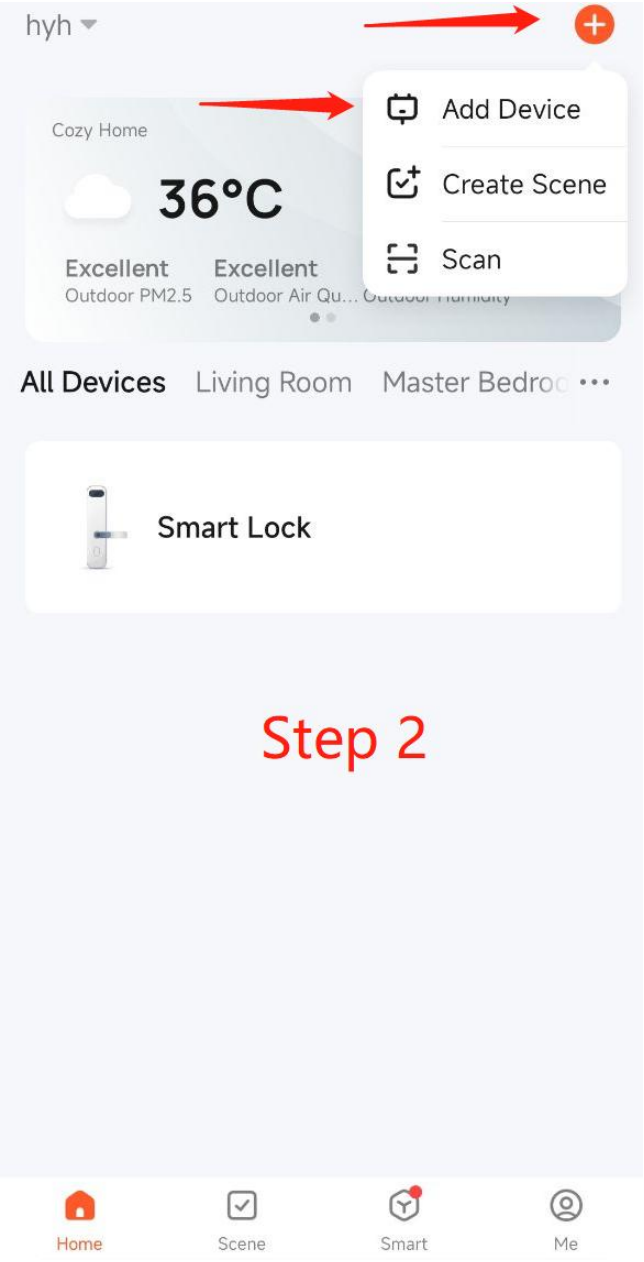

ステップ 3: デバイスの追加

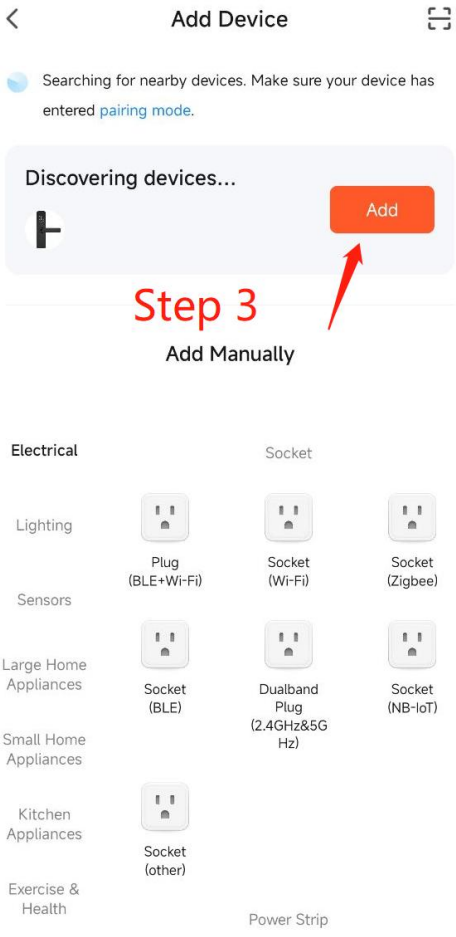

ステップ 4: 完了を選ぶ

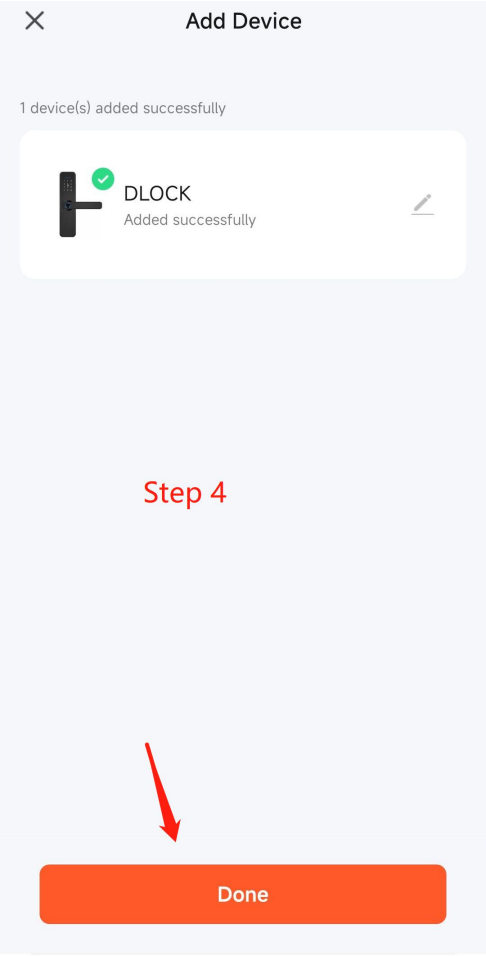

ステップ 5: デバイスの追加に成功

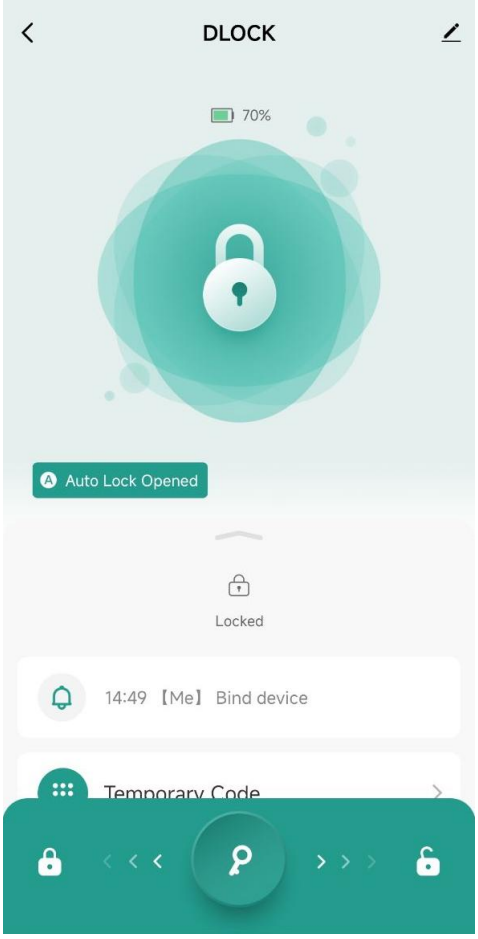

初期化

ステップ 1：アイコンをクリック

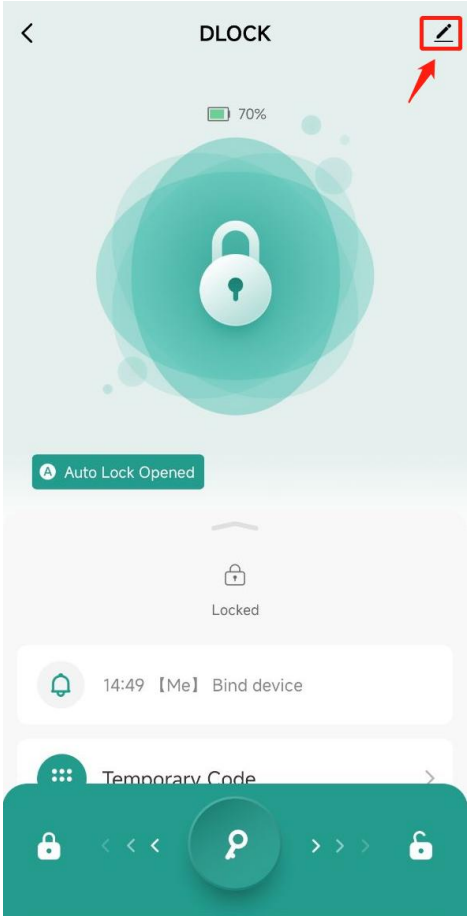

ステップ 2：デバイスの削除を選択

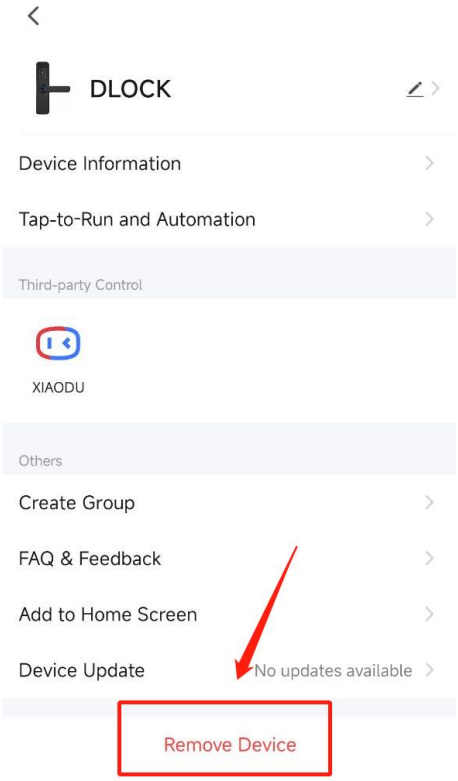

ステップ 3：切断とデータ消去を選択する

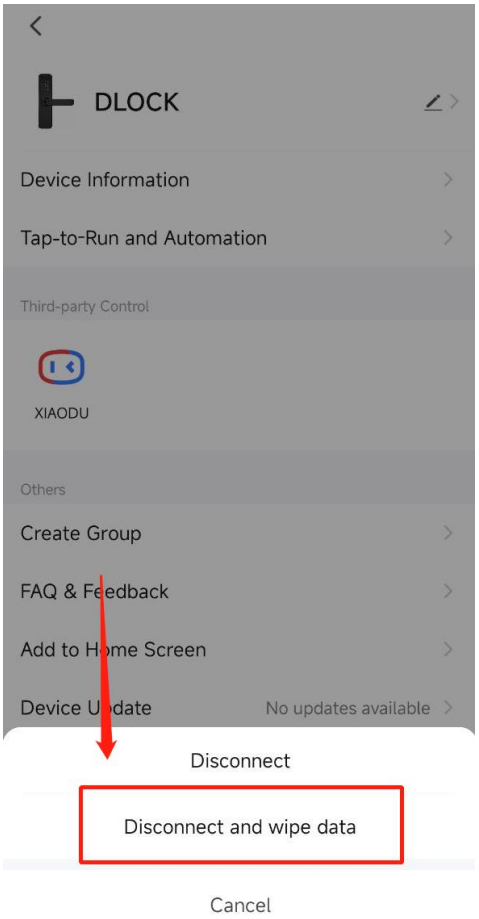

ステップ 4：確認

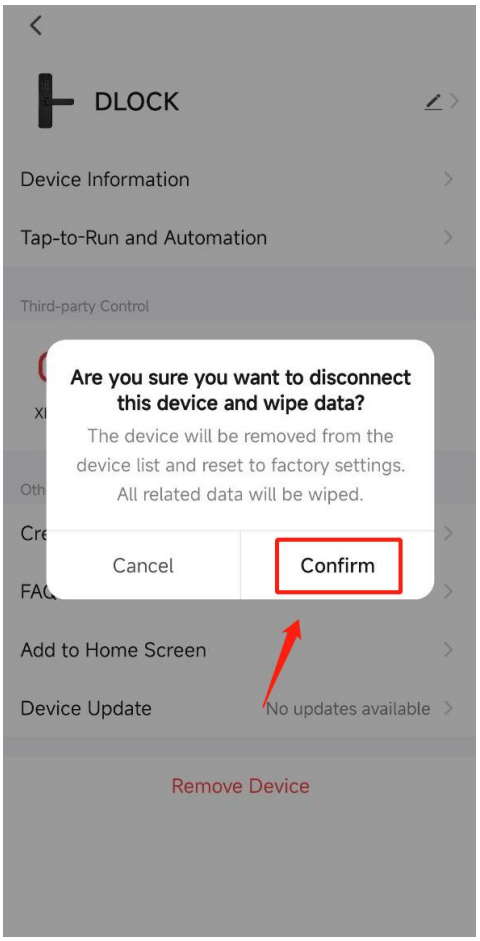

1 Accessories

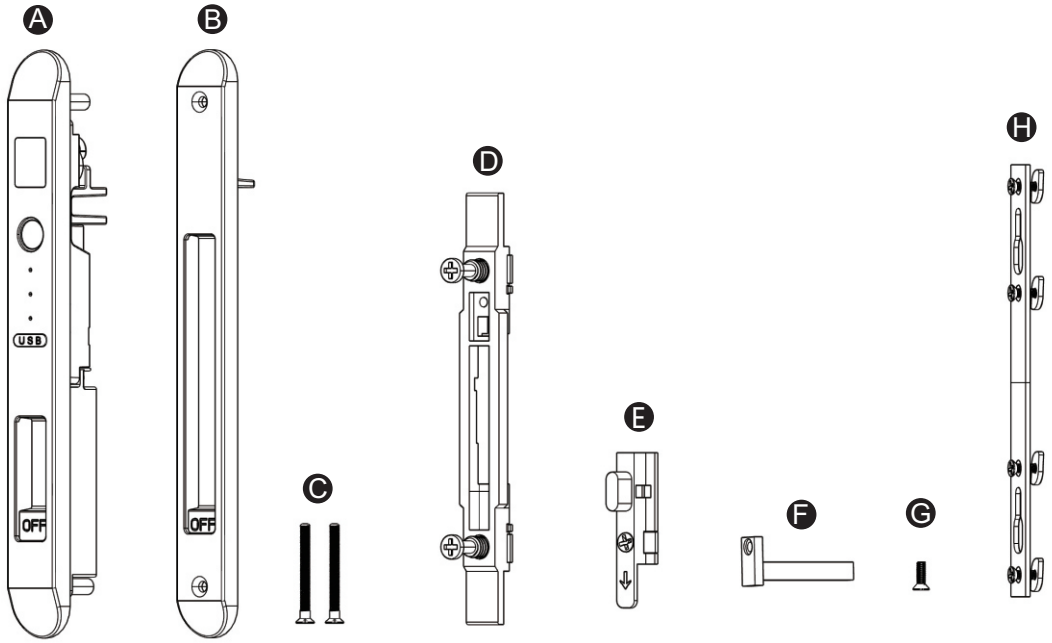

2 Before installation

Door type: Special profiles

Important: grooves

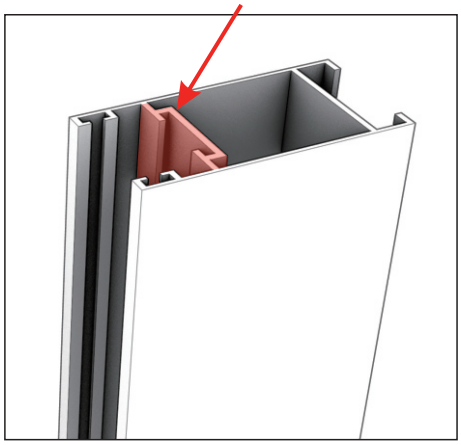

Reserve a location for installing smart locks

① Measure the size of door hole.

② Drill the door hole will tool.

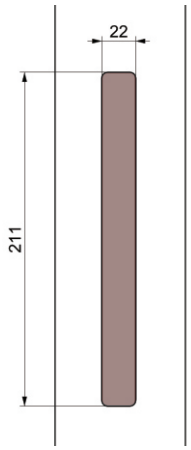

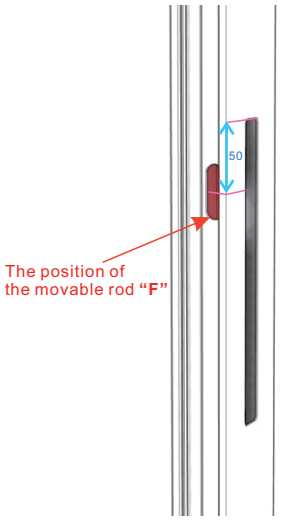

3 Install smart lock

① Fix the front and rear panels to the aluminum material with screws

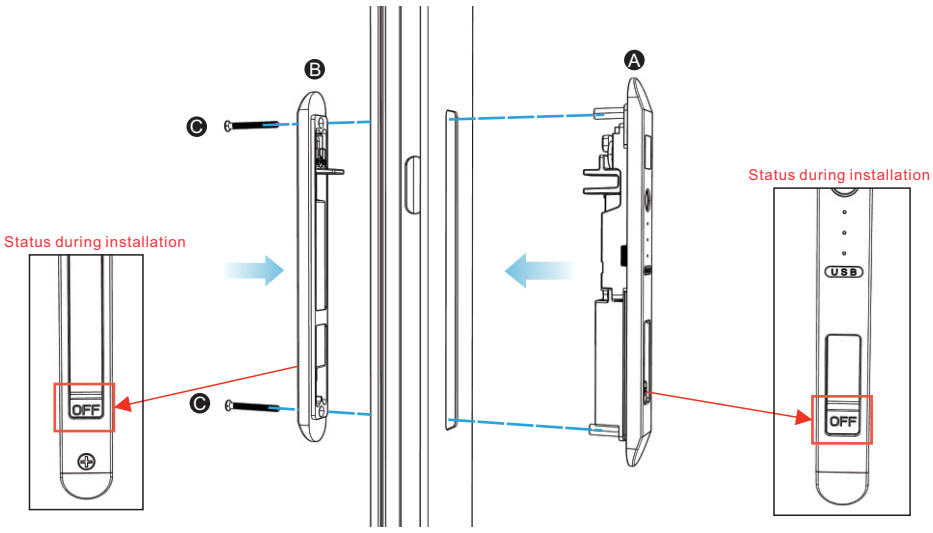

Ensure that the rear panel fork is at the top

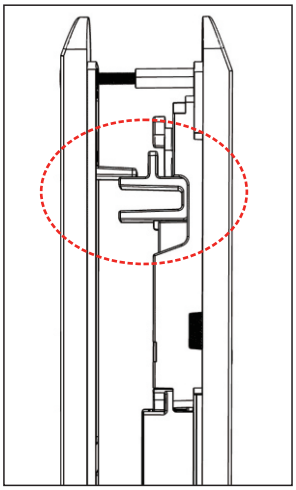

4 Install locking device

① Place **"E"** in **"D"**

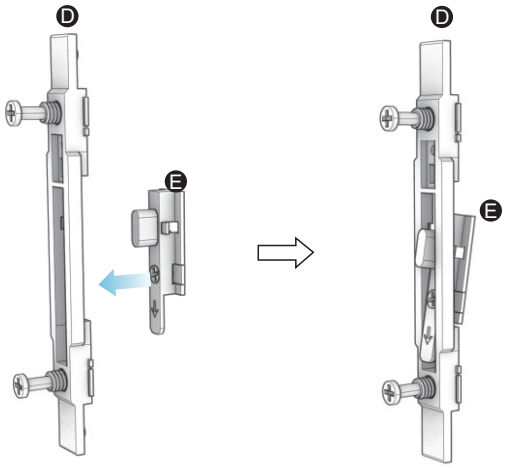

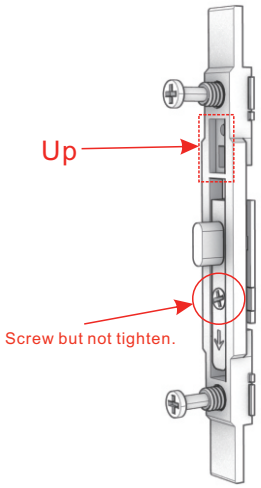

② Insert the locking device into the groove

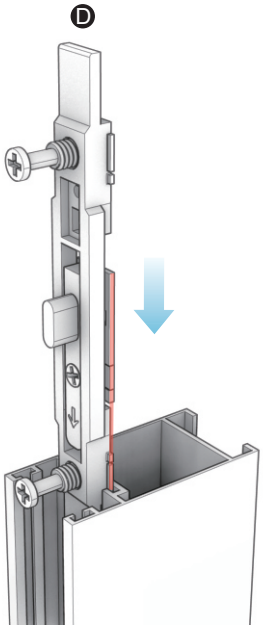

③ Slide **"D"** down to the appropriate position where **"F"** can be put in the right place like ④

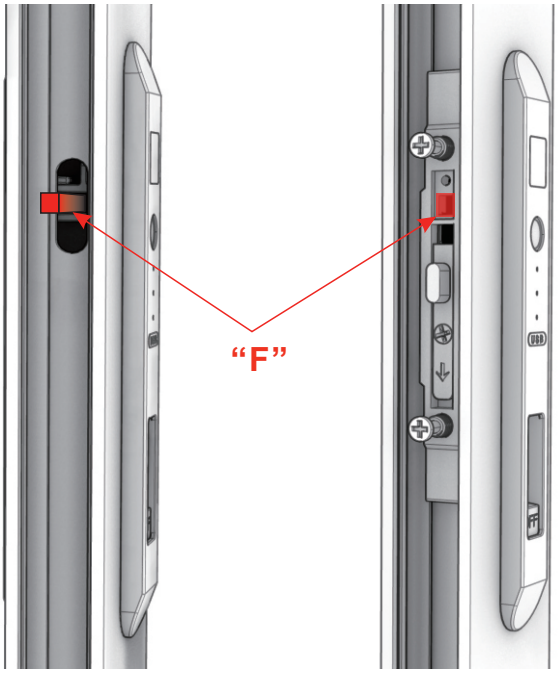

④ Install **"F"**

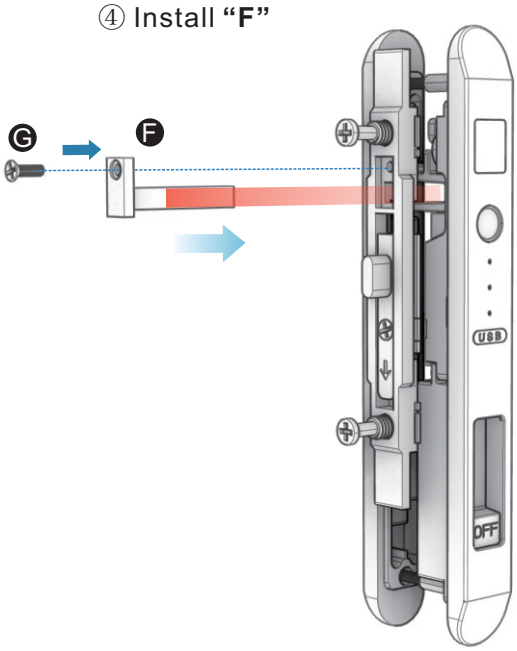

⑤ Press the rear panel switch so accessory **"E"** leans upwards

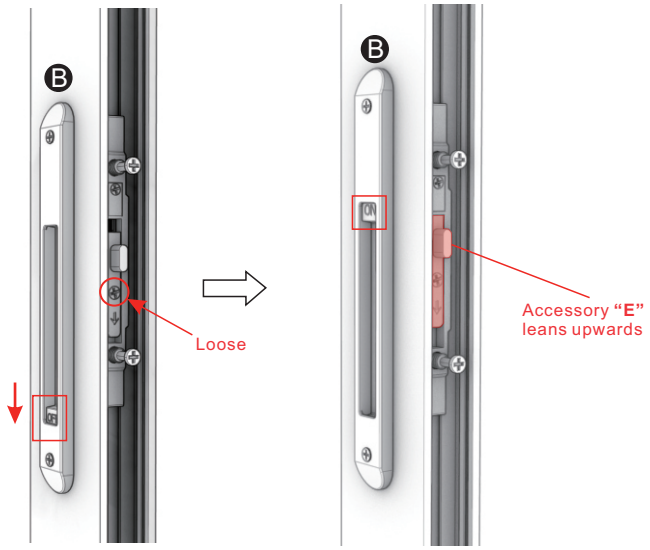

⑥ Tighten the screw

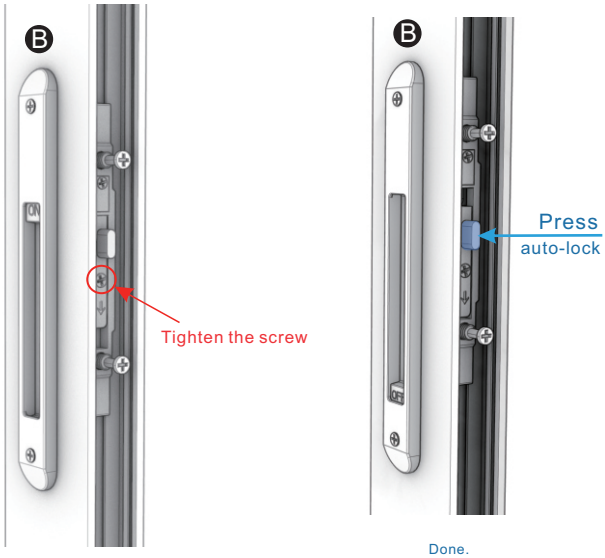

5 Install the buckle

① Install **"H"**

② Tighten the screws

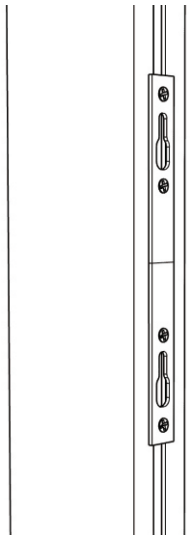

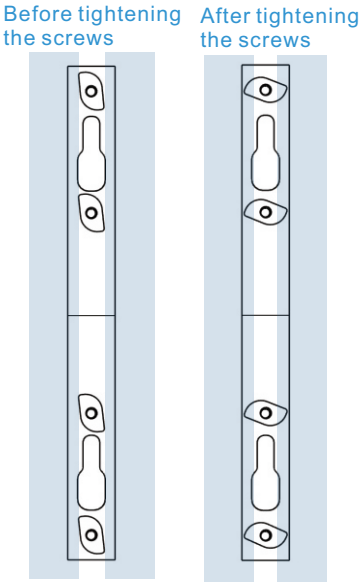

③ Align position

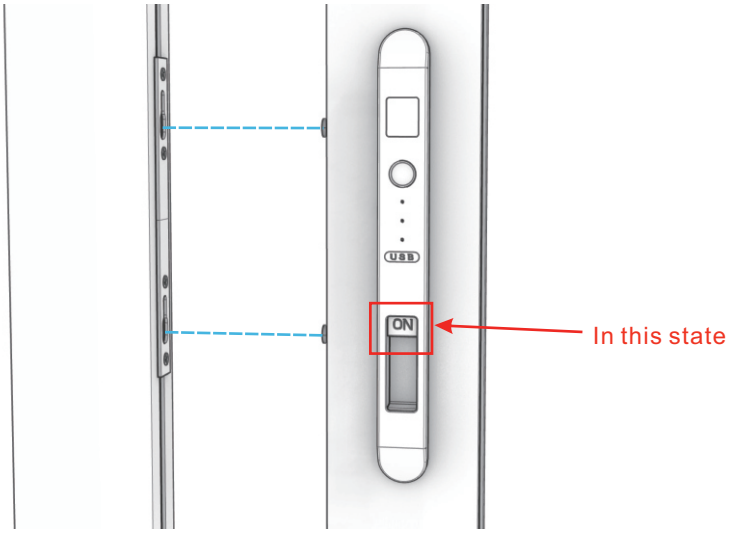

1 Accessories

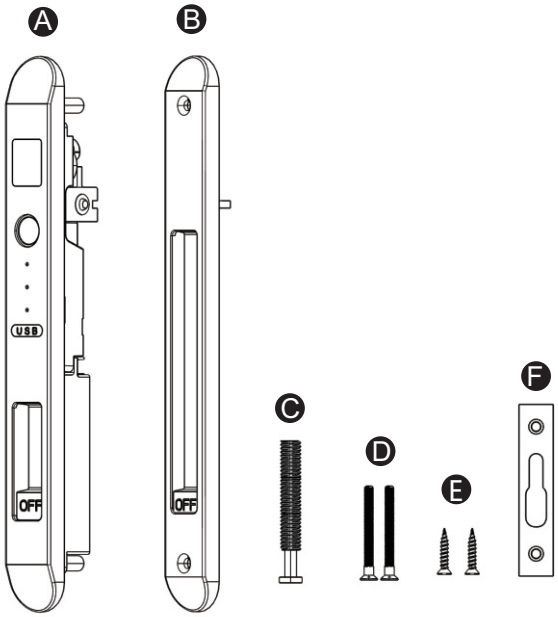

2 Before installation

Reserve a location for installing smart locks

① Measure the size of door hole.

② Drill the door hole will tool.

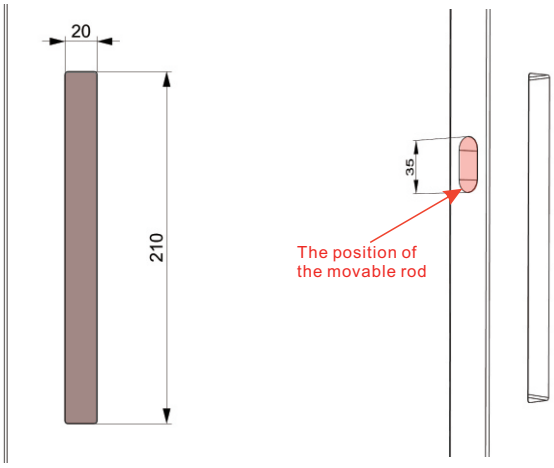

3 Install smart lock

① Fix the front and rear panels with screws

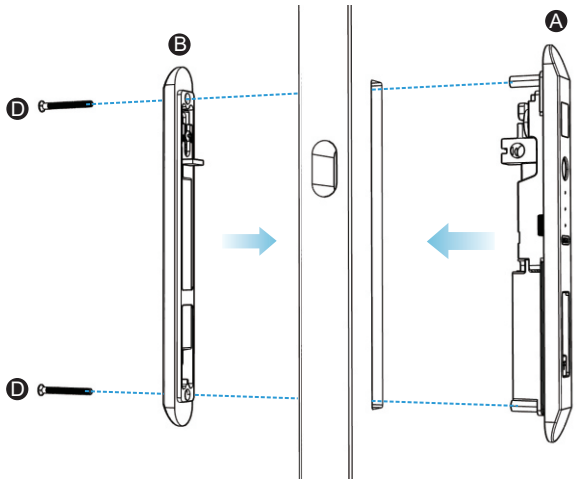

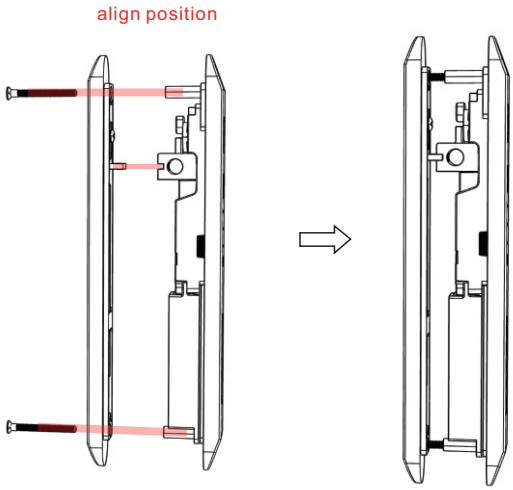

② Installation **“C”**.

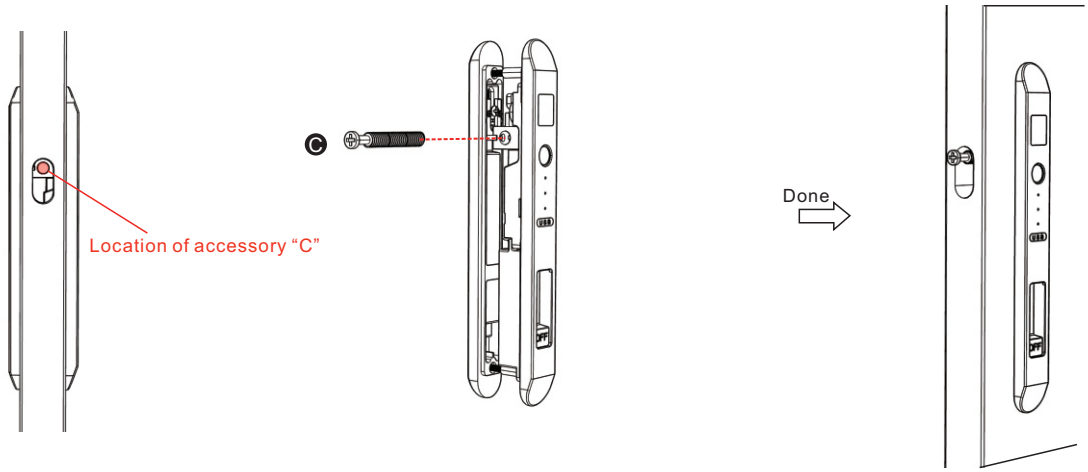

③ Install the latch

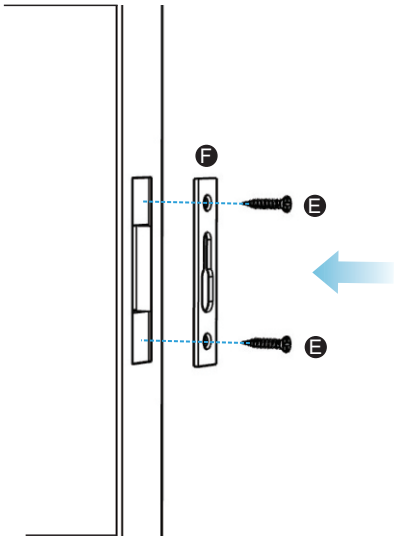

④ align position

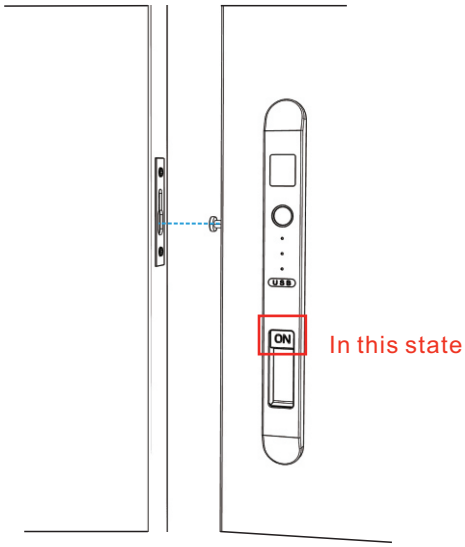

FCC Warnning:

This equipment has been tested and found to comply with the limits for a Class B digital device, pursuant to part 15 of the FCC Rules. These limits are designed to provide reasonable protection againstharmful interference in a residential installation. This equipment generates, uses and can radiateradio frequency energy and, if not installed and used in accordance with the instructions, maycause harmful interference to radio communications. However, there is no guarantee thatinterference will not occur in a particular installation. If this equipment does cause harmfulinterference to radio or television reception, which can be determined by turning the equipmentoff and on, the user is encouraged to try to correct the interference by one or more of thefollowing measures:

- Reorient or relocate the receiving antenna.
- Increase the separation between the equipment and receiver.
- Connect the equipment into an outlet on a circuit different from that to which the receiver is connected.
- Consult the dealer or an experienced radio/TV technician for help.

Caution: Any changes or modifications to this device not explicitly approved by manufacturer could void your authority to operate this equipment.

This device complies with part 15 of the FCC Rules. Operation is subject to the following two conditions:

(1)This device may not cause harmful interference, and (2) this device must accept any interference received, including interference that may cause undesired operation.

This equipment complies with FCC radiation exposure limits set forth for an uncontrolled environment. This equipment should be installed and operated with minimum distance 0cm between the radiator and your body.