ATEKO® 深圳市鼎盛光电有限公司
SHENZHEN ATEKO PHOTE ELECTRICITY CO., LCD

Board Specification

Model：HZ-TA22UV1.0

Prepared by (编制)	Checked by (审核)	Rechecked by (复核)	Approved by (批准)
李彩艳			

地址：深圳市南山区中山园路 1001 号 TCL 国际 E 城 E1 栋 4 楼
ADDRESS: 4F E1 Building, TCL international E City, No.1001 Zhongshanyuan Road, Nanshan District, Shenzhen, P.R.China 518055;
电话/TELEPHONE: 0755-26742425，26740460
传真/FAX: 0755-26740494

Catalogue（目录）

目录

Board Specification 1
Model：HZ-TA22UV1.0 1
1. General Specifications 2
2. General Specifications 3
3. Electrical Characteristics 3
4. BT Specifications 5
6. Module configurations 6
7. Pin definition 8
8. Packing 9
9. Matters Need Attention 9

Amendment record（修改记录）

REVISION NO. （修订号）	PAGE （页码）	Modify content （修改内容）	DATE （日期）
A1	ALL	First edition	2025.04.23

版权 ATEKO所有，本文档内容属商业机密。未经允许，任何组织或个人不得以任何形式复制和传播。

1. General Specifications

- The HZ-TA22UV1.0 is a highly integrated single-chip that support 2-stream 802.11ac solutions with Multi-user MIMO (Multiple-Input,Multiple-Output) with Wireless LAN (WLAN) USB2.0 network interface controller It combines a WLAN MAC, a 2T2R capable WLAN baseband,and RF in single chip.

- HZ-TA22UV1.0是一款高度集成的单芯片，支持2流802.11ac，具有多用户MIMO(多输入、多输出)和无线局域网(WLANUSB2.0) 网络接口控制器，它结合了WLAN MAC、支持2T2R功能的WLAN基带和RF 单芯片。

- The HZ-TA22UV1.0 provides a complete solution for a high-performance integrated wireless and Bluetooth device.

- HZ-TA22UV1.0为高性能集成无线和蓝牙设备提供了完整的解决方案。

版权 ATEKO所有，本文档内容属商业机密。未经允许，任何组织或个人不得以任何形式复制和传播。

2. General Specifications

Protocol Name	WIFI 11 a/b/g/n/ac 2T2R and BT5.0 Module
Major Chipset	Realtek RTL8822CU-CG
Standard	IEEE802.11a/b/g/n/ac, BT2.1/3.0/4.2/5.0
Data Transfer Rate	1,2,5.5,6,11,12,18,22,24,30,36,48,54,60,90,120 and maximum of 867Mbps
Modulation Method	DSSS/DBPSK/DQPSK/16-QAM/256QAM
Frequency Band	2.4~2.4835GHz,5.0~5.8 GHz
Spread Spectrum	IEEE 802.11b:DSSS(Direct Sequence Spread Spectrum) IEEE802.11a/g/n/ac;OFDM(Othogonal rthogonal Frequence Division Multiplexing)
Interface	USB2.0
Operating Temperature	-10℃ to 70℃(Ambient)
Storage Temperature	-40℃ to 90℃
Humidity	5 to 90% maximum(non-condensing)
Dimension	30×25×6.0mm（L×W×H）±0.2mm

3. Electrical Characteristics

2.4GHz RF Specification

WLAM Standard	IEEE 802.11a/b/g/n/ac WIFI compliant
Frequency Range	2.400GHz~2.497 GHz(2.4 GHz ISM Band)
Number of Channels	2.4GHz:Ch1~Ch14
Modulation	802.11b:DQPSK,DBPSK,CCK 802.11 g/n:OFDM/64-QAM,16-QAM,QPSK,BPSK
Output Power	802.11b/11Mbps:19dBm±1dB@EVM≤-15dB
	802.11g/54Mbps:26 dBm±1dB@EVM≤-28dB
	802.11n/MCS7: 27 dBm±1dB@EVM≤-30dB
Receive Sensitivity 11b,20MHz @8%PER	-11Mbps PER@-82dBm,typical
Receive Sensitivity 11g,20MHz @10%PER	-54Mbps PER@-71 dBm,typical

版权 ATEKO所有，本文档内容属商业机密。未经允许，任何组织或个人不得以任何形式复制和传播。

Receive Sensitivity 11n,20MHz @10%PER	-MCS=7 PER @-68 dBm,typical
Receive Sensitivity 11n,40MHz @10%PER	-MCS=7 PER@-66 dBm,typical

5GHz RF Specification

WLAN Standard	IEEE 802.11a/n 2x2,WiFi compliant
Frequency Range	4.900 GHz～5.845 GHz(5.0 GHz ISM Band)
Number of Channels	5.0GHz:Please see the table
Modulation	802.11a:OFDM/64-QAM,16-QAM,QPSK BPSK 802.11n:OFDM/64-QAM,16-QAM,QPSK BPSK
Output Power	802.11a 54Mbps: 11 dBm±1dB@.EVMS-25dB
	802.11n HT20/MCS7: 11 dBm±1dB@EVM≤-28dB
	802.11n HT40/MCS7: 11 dBm±1dB@EVM≤-28dB
	802.11ac VHT20/MCS8 11 dBm±1dB@EVM≤-30dB
	802.11ac VHT40/MCS9 11 dBm±1dB@EVM≤-32dB
	802.11ac VHT80/MCS9: 11 dBm±1dB @EVM≤-32dB
Receive Sensitivity 11a,20MHz @10%PER	-54Mbps PER@-71 dBm,typical
Receive Sensitivity 11n,20MHz @10%PER	-MCS=7 PER @-68 dBm,typical
Receive Sensitivity 11n,40MHz @10%PER	-MCS=7 PER @-66 dBm,typical
Receive Sensitivity 11ac,20MHz @10%PER	-MCS=7 PER @-64 dBm,tvpical
Receive Sensitivity 11ac,40MHE@10%PER	-MCS=7 PER @-58 dBm.tvpical
Receive Sensitivity 11ac,80MHz @10%PER	-MCS=7 PER @-55 dBm.typical

版权 ATEKO所有，本文档内容属商业机密。未经允许，任何组织或个人不得以任何形式复制和传播。

4. BT Specifications

General Specification			
Bluetooth Standard	BT2.1/3.0/4.2/5.0		
Host Interface	USB2.0		
Frequency Band	2402 MHz~2480 MHz		
Number of Channels	79 channels for BDR+EDR 40 channels for BLE		
Modulation	GFSK,8DPSK, π/4-DQPSK		
RF Specification			
	Min.	Typical	M
Output Power	2dBm		7dBm
Sensitivity @BER=0.01% For GFSK(1Mbps)		-86dBm	
Sensitivity @BER=0.01%		-86dBm	
Sensitivity@BER=0.01% for 8DPSK(3Mbps)		-80dBm	
Maximum Input Level	GFSK(1Mpbs):-20dBm		
	π/4-DQPSK(2Mbps):-20dBm		
	8DPSK(3Mbps):-20dBm		

版权 ATEKO所有，本文档内容属商业机密。未经允许，任何组织或个人不得以任何形式复制和传播。

5. System Block Diagram

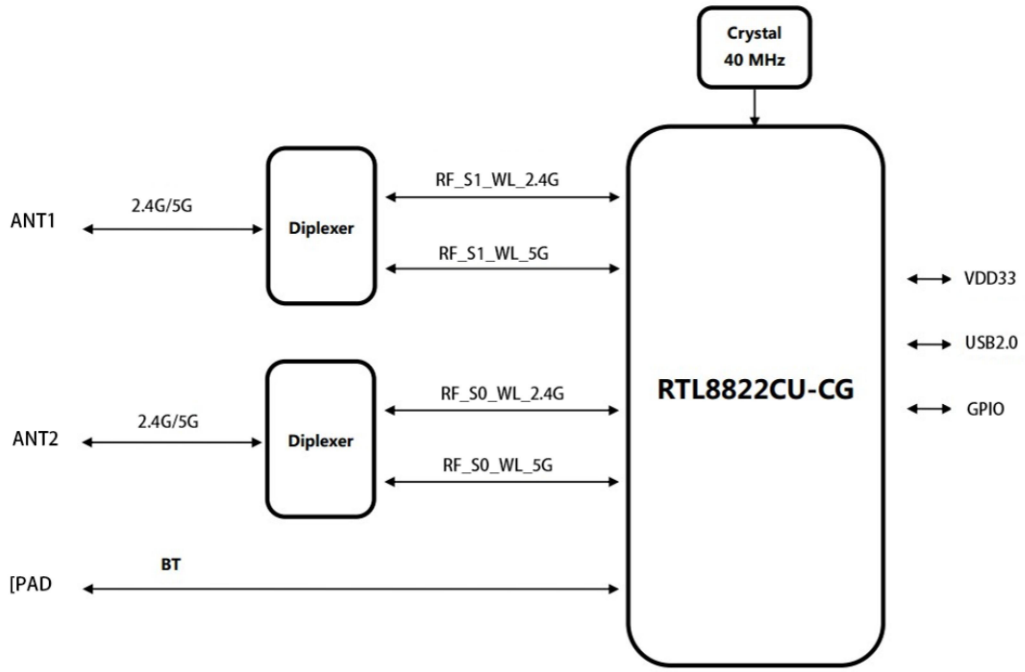

6. Module configurations

All of pictures below are only for reference. Please take the actual objects as a standard.

（以下图片仅供参考,请以实物为准）

版权 ATEKO所有，本文档内容属商业机密。未经允许，任何组织或个人不得以任何形式复制和传播。

CAD DIMENSIONS（CAD 尺寸）

PCB thickness：1.0mm
Module overall thickness：1.7mm
Iron shell thickness：4.8mm
Overall module thickness：5.8mm

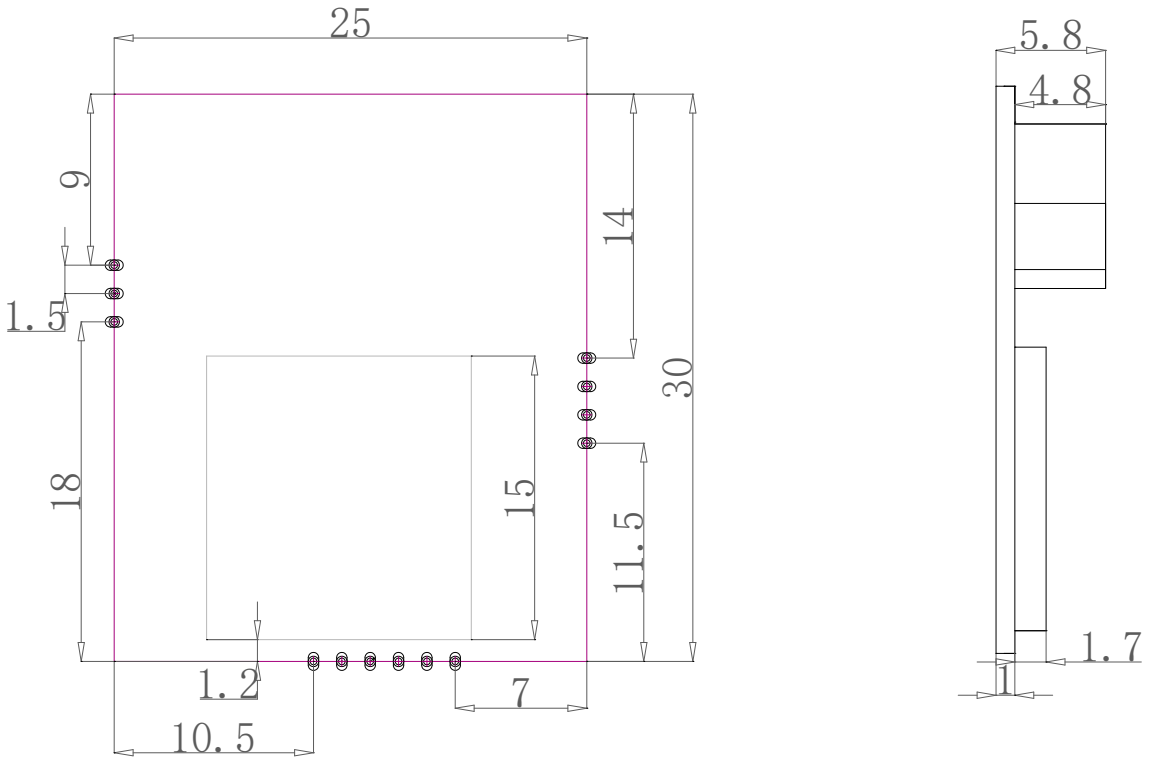

版权 ATEKO所有，本文档内容属商业机密。未经允许，任何组织或个人不得以任何形式复制和传播。

7. Pin definition

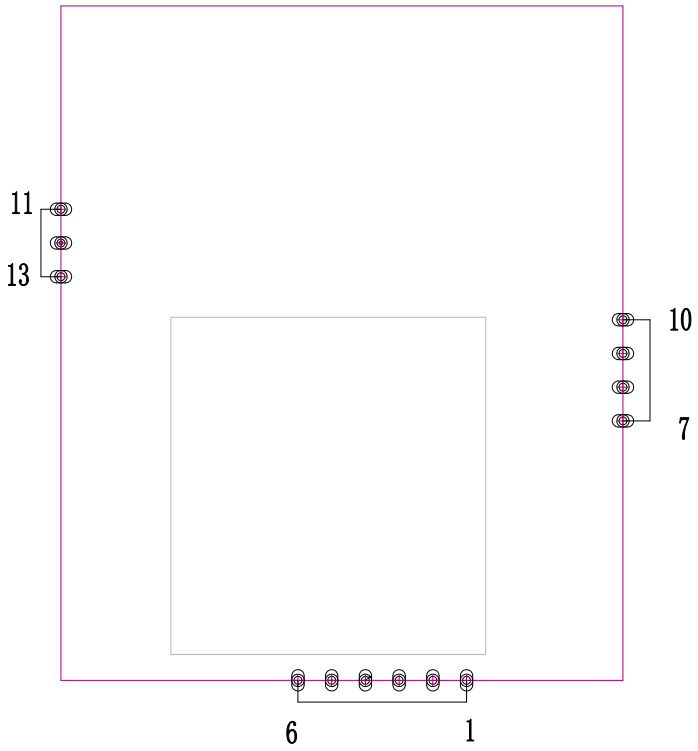

Pin	Definition	Description
1	GND	Ground connections
2	DP	USB positive differential data lines
3	DM	USB negative differential data lines
4	VCC	Power supply 3.3V
5	RESET	System reset ,low active(模组47k上拉，串100R)
6	WOW	Wake up system via wifi,low active(模组10K1拉)
7	GND	Ground connections
8	NC	NC
9	BT_WAKE_HOST	Wake up system via BT,low active(模组10k上拉)
10	GND	Ground connections
11	GND	Ground connections
12	BT_RF	Bluetooth RF output
13	GND	Ground connections

版权 ATEKO所有，本文档内容属商业机密。未经允许，任何组织或个人不得以任何形式复制和传播。

8. Packing

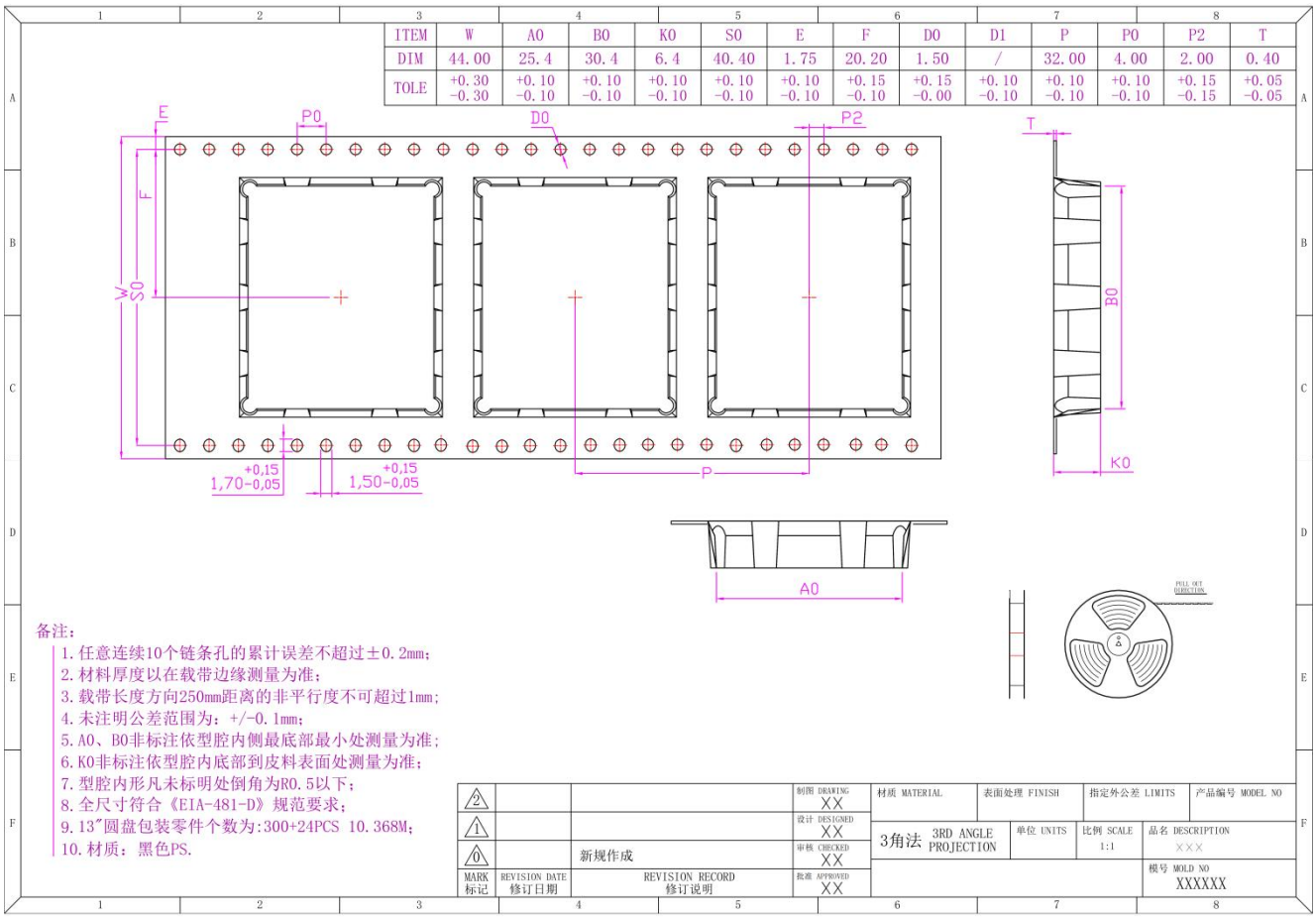

9. Matters Need Attention

Environmental Requirement（环境要求）：

- ◆ Do not pressed and distorted.（禁止挤压和弯曲）
- ◆ Keep away from static and water.（远离静电和水）
- ◆ Relative humidity : 10% ~ 90%.（相对湿度：10% ~ 90%）
- ◆ Storage humidity : 5% ~ 95%.（储存湿度：5% ~ 95%）
- ◆ Storage temperature: -10~ +60℃.（储存温度：-10~ +60℃）
- ◆ Operation temperature: 0~ +40℃.（操作温度：0~ +40℃）
- ◆ Cooling Method: Ventilation cooling.（冷却方式：通风）
- ◆ The production shall not be exposed to dripping or splashing and that no objects filled with liquids, such as vases, shall be placed on it.（该产品不能遭到水滴或水溅，而且设备上不能放置诸如花瓶一类装满液体的物品）
- ◆ Please use it under the condition of good aeration.（该产品使用时需有良好通风）
- ◆ 5000 meters above sea level.（海拔5000米以下）

版权 ATEKO所有，本文档内容属商业机密。未经允许，任何组织或个人不得以任何形式复制和传播。

FCC Statement

This device complies with part 15 of the FCC rules. Operation is subject to the following two conditions: (1) this device may not cause harmful interference, and (2) this device must accept any interference received, including interference that may cause undesired operation.

Changes or modifications not expressly approved by the party responsible for compliance could void the user' s authority to operate the equipment.

NOTE: This equipment has been tested and found to comply with the limits for a Class B digital device, pursua nt to part 15 of the FCC Rules. These limits are designed to provide reasonable protection against harmful inte rference in a residential installation. This equipment generates uses and can radiate radio frequency energy a nd, if not installed and used in accordance with the instructions, may cause harmful interference to radio com munications. However, there is no guarantee that interference will not occur in a particular installation. If this equipment does cause harmful interference to radio or television reception, which can be determined by turn ing the equipment off and on, the user is encouraged to try to correct the interference by one or more of the following measures:

- Reorient or relocate the receiving antenna.
- Increase the separation between the equipment and receiver.
- Connect the equipment into an outlet on a circuit different from that to which the receiver is connected.
- Consult the dealer or an experienced radio/TV technician for help important announcement

Important Note:

Radiation Exposure Statement

This equipment complies with FCC radiation exposure limits set forth for an uncontrolled environment. This equipment should be installed and operated with minimum distance 20cm between the radiator and your body.

This transmitter must not be co-located or operating in conjunction with any other antenna or transmitter.

Country Code selection feature to be disabled for products marketed to the US/Canada.

This device is intended only for OEM integrators under the following conditions:

1. The antenna must be installed such that 20 cm is maintained between the antenna and users, and
2. The transmitter module may not be co-located with any other transmitter or antenna,
3. For all products market in US, OEM has to limit the operation channels in CH1 to CH11 for 2.4G band by supplied firmware programming tool. OEM shall not supply any tool or info to the end-user regarding to Regulatory Domain change. (if modular only test Channel 1-11)

As long as the three conditions above are met, further transmitter testing will not be required. However, the OEM integrator is still responsible for testing their end-product for any additional compliance requirements required with this module installed.

Important Note:

In the event that these conditions cannot be met (for example certain laptop configurations or co-location with another transmitter), then the FCC authorization is no longer considered valid and the FCC ID cannot be used on the final product. In these circumstances, the OEM integrator will be responsible for re-evaluating the end product (including the transmitter) and obtaining a separate FCC authorization.

End Product Labeling

The final end product must be labeled in a visible area with the following"

Contains FCC ID: **2BGY7-HZ02** "

Manual Information to the End User

The OEM integrator has to be aware not to provide information to the end user regarding how to install or remove this RF module in the user's manual of the end product which integrates this module.

The end user manual shall include all required regulatory information/warning as show in this manual.

Integration instructions for host product manufacturers according to KDB 996369 D03 OEM Manual v01r01

2.2 List of applicable FCC rules

CFR 47 FCC PART 15 SUBPART C has been investigated. It is applicable to the modular transmitter

2.3 Specific operational use conditions

This module is stand-alone modular. If the end product will involve the Multiple simultaneously transmitting condition or different operational conditions for a stand-alone modular transmitter in a host, host manufacturer have to consult with module manufacturer for the installation method in end system.

2.4 Limited module procedures

Not applicable

2.5 Trace antenna designs

Not applicable

2.6 RF exposure considerations

This equipment complies with FCC radiation exposure limits set forth for an uncontrolled environment. This equipment should be installed and operated with minimum distance 20cm between the radiator & your body.

2.7 Antennas

This radio transmitter **FCC ID:2BGY7-HZ02** has been approved by Federal Communications Commission to operate with the antenna types listed below, with the maximum permissible gain indicated. Antenna types not included in this list that have a gain greater than the maximum gain indicated for any type listed are strictly prohibited for use with this device.

Antenna No.	Model No. of antenna:	Type of antenna:	Gain of the antenna (Max.)		Frequency range:
			Antenna 1	Antenna 2	
Bluetooth	/	Internal Antenna	1.68	N/A	2402-2480MHz
2.4G Wi-Fi	/	Internal Antenna	2.0	-2.49	2412-2462MHz
U-NII-1	/	Internal Antenna	2.47	1.10	5180-5240MHz
U-NII-2A	/	Internal Antenna	2.47	1.59	5260-5320MHz
U-NII-2C	/	Internal Antenna	3.49	1.34	5500-5720MHz
U-NII-3	/	Internal Antenna	4.09	3.04	5745-5825MHz

2.8 Label and compliance information

The final end product must be labeled in a visible area with the following" Contains **FCC ID:2BGY7-HZ02**".

2.9 Information on test modes and additional testing requirements

Host manufacturer is strongly recommended to confirm compliance with FCC requirements for the transmitter when the module is installed in the host.

2.10 Additional testing, Part 15 Subpart B disclaimer

Host manufacturer is responsible for compliance of the host system with module installed with all other applicable requirements for the system such as Part 15 B.

2.11 Note EMI Considerations

Host manufacture is recommended to use D04 Module Integration Guide recommending as "best practice" RF design engineering testing and evaluation in case non-linear interactions generate additional non-compliant limits due to module placement to host components or properties.

2.12 How to make changes

This module is stand-alone modular. If the end product will involve the Multiple simultaneously transmitting condition or different operational conditions for a stand-alone modular transmitter in a host, host manufacturer have to consult with module manufacturer for the installation method in end system. According to the KDB 996369 D02 Q&A Q12, that a host manufacture only needs to do an evaluation (i.e., no C2PC required when no emission exceeds the limit of any individual device (including unintentional radiators) as a composite. The host manufacturer must fix any failure.