MICRO-X

ARGUS OPERATOR MANUAL

MBI656-02

Congratulations on your purchase. Thankyou for choosing Micro-X.

ARGUS OPERATOR MANUAL

MBI656-02

DISCLAIMER

Micro-X Ltd ("Micro-X") has made all reasonable efforts to ensure the information contained in this manual is accurate and complete, as of the date of this manual. The information contained in this manual is provided on an "as-is" basis and subject to change without notice.

To the maximum extent permitted by law, Micro-X expressly disclaims all warranties, either express or implied, with respect to this manual and any information contained herein, including but not limited to the implied warranties of merchantability and fitness for a particular purpose. Micro-X shall not be held liable for any technical or editorial errors or omissions contained herein, or for incidental, special or consequential damages concerning the furnishing or use of this manual or information contained herein.

PROPRIETARY INFORMATION NOTICE

This manual contains proprietary information that is protected by copyright and all rights are reserved. No portion of this document may be copied, photocopied or otherwise reproduced by any means or translated into another language without the prior written consent of Micro-X.

No patent license is granted by this document.

COPYRIGHT NOTICE

Copyright © 2024 by Micro-X Ltd, all rights reserved. Copyright laws and international treaty provisions protect this document. It may not be reproduced or transmitted electronically for the purposes of reproduction either in whole or in part without the prior express and written consent of Micro-X.

TRADEMARK

Product names, logos and brands are the property of Micro-X in Australia and other countries.

SAFETY AND TRAINING DISCLAIMER

The ARGUS is a portable backscatter X-ray system used to generate and control X-rays for industrial and security inspection procedures. The effective and safe use of this product requires specialized training, skills, and knowledge, and requires licensing in most jurisdictions. By purchasing or using the ARGUS, the user acknowledges and agrees that it should only be operated by individuals who are duly licensed, trained and qualified in handling the ARGUS.

Micro-X disclaims any liability for the misuse, improper handling, or any consequences resulting from the use of this product by unlicensed, untrained or unqualified personnel or use that is not in accordance with this manual. It is the responsibility of the end user to ensure that all operators of the ARGUS are adequately trained and licensed, possess the necessary expertise, and use the ARGUS in accordance with this manual. Micro-X does not endorse or encourage the use of the ARGUS in situations where the operator is not sufficiently trained or where the local laws and regulations do not permit its usage. This disclaimer is an integral part of this manual.

WARRANTY DISCLAIMER

Micro-X does not warrant that the operation of the ARGUS will be uninterrupted, error-free, or secure, that the ARGUS will comply with any rules or regulations applicable to the activities in which customers may employ the ARGUS, or that the ARGUS will operate to detect prohibited objects in all circumstances. The user acknowledges that the real-world performance of the ARGUS may vary depending on your deployment, operation, and application of the ARGUS.

To comply with FCC RF exposure limits for general population / uncontrolled exposure, the antennas used for this transmitter must be installed to provide a separation distance of at least 20 cm from all persons and must not be co-located or operating in conjunction with any other antenna or transmitter. Any changes or modifications not expressively approved by Micro-X could void the user's authority granted under FCC Rules to operate this equipment.

This equipment has been tested and found to comply with the limits for a Class A digital device, pursuant to part 15 of the FCC Rules. These limits are designed to provide reasonable protection against harmful interference when the equipment is operated in a commercial environment. This equipment generates, uses, and can radiate radio frequency energy and, if not installed and used in accordance with the instruction manual, may cause harmful interference to radio communications. Operation of this equipment in a residential area is likely to cause harmful interference in which case the user will be required to correct the interference at his own expense.

CONTENTS

Contents

CHAPTER 1 - INTRODUCTION 8
Intended Use 8
CHAPTER 2 - WARNINGS 9
WARNING | Ionizing Radiation Device 9
WARNING | Radiation Operator 9
WARNING | Exclusion Zone 9
WARNING | Do not exceed 10 X-rays in a 1hr period 10
WARNING | Electric Shock Risk 10
WARNING | Radiation After Electrical Power Button Used to Terminate Scan 10
SAFETY INFORMATION 10
X-ray On Light 10
X-ray Arming Key 10
Heavy Lifting 11
CHAPTER 3 - PHYSICAL DESCRIPTION 12
ARGUS Camera 12
Human-Machine Interface (HMI) 13
User End System 14
Accessories 15
Antenna Attachment 15
Cable Attachment 15
CHAPTER 4 - DESCRIPTION OF OPERATION 16
CHAPTER 5 - OPERATING INSTRUCTIONS 17
POWER ON 17
POWER OFF 20
SCANNING SOFTWARE SEQUENCE 21
IMAGE REVIEW 25
CHAPTER 6 - TROUBLESHOOTING 31
ERROR MESSAGES 31
CHAPTER 7 - FAULTS 33
ISSUE CODES 33
FAULT RESOLUTION TABLE 36
CHAPTER 8 - SPECIFICATIONS 38

ARGUS Camera Specifications 38
User End System 39
CHAPTER 9 - MAINTENANCE AND SAFETY 41
System Maintenance 41
Cleaning 41
Battery Replacement and Transport 42
Argus Camera 42
Radio Module 42
Symbols 43

CHAPTER 1 - INTRODUCTION

Intended Use

The MICRO-X ARGUS X-ray Camera System (ARGUS) is a portable backscatter X-ray system used to generate and control X-rays for industrial and security inspection procedures.

The ARGUS consists of two main parts: the ARGUS Camera and the User End System.

Included with the ARGUS are standard accessories such as: one key, one GeTac charger, four antennas that can receive signals from all directions, a 25m communication cable, and a Pelican storage case.

CHAPTER 2 - WARNINGS

WARNING | Ionizing Radiation Device

Ionizing radiation from X-rays can cause long-term injury. The unit complies with radiation safety regulations including ANSI N43.17: Radiation safety for personnel screening systems. To comply with the dose limits for X-ray personnel security screening systems, the exclusion zone and operation limits prescribed below must be followed.

WARNING | Radiation Operator

The System should be operated under supervision of qualified, trained personnel. A lack of supervision by persons who have not been trained or who are unfamiliar with the functions and controls of the System may cause serious injury to the patients, serious injury to the operator, or equipment damage.

WARNING | Exclusion Zone

Before using the X-ray Device, ensure there is a minimum 50m exclusion zone to the front, and a 5m exclusion zone to the sides and rear of the X-ray Device. Ionising radiation from X-rays can cause long-term injury. In accordance with ALARA principles, it is strongly recommended that the exclusion zone be as large as practical.

The primary beam exclusion zone is proportional to operation time. Alternate primary beam exclusions zones are as follows:

Shots/hr	Distance
10	>50m
5	>35m
3	>30m

Table 1 Recommended primary beam exclusions zones.

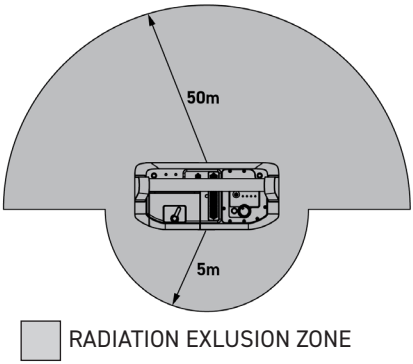

WARNING | Do not exceed 10 X-rays in a 1hr period

Do not exceed 10 X-ray Scans in a 1hr period or the exclusion zone will not effectively mitigate X-rays to below 0.05mSv/h in accordance with ANSI/HPS N43.3 9.3.3

WARNING | Electric Shock Risk

Do not open the ARGUS case at any time, electronic components can contain residual charge which presents an electric shock hazard.

WARNING | Radiation After Electrical Power Button Used to Terminate Scan

If an X-ray Scan is terminated by using the Electrical Power Button to switch off the ARGUS, X-ray radiation may continue for up to 2 seconds after the X-ray On LED switches off.

SAFETY INFORMATION

X-ray On Light

On top of the ARGUS Camera, above the X-ray ON text is an X-ray indication light. This light illuminates RED when X-ray operations are in progress. Illumination failure disables X-ray operation. When a scan has begun the Generator status LED will also be on for the entire scan to show the Unit is in a state where it is producing X-rays.

X-ray Arming Key

The ARGUS requires a key to be able to operate X-rays. The X-ray key needs to be in the enable position to allow the ARGUS system to operate. In the enable position the key cannot be removed and needs to remain in the keylock. This key provides both an input to the system computer and is also interlinked in the X-ray lockout

circuitry. Without the key in the enable position, the End User System will display “Check Interlock”. When the arming key is ARMED the Generator Status LED will flash AMBER and an audio signal will also sound to warn users the ARGUS Camera can now make X-rays.

Heavy Lifting

This product weighs approximately 20kg (44lbs) with the BB2590 battery installed.
When lifting or moving this product, ensure proper lifting techniques are employed. Use assistance if necessary to prevent strain or injury. Always lift with your legs, not your back, and avoid sudden movements. Failure to lift this product correctly may result in personal injury or damage to the product. If you are unsure about lifting this weight safely, seek assistance.

CHAPTER 3 - PHYSICAL DESCRIPTION

ARGUS Camera

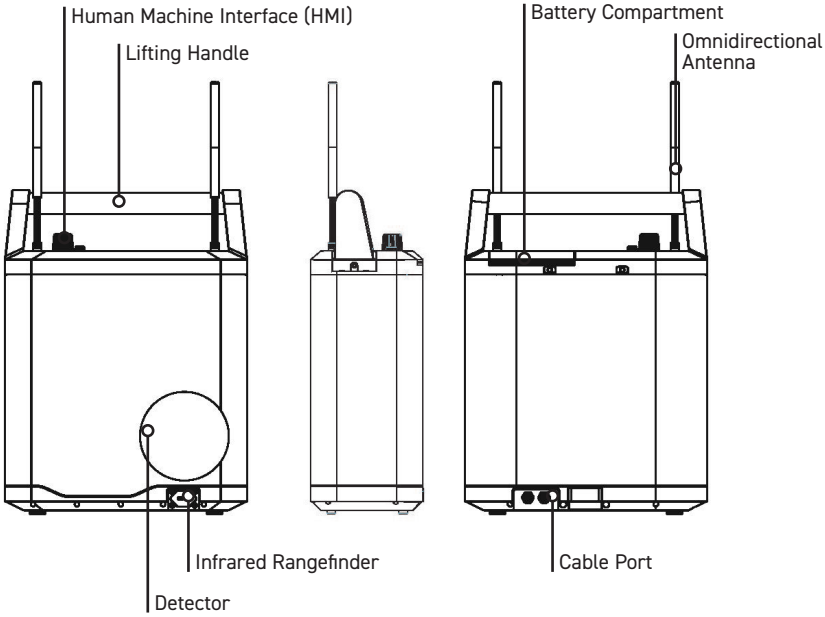

The ARGUS Camera contains an X-ray tube that operates at 160kV with a primary beam offset of 30° to the front panel, accompanied by a detector box featuring a multi-pinhole collimator. A single Backscatter shot has a scan time of 90 seconds. During this period, the device employs a duty cycle for exposure, exposing the target 20 seconds and cooling down for 10 seconds, repeating this cycle 3 times.

Below the detector is an infra-red rangefinder to assist remote positioning of the ARGUS Camera and image reconstruction.

The ARGUS Camera has ports to connect the 2 flexible omnidirectional antennas for wireless communication with the User End System or a cable comms port for wired communication with the User End System.

The battery compartment fits a BB2590 Lithium Ion Battery.

Human-Machine Interface (HMI)

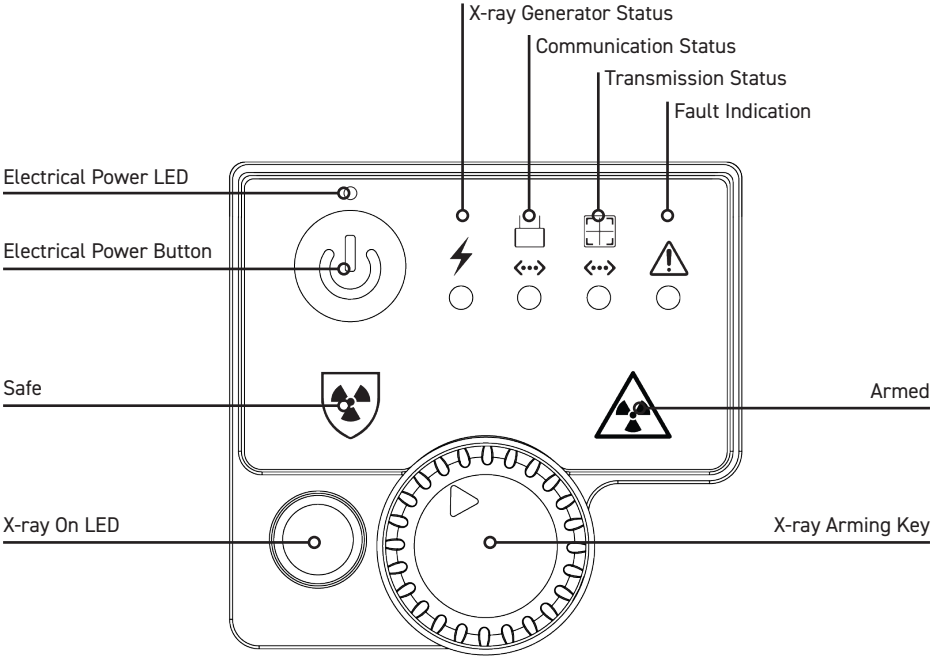

Indicator	Function
Electrical Power LED	Blue LED illuminates when Electrical Power Button is pushed ON.
X-ray On LED	Red light illuminates when radiation is being produced. This is a failsafe light.
X-ray Arming Key	Sets ARGUS Camera to ARMED or SAFE.
X-ray Generator Status	Amber LED flashes when X-ray generator is ARMED. Amber LED continuously illuminated when X-ray generator is enabled.
Communication Status	Blue LED illuminates when User End System and ARGUS Camera communication is connected.
Transmission Status	Blue LED illuminates when Transmission Panel and ARGUS Camera communication is connected. NOTE: transmission is not a feature of the ARGUS
Fault Indication	Amber LED illuminates if a fault has occurred.

User End System

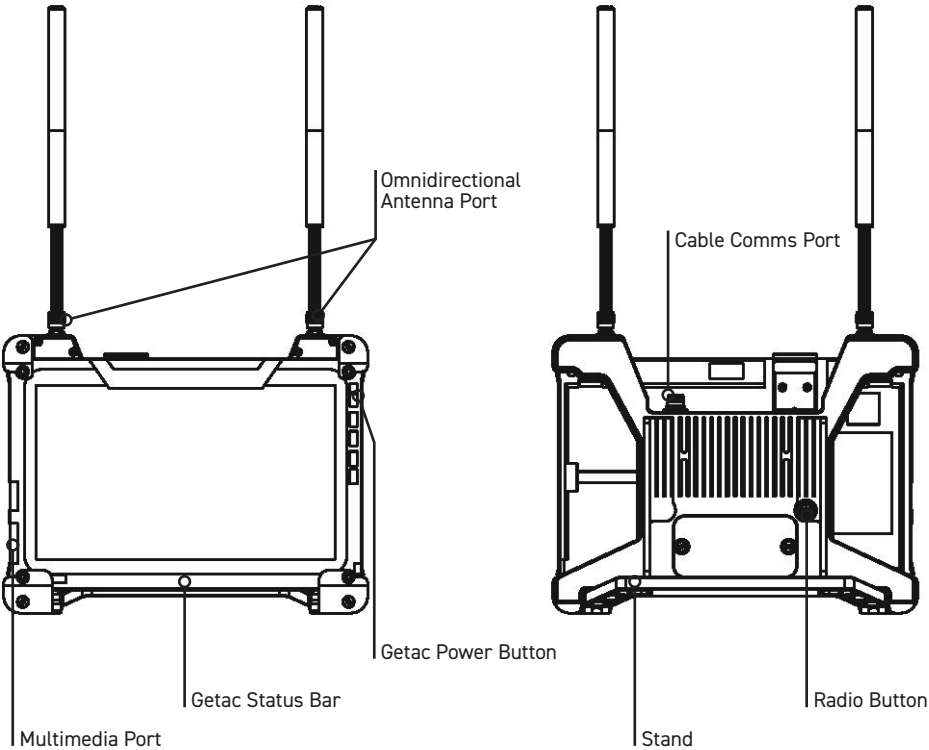

The User End System is comprised of a GeTac F110 Ruggedised Tablet and a Ruggedised Radio Module with a stand. The GeTac F110 Ruggedised Tablet contains the ARGUS Software which provides control of the ARGUS Camera to the operator. With the ARGUS Software, the operator can initiate backscatter scans, review the acquired images and export them through the multimedia port. The Radio Module contains ports for removable Antennas for wireless communications and a cable communication port. The radio button has an LED to indicate the radio's status. When illuminated in blue, it signifies the ON state; when not lit, it indicates the OFF state.

Accessories

Antenna Attachment

1. Take the antennas and align it with the corresponding port on your device. Insert the antenna connector into the port.

2. Once inserted, twist the antenna connector clockwise to tighten it onto the port.

To remove the antennas, twist the antenna connector counter-clockwise to loosen it from the port.

Once the antenna connector is sufficiently loosened, carefully pull it away from the port

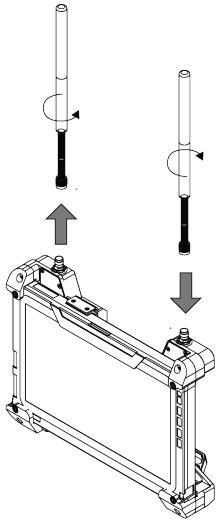

Cable Attachment

Align the cable connector with the device receptacle.
With the connector aligned, gently push the connector into the receptacle.

To remove, slide the black locking mechanism on the push pull connector away from the device while gently pulling the cable away from the connection point.

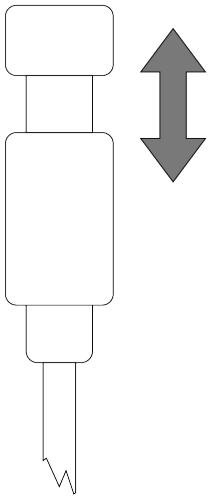

CHAPTER 4 - DESCRIPTION OF OPERATION

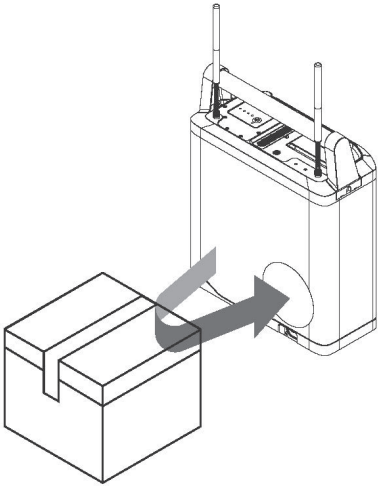

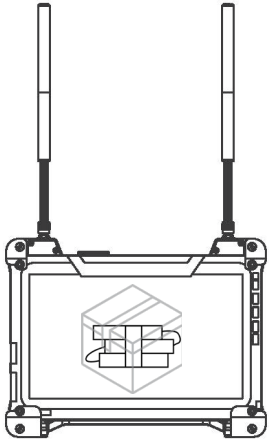

The basic operation of the system is as follows:

- The ARGUS Camera is powered on, establishing wired or wireless communication with the User End System.
- The ARGUS Camera is positioned in front of the Target, with distance assessed using the infra-red rangefinder system via the User End System.
- Scanning is initiated remotely from the User End System (via a wired or wireless connection), activating the X-ray generator and detector.
- The X-ray tube produces radiation at 160kV, exposing the target for 20 seconds and cooling down for 10 seconds, repeating this cycle 3 times.
- The ARGUS Camera receives backscattered data from the internal detector.
- Data is transmitted to the User End System either via the wireless or a wired connection.
- The User End System processes the received data, reconstructs it for display on the tablet, and offers image enhancement using ARGUS software tools such as contrast, brightness, and depth of field adjustments.
- Operators can add notes before optionally exporting images from the ARGUS application.

CHAPTER 5 - OPERATING INSTRUCTIONS

POWER ON

1. Insert the battery into ARGUS until the latch clicks into place.

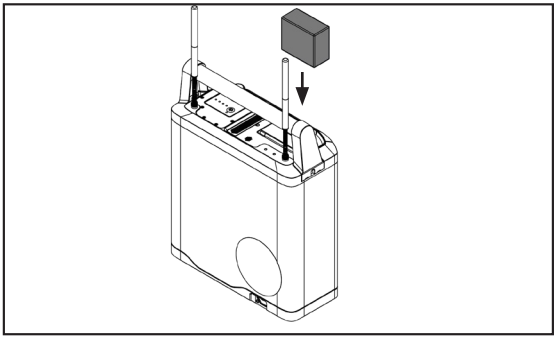

2. Turn on ARGUS with power button, ensuring power light is illuminated.

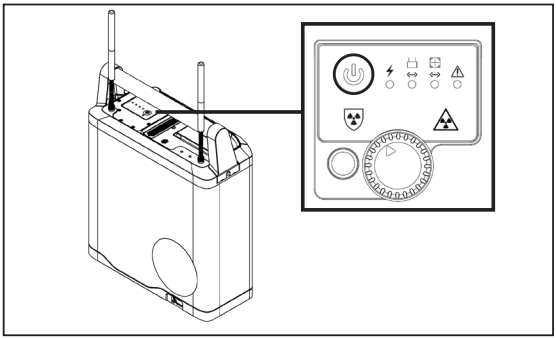

3. Turn on Tablet, ensuring power light is illuminated.

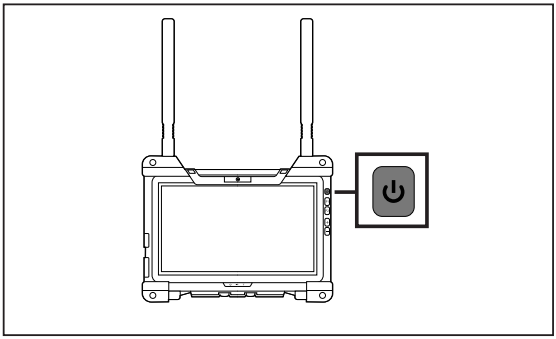

4. Open the ARGUS Software on the Tablet.

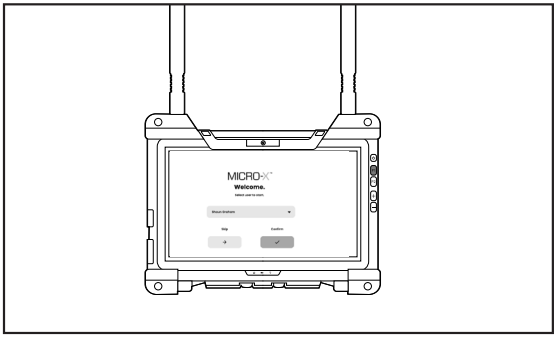

5. Ensure connection is established by checking the connection of the indicators on the ARGUS Camera and End User System.

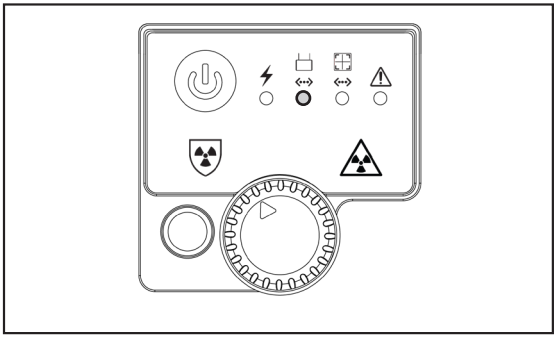

Connection type is shown :

wired

wireless

no connection

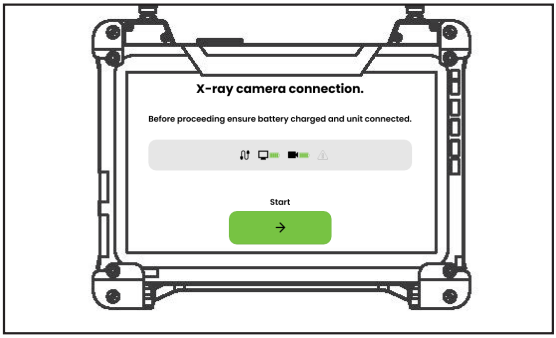

6. Insert the X-ray arming key and switch into the ARMED position. The ARGUS Camera is now armed and able to produce X-rays. The Amber Generator Enable LED will be flashing and the X-ray Warning Sound will pulse.

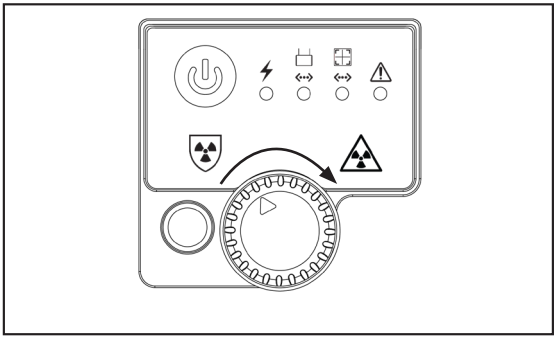

7. Using the lifting handle, position the ARGUS Camera in front of the Target. The distance indicator at the top right corner of the User End System can be used to optimise the distance from the target for the best image resolution. The recommended distance is 200mm from the target.

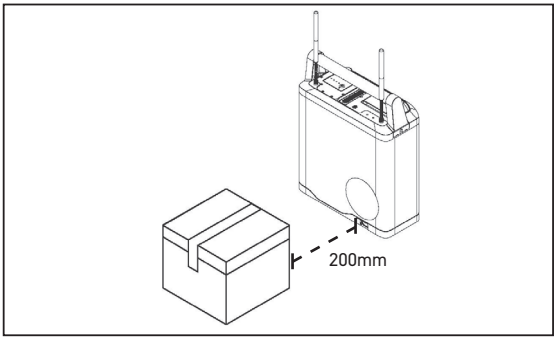

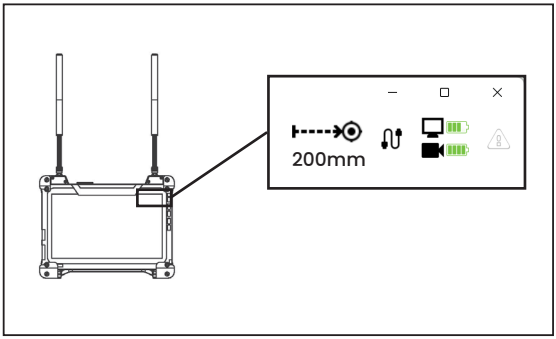

8. ARGUS is ready to scan. Move out of radiation exclusion zone.

RADIATION EXLUSION ZONE

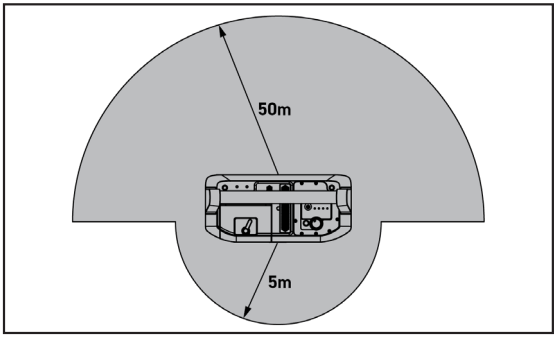

POWER OFF

1. Switch the key switch to the SAFE position.

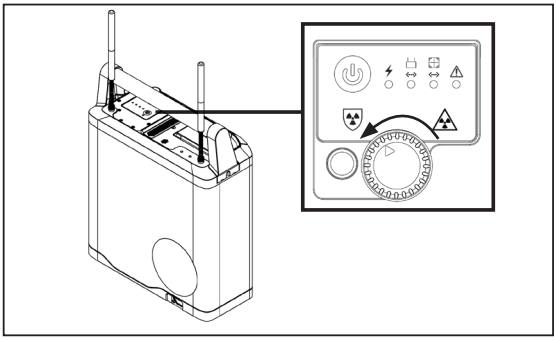

2. Turn off ARGUS Camera with Power Button. Remove battery.

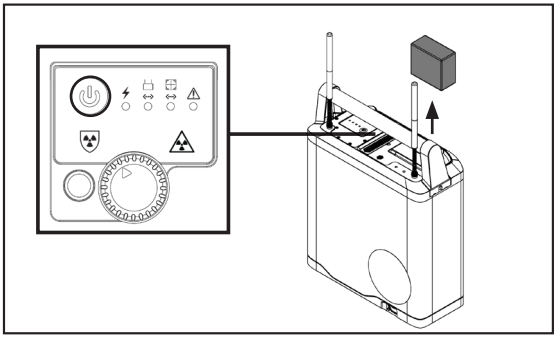

3. Turn off User End System by clicking the power button.

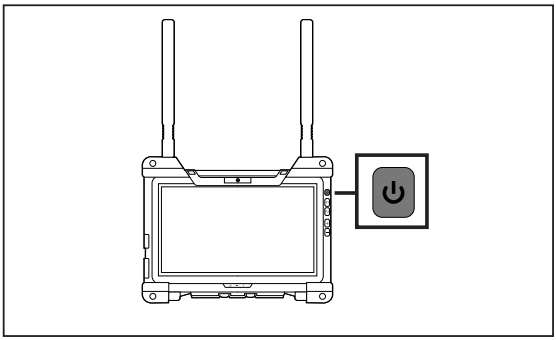

SCANNING SOFTWARE SEQUENCE

1. Click the scan button to proceed with scanning.

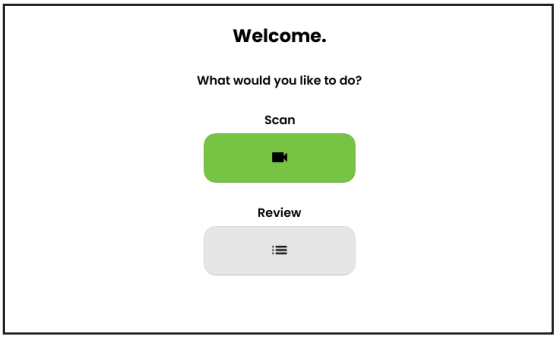

2. Ensure the User End System is connected to the ARGUS Camera.

Status icons as shown :

- Wired
- Wireless
- No connection
- Tablet battery status
- Argus battery status
- No Faults
- Faults

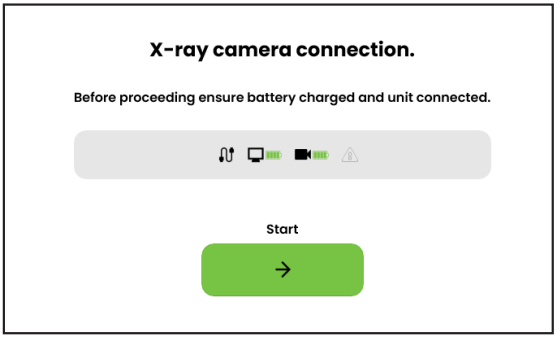

Clicking on each item displays more information regarding the status update. When there are no faults and the ARGUS Camera is connected to the User End System, the start arrow button turns green.

3. ARGUS ready to take a scan.

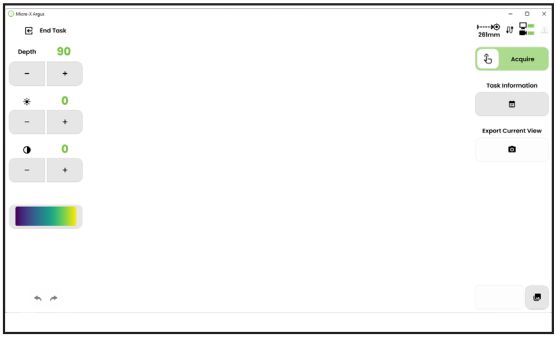

Top right corner displays the status of the ARGUS:

Next to the status update, the distance between the ARGUS Camera to the target is displayed in millimeters:

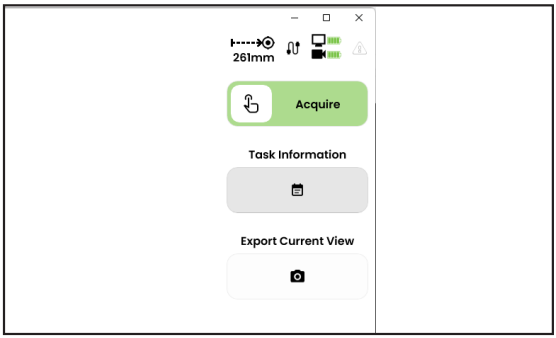

4. Touch then slide the green acquire button to start the scanning process.

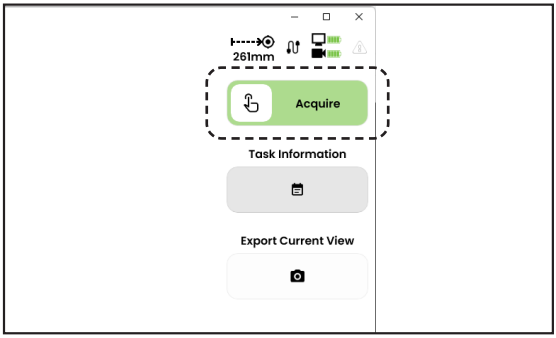

5. Scan is initated and scan in progress warning appears.

The Abort control instantly stops the device and terminates radiation immediately. This emergency function may result in loss of image data.

The Stop control ends the scan in a controlled manner, preserving all available image data collected up to that point. Suitable for routine interruptions.

CAUTION: The ARGUS X-ray warning sound will continuously sound. The X-ray generator status amber LED will be continuously illuminated during a scan. The red Radiation Production light will be illuminated when radiation is being produced.

6. An initial scan image will appear and continue to increase in resolution as the scan progresses.

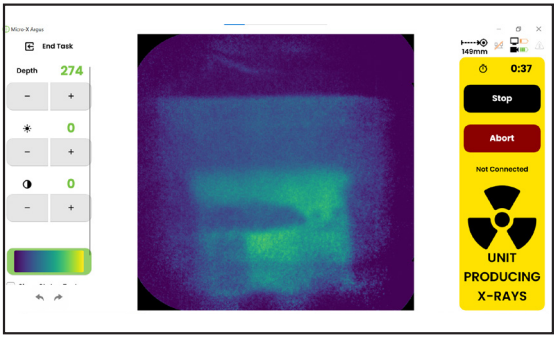

7. The device enters a cooling sequence when the scan is completed. The timing of the cooling sequence is determined by the ARGUS Camera and is dependent on the thermal load in the system.

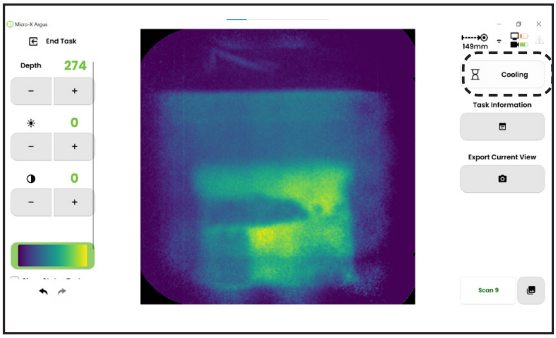

8. When the scan and system cooling sequence is complete, the acquire button appears again and the operator is able to initate another scan. The completed scan is saved locally on the User End System. Review functions on left side, described in review section.

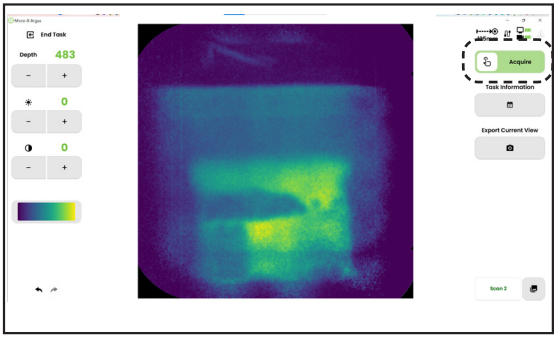

9. End task to finish all scans in task, save and return to welcome scan menu

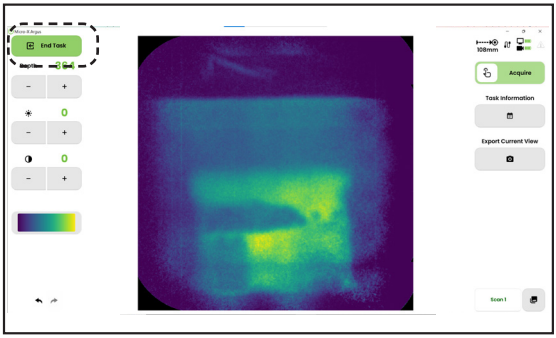

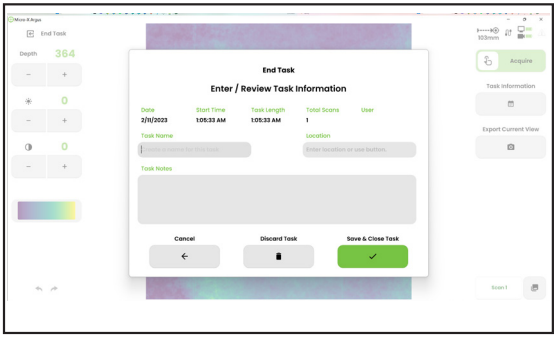

IMAGE REVIEW

1. Select review button to review previous tasks locally stored on the User End System

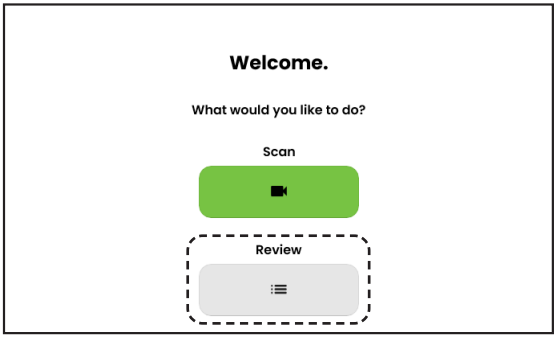

2. Select task to review

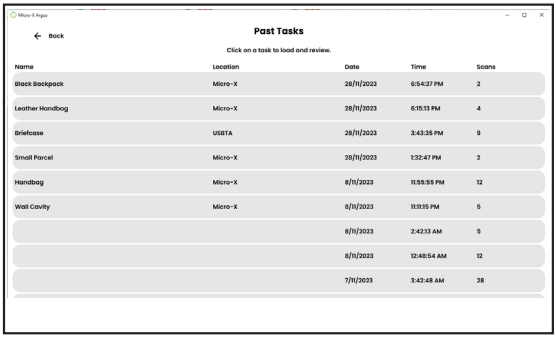

Name	Location	Date	Time	Scans
Black Backpack	Micro-X	28/11/2023	6:54:37 PM	2
Leather Handbag	Micro-X	28/11/2023	6:15:13 PM	4
Briefcase	USBTA	28/11/2023	3:43:35 PM	9
Small Parcel	Micro-X	28/11/2023	1:32:47 PM	2
Handbag	Micro-X	8/11/2023	11:55:55 PM	12
Wall Cavity	Micro-X	8/11/2023	11:11:35 PM	5
		8/11/2023	2:42:13 AM	5
		8/11/2023	12:48:54 AM	12
		7/11/2023	3:42:48 AM	28

3. Using the Controls on the left side, the image display can be adjusted

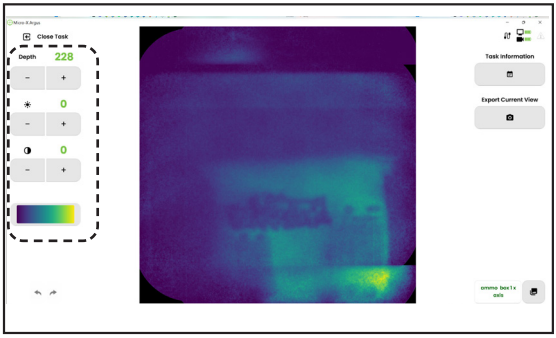

4. Depth moves the focus of the image through the 3D object

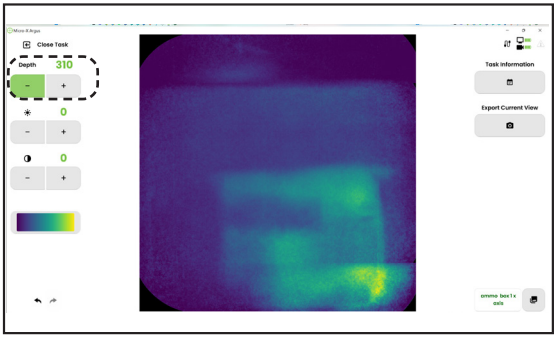

5. Contrast adjusts the difference between the darkest and lightest colours.

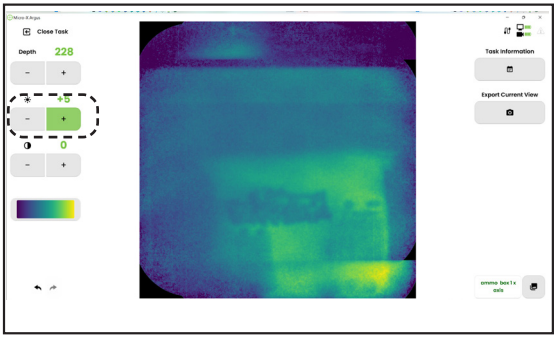

6. Brightness increases the overall lightness of the image, making dark colours lighter and light colours whiter

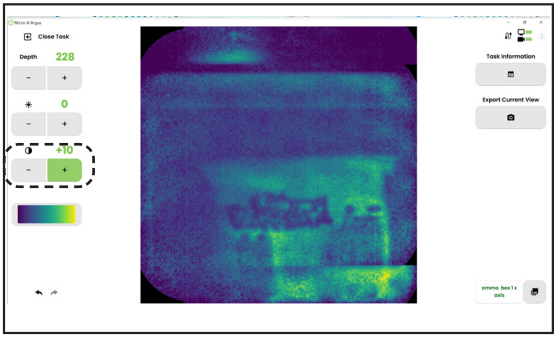

7. Selecting the box changes the colourscale of the image

8. Name of the scan can be edited by pressing the white button on the bottom right corner of the User End System

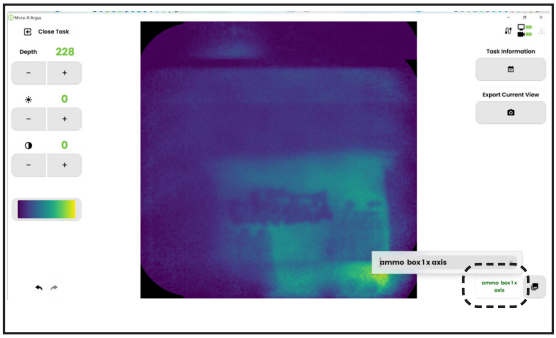

9. Notes about the tasks can be entered by pressing the Task Information button on the right side of the User End System

Task Information

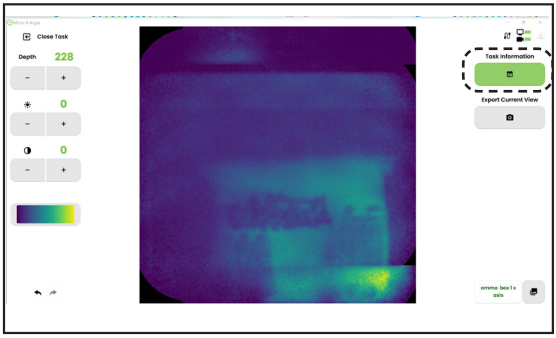

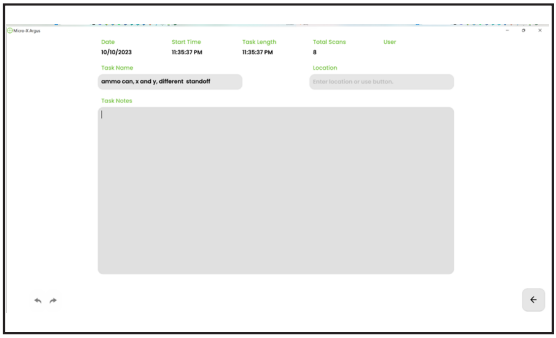

10. The current view of the image displayed on the User End System screen can be exported as a .png file to the GeTac harddrive or to a multimedia device connected to the GeTac by pressing the Export Current View button.

Export Current View

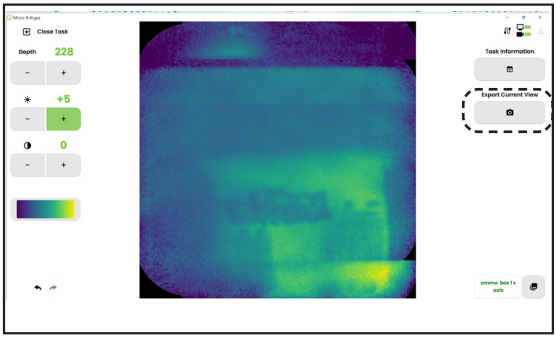

11. To view all scans in the current task, press the photo library button on the bottom right corner

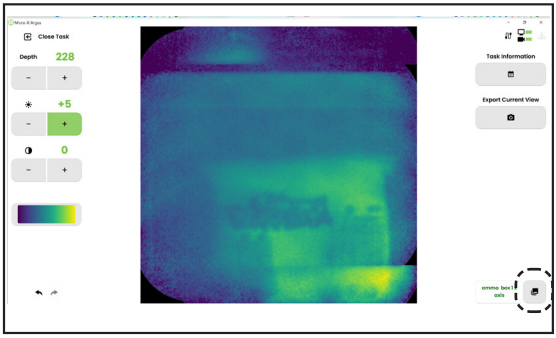

12. To select multiple scans at a time, press the button

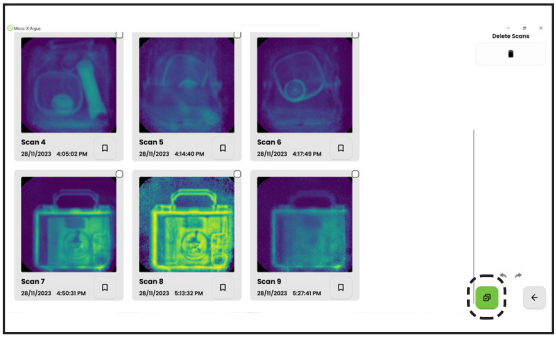

13. Press the return button to return to image page

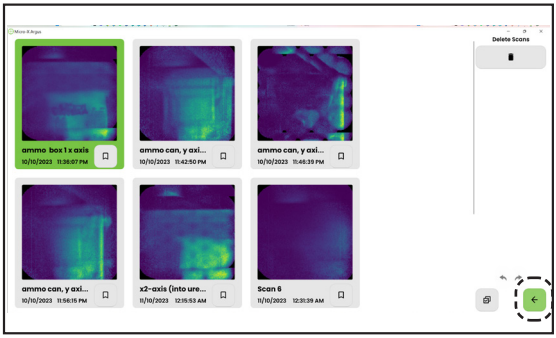

14. Press close task button to return to review menu. If changes have been made the operator will be asked if they want to save or discard changes

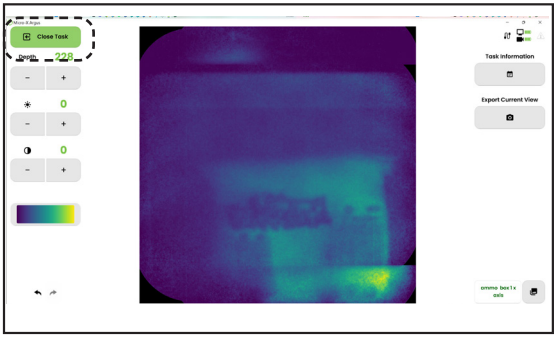

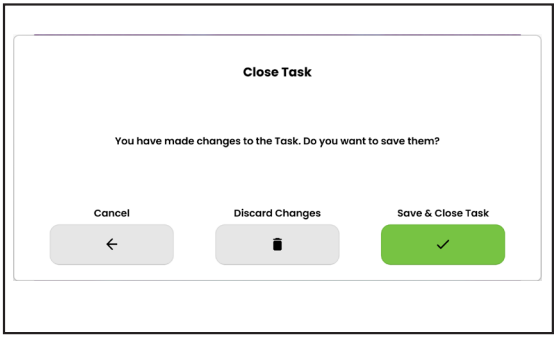

CHAPTER 6 - TROUBLESHOOTING

ERROR MESSAGES

1. X-ray Arming Key not ARMED

Check Interlock message appears on right of ARGUS Software

2. Loss of Communication Connection

Not Connected message appears on right of ARGUS Software

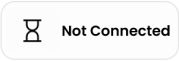

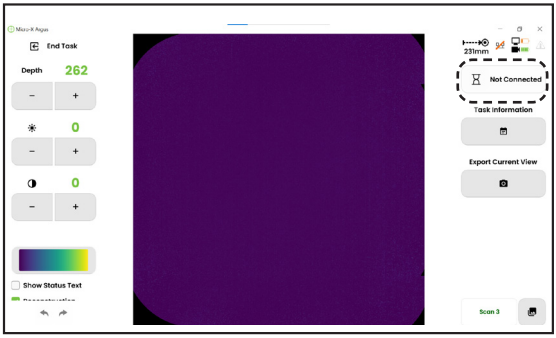

3. Loss of Communication Connection During Scan:

When the connection between the ARGUS Camera and the User End System is lost, the tablet screen displays the following message:

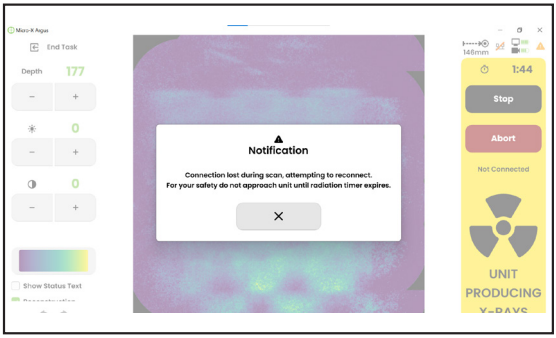

CAUTION: Do not approach ARGUS Camera until the radiation timer has expired and the red Radiation Production light is off.

4. Abort or Stop Scan Attempt During Communication Loss:

If the operator tries to abort or stop a scan while the communication connection between the ARGUS Camera and the User End System is lost, the tablet screen shows the message:

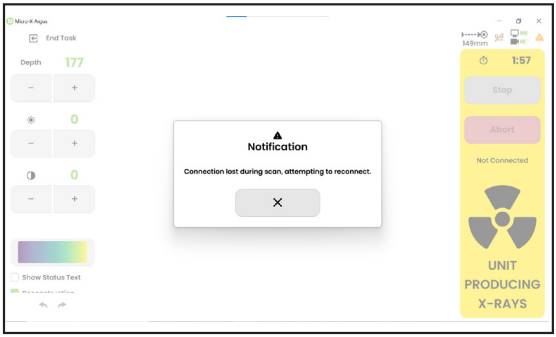

CAUTION: Do not approach ARGUS Camera until the radiation timer has expired and the red Radiation Production light is off.

5. Scan Termination Due to System Fault:

In the event of a system fault leading to the system terminating a scan, the following message appears:

CHAPTER 7 - FAULTS

ISSUE CODES

Issue codes are categorised as CRITICAL, ERROR, WARNING and INFO as follows:

- CRITICAL: Is a condition that prevents/terminates scanning.
- ERROR: Aborted scanning but does not prevent starting a new scan.
- WARNING: May have impacted scan image quality.
- INFO: Other informational fault that should not impact image quality.

The tables included describe the potential ARGUS faults and proposed resolution actions. When there is a fault condition, the ARGUS Camera will show an amber LED and the User End System will show the status and summary information.

Fault Code	Fault Label	Resolution Table	Category
0	System fault.	1	Critical
1	System fault.	1	Critical
2	System fault.	1	Critical
3	Calibration data unavailable.	1	Critical
4	Calibration data unavailable.	1	Critical
5	Calibration data unavailable.	1	Critical
6	Detector not available.D	2	Error
7	Detector frame dropped.	1	Error
8	No Detector frames.	1	Error
9	Detector frame lag.	1	Error
10	Detector frame fault.	1	Error
11	System fault.	3	Info
12	Detector data fault.	1	Error
13	Distance system not available.	1	Warning
14	Distance system measurement fault.	1	Warning
15	Detector data fault.	1	Warning
16	Detector not available.	1	Error
17	Detector configuration failure.	1	Error

Fault Code	Fault Label	Resolution Table	Category
18	Raw data collection failure.	1	Info
19	Processing fault.	1	Critical
20	Processing fault.	1	Error
21	Generator fault.	1	Error
22	Generator fault.	1	Error
23	System fault.	1	Warning
24	System fault.	1	Warning
25	Generator power fault.	1	Error
26	Generator power up fault.	1	Error
27	System fault.	1	Error
28	Temperature sensor fault.	4	Warning
29	Fan sensor fault.	4	Warning
30	Temperature sensor fault.	4	Warning
31	Fan sensor fault.	4	Warning
32	Fan fault.	4	Error
33	Radiation Ready LED fault.	1	Critical
34	System fault.	1	Critical
35	Scan timer fault.	1	Error
36	System fault.	1	Critical
37	System fault.	1	Error
38	Radiation Lamp fault.	1	Critical
39	System fault.	1	Critical
40	System network configuration fault.	1	Warning
41	Generator shutdown failure.	1	Error
42	Generator Under Voltage	1	Error
43	Generator Over Voltage	1	Error
44	Generator fault	1	Error
45	Generator fault	1	Error
46	Generator fault	1	Error

Fault Code	Fault Label	Resolution Table	Category
47	Generator fault	1	Error
48	Generator fault	1	Error
49	Generator fault	1	Error
50	Generator fault	1	Error
51	Generator fault	1	Error
52	Generator fault	1	Error
53	Generator Discharge Failed	1	Error
54	Generator fault	1	Error
55	Generator fault	1	Error
56	Generator fault	1	Error
57	Generator fault	1	Error
58	Generator fault	1	Error
59	Generator fault	1	Error
60	Generator fault	1	Error
61	Generator fault	1	Error
62	Generator fault	1	Error
63	Generator fault	1	Error
64	Generator fault	1	Error
65	Generator fault	1	Error
66	Generator fault	1	Error

FAULT RESOLUTION TABLE

Resolution Table	Type	Resolution	
		Step	**Action**
1	**Reboot**	1	Identify critical fault ID on User End System and follow any on screen advice
		2	Inspect ARGUS Camera to ensure X-ray On LED is off and the device is not emitting radiation
		3	Inspect ARGUS Camera and disengage X-ray Arming Key to put the device into SAFE state
		4	Power cycle the ARGUS Camera by pressing the power button, waiting for the unit to power off, and pressing the button again.
		5	Inspect User End System to ensure the ARGUS Camera has reconnected communications
		6	Inspect fault status
		7	If fault persists, contact service centre and provide fault ID
		Trouble shooting Tip	During power cycle inspect the ARGUS Camera battery status to ensure it has adequate power and no faults by removing the battery and following BB2590 batteries instructions for use
2	**Transmission Detector Faults**	*Transmission is not a released feature of this ARGUS*	
3	**Battery Faults**	1	Identify critical fault ID on User End System and follow any on screen advice
		2	Check connection to transmission panel on User End System
		3	Inspect ARGUS Camera to ensure Radiation light is off and the device is not emitting radiation

Resolution Table	Type	Resolution	
		Step	**Action**
		4	Inspect ARGUS Camera and disengage arming key to put the device into SAFE state
		5	Turn the ARGUS Camera off by pressing the power button
		6	Remove the battery and inspect the battery status gauge to ensure it has adequate power and no faults by following the BB2590 batteries instructions for use
		7	Re-place the battery and power on ARGUS Camera, establishing connection with tablet.
		8	Inspect fault status
		9	If fault persists, contact service centre and provide fault ID
4	**Temperature**	1	Identify critical fault ID on User End System and follow any on screen advice
		2	Inspect ARGUS Camera to ensure X-ray On LED is off and the device is not emitting radiation
		3	Inspect ARGUS Camera and disengage X-ray Arming Key to put the device into SAFE state
		4	Turn the ARGUS Camera off by pressing the power button
		5	Allow the ARGUS Camera to cool for 30mins in a cool shaded location
		6	Power on the ARGUS Camera by pressing the power button
		7	Inspect fault status
		8	If fault persists, contact service centre and provide fault ID

CHAPTER 8 - SPECIFICATIONS

ARGUS Camera Specifications

Model Name	Argus
Model Number	AR0900 (922MHz) AR2400 (2.4GHz)
Generator Type	Constant Potential
Maximum Voltage	160kVp
Image Acquisition Time	30 seconds
Maximum Exposure Time	90 seconds
Backscatter X-ray Detector	161 x 150 mm CMOS Detector
	100um pixel pitch (1600x1500 pixel matrix)
	Csl Scintillator
	Carbon Fibre Window
Battery	BB2590 Li-Ion Battery
	Nominal: 24V DC
	Max: 32V DC
Current Draw	Max: 13 A
Battery Life	Up to 6 hours continuous use
Communications	1W, 922MHz or 2.4GHz COFDM/MIMO Ruggedised Radio
	2x Flexible Omnidirectional Antenna
	Hardwired Communications Cable with Ruggedised Industrial Ethernet Connectors
Encryption	256-bit AES encryption & FIPS 140-3
Human-Machine Interface (HMI)	Power Button with ON/OFF LED indicator
	X-ray Arming Key
	Radiation, Generator Enabled, Connectivity and Fault Indicators

Environmental Specifications	Storage Temperature: -20 °C to +55 °C (-4°F to 131°F) Operating Temperature: -18 °C to 43.5 °C (0 °F to 110 °F) Humidity: 30% to 80% (non-condensing) Altitude : 0 – 3000m
Pollution Degree	Standard Use Pollution degree 3 Service Use Pollution degree 2
System Construction	Robust Glass-Filled Nylon with Carbon Fibre shell
Features	IP55
Infra-Red Range Finder	Class 1 laser device compliant with latest standard IEC 60825-1:2014 - 3rd edition Wavelength: 940nm
Dimensions	425 x 200 x 495 mm (16.7 x 7.9 x 19.5 inches)
Weight	19kg (43lbs)

User End System

Operating System	Windows 10 Pro
Graphical User Interface	Micro-X ARGUS Proprietary X-ray Software
Display	11.6" Wide Viewing Angle TFT LCD FHD (1920x1080) Protection Film 1000 nits LumiBond® display with Sunlight readable technology Capacitive multi-touch screen
Communications Module	1W, 922MHz or 2.4GHz COFDM/MIMO Ruggedised Radio Module with stand 2x Flexible Omnidirectional Antenna Hardwired Communications Cable with Ruggedised Industrial Ethernet Connectors IP55

Battery	GeTac 11.4V 2.68Ah Li-Ion Battery (Tablet) CR123 Li-Ion Battery (Radio Module)
GeTac F110 Features	MIL-STD-810H certified IP66 certified MIL-STD-461G certified Vibration & 1.8m (6ft) drop resistant
GeTac F110 I/O Interface	5M webcam 8M pixels auto focus rear camera Audio in/out combo DC in Jack Thunderbolt™ 4 Type-C USB 3.2 Gen 2 Type-A Docking connector
GeTac F11 Accessories	AC adapter (90W, 100-240VAC, 50 / 60Hz) Capacitive stylus with tether
Environmental Specifications	Storage Temperature: -32°C to 71°C (-60°F to 160°F) Operating Temperature: -18°C to 43.5°C (-20°F to 110°F) GeTac IP66 Communications Module IP55

CHAPTER 9 - MAINTENANCE AND SAFETY

System Maintenance

CAUTION: Do not attempt mechanical or electrical repair of the ARGUS. Contact your authorized Service Provider if any unit does not perform to your satisfaction.

Periodically or as needed:
- Clean the equipment.
- Replace batteries.

Cleaning

IMPORTANT: Turn off the power to the ARGUS before cleaning.

CAUTION: Do not operate the equipment when you are cleaning the equipment.

CAUTION: Do not attempt to clean inside the device.

CAUTION: Do not use aerosol sprays directly on or over the machine.

CAUTION: Do not immerse the equipment in liquid.

Never use abrasive cleaning products such as abrasive sponges, steel wool pads, abrasive powdered cleaners, or harsh detergents. Plastic surfaces are easily scratched. This can ruin the finish. Do not use glass cleaner on plastic. While the damage may not be immediately visible, over time, glass cleaners will leave the plastic with an appearance that doesn't appear to be clean.

Instead, use sponges, soft cloths, and mild detergents when cleaning plastic.
With a damp, lint-free cloth, or an electrostatic dust cloth, wipe the panels and handle.

When moistening a cloth, it is best to use a solution of 70% isopropyl alcohol. Finish cleaning with a dry, lint-free cloth to wipe off any moisture.

Battery Replacement and Transport

Batteries will need to be replaced periodically dependant on usage.

IMPORTANT: Turn off the power to the ARGUS before replacing batteries.

CAUTION: Use caution and avoid touching the terminals.

CAUTION: Do not transport unit with the battery inserted

Argus Camera

CAUTION: Beware of potential pinch points when closing battery lid.

BB2590/U 7.5Ah Li-Ion Battery
Take the new BB2590 battery and align it correctly with the contacts in the battery compartment.
Close the lid and use the latch to secure the battery in place.

Radio Module

CR123 Li-Ion Battery

Take the new CR123 Li-Ion batteries and insert them into the battery compartment, observing the correct polarity (+ and -). Ensure they are inserted securely and make proper contact with the device's terminals.

Once the new batteries are in place, close the battery compartment securely. Ensure any covers or panels are properly reattached to prevent dust or moisture from entering the device.

Symbols

	On/Off
	Warning – Ionizing Radiation / Key Switch ARMED
	Contains X-ray Tube
	Key Switch SAFE
	Faults LED
	Generator Status LED
	Transmission *NOTE: transmission is not a released feature of the ARGUS*
	User End System Communication
	Primary X-ray Source

Australian Office
Micro-X Limited: A14 6 MAB Eastern
Promenade, Tonsley,
South Australia 5042

MICRO-X

US Office
Micro-X Limited: 855 South 192nd St,
Suite 600, SeaTac, WA, 98148,
United States