CKGO

Instructions Manual for Household Ice Maker

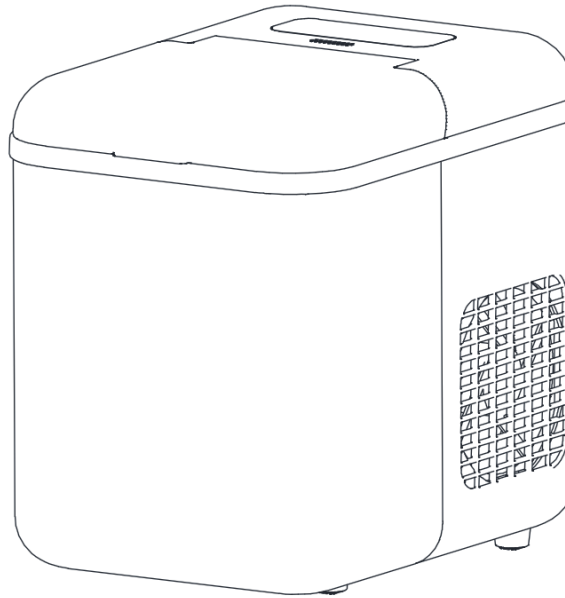

CKGO-i5

CKGO International Co., Limited

Scan the code to download the APP for the ice maker to unlock exclusive service rights.

Download the APP

Scan the QR code on the right with your mobile to download and install the APP.

01 Add device

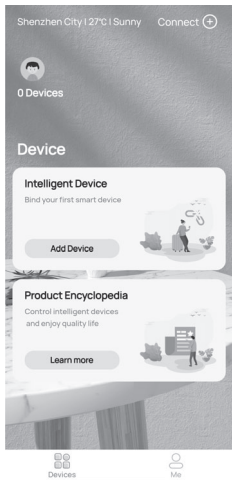

02 Get permission

03 Get permission

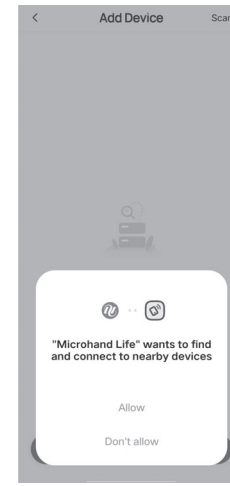

04 Search & pairing

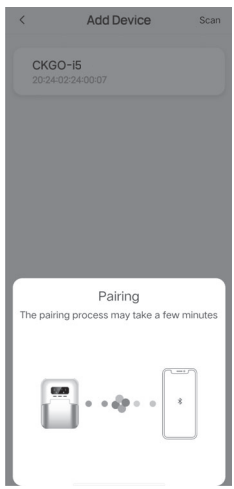

05 Paired successful

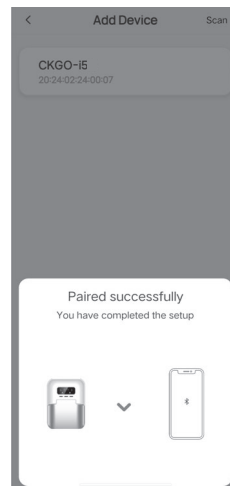

06 matching network

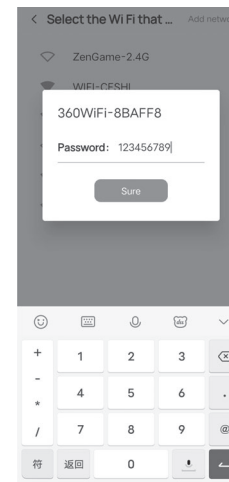

07 Configure WIFI

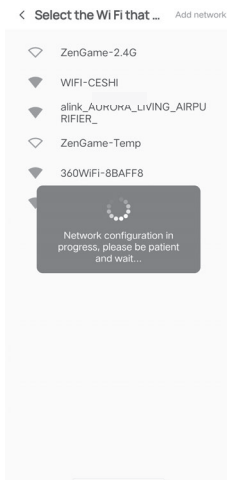

08 Networked successfully

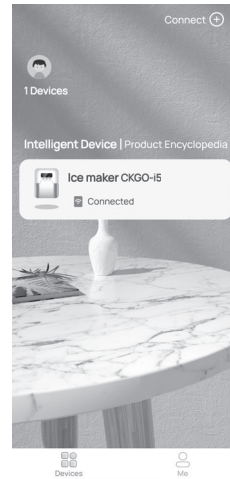

09 Enter the interface

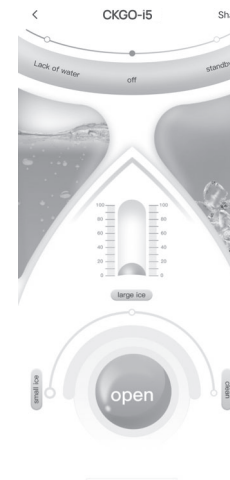

Host share scan connect to ice maker

01 Machine sharing

02 Share QR code

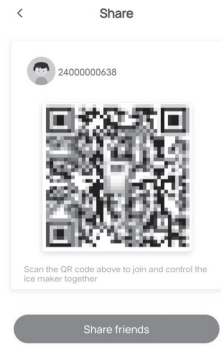

03 Scan link

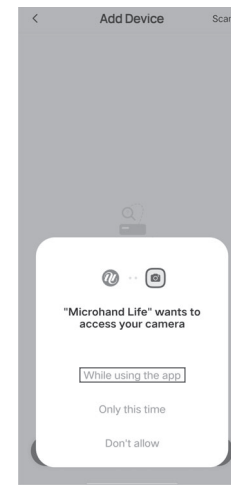

1.If the power cable is damaged, it must be replaced by the manufacturer, its service agent or similarly qualified persons in order to avoid a hazard."

2."Children should be supervised to ensure that they do not play with the appliance."

3."This appliance is not intended for use by persons (including children) with reduced physical, sensory or mental capabilities, or lack of experience and knowledge, unless they have been given supervision or instruction concerning use of the appliance by a person responsible for their safety.

Do not store explosive substances such as aerosol cans with a flammable propellant in this appliance.

5.This appliance is intended to be used in household and similar applications such as:

– staff kitchen areas in shops, offices and other working environments;

– farm houses and by clients in hotels, motels and other residential type environments;

– bed and breakfast type environments;

– catering and similar non-retail applications

6. WARNING: Keep ventilation openings, in the appliance enclosure or in the built-in structure, clear of obstruction.

7. WARNING: Do not use mechanical devices or other means to accelerate the defrosting process, other than those recommended by the manufacturer.

8. WARNING: Do not damage the refrigerant circuit.

9. WARNING: Do not use electrical appliances inside the food storage compartments of the appliance, unless they are of the type recommended by the manufacturer

10. Please accord to local regulations regarding disposal of the appliance for its flammable refrigerant and blowing gas. Before you scrap the appliance, please take off the doors to prevent children trapped.

11. When disposal of the appliance, it must be done by the manufacturer or its service agent or a similarly qualified person in order to avoid fire and other hazard.

Safety precautions:

⚠ Warning: The refrigerant used in this product is a flammable refrigerant. During maintenance, keep it away from ignition source and maintain indoor ventilation. Please do not use flammable materials near the appliance to avoid a fire.

⚠ Warning: There should be no obstacles around the appliance to keep well ventilation.

⚠ Warning: Except as recommended by the manufacturer, no appliance, equipment or other means shall be used to accelerate the defrosting process.

⚠ Warning: Do not damage the refrigeration circuit of the appliance.

⚠ Warning: Except for the type recommended by the manufacturer, no electrical appliances shall be used in the food storage chamber of the appliance.

⚠ Warning: The insulation material for the cabinet is cyclopentane, which is flammable. Please keep it away from ignition sources and prohibit combustion. It is recommended to have professional personnel handle it when it is scrapped.

⚠ Warning: Do not store explosives, such as combustion supporting sprays, in the appliance.

⚠ Warning: It can only be filled with drinking water.

⚠ Warning: The refrigeration system contains refrigerant in a high-pressure state, therefore, the refrigeration system must not be damaged, and maintenance of the refrigeration system should be carried out by professional personnel.

⚠ Warning: If the power cord is damaged, it must be replaced by professionals from the manufacturer, its maintenance department, or similar departments to avoid danger.

This appliance is used for household and similar purposes, for example:

− Kitchen areas in shops, offices, or other workplaces;
− Customers from farms, hotels, motels, and living environments;
− Family hotels;
− Catering and similar non-retail applications.

Contents

Important safety tips 2

Initial information about the ice maker 3

Operation steps and maintenance 4

Use of ice maker 4

Troubleshooting 5

Technical parameters and electrical schematic diagram 6

Exploded view 7

Important safety tips

Your personal safety and the safety of others is paramount.

We have prepared many safety tips related to this appliance for you.

Be sure to read and follow these tips.

This is the safety warning symbol:

All safety warnings are followed by this symbol or words such as "Danger" and "Warning".

Failure to follow these safety tips may cause serious injury to you.

All safety tips describe potential hazards, methods to reduce the probability of injury, and the consequences if safety tips are not followed.

Danger

Warning

When using the ice maker or during ice making, please do not touch the evaporator as it may frostbite your skin.

When using household appliances, basic safety regulations must be followed to reduce the risk of fire, electric shock, and injury to people or damage to objects. Before using this appliance, please carefully read the following safety tips.

- Do not use or operate the appliance when the power cord is damaged.
- Use the correct power socket and ensure that the power plug is fully inserted into the socket.
- During use, please do not place the power cord on carpets or insulated objects, do not cover the power cord, keep the power cord away from the walking path, and do not immerse it in water.
- We do not advocate the use of extended wires as this may cause overheating or fire. If necessary, please use extension wires of at least 1.5 square meters.
- Please cut off the power before cleaning or repairing.
- When there are children nearby, adult supervision is necessary during use.
- Please do not use flammable liquids to clean the ice maker, as this may cause a fire or explosion.
- Please do not tip over the ice maker. In case of tipping over, place the appliance upwards for 2 hours before turning it on.

In winter, in case of moving the ice maker from outdoors to indoors, please wait for a few hours before powering on to raise the temperature of the ice maker to the room temperature.

Initial information about the ice maker

CKGO-i5

1. Ice scoop: to scoop ice cubes.
2. Infrared detection ICE sensor: ice blocks the infrared reception, and the ICE lights up on the display panel.
3. Ice basket: to store and move ice cubes.
4. Upper cover: with transparent window to make the interior clearly visible.
5. Air outlet screen: to ensure smooth air outlet, it should be at least 15 cm away from objects.
6. Drain plug: to drain the water from the water tank by pulling it downwards.
7. ADD upper limit: ADD to the "MAX" scale line.
8. Control panel:
   A. ON/OFF indicator;
   B. Ice cube size selection: small or large;
   C. Cleaning function;
   D. Water shortage indication: to prompt you to add water to the water tank;
   E. ICE indicator: to indicate that the ice basket is full.

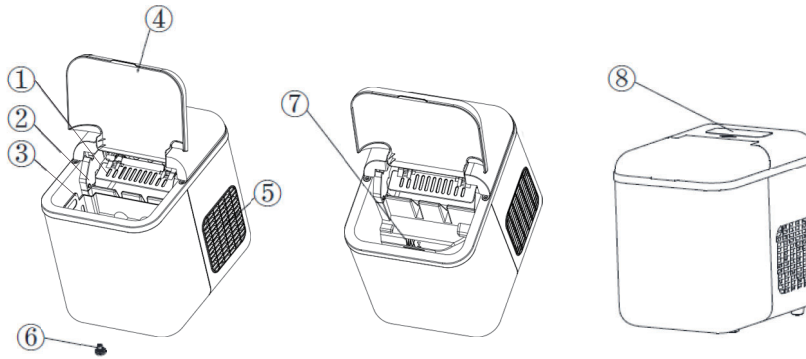

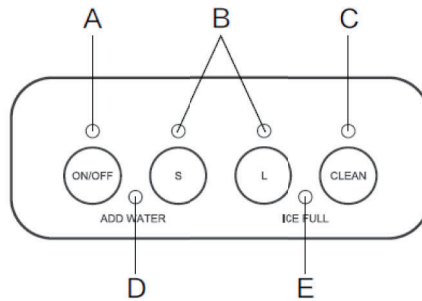

Operation steps and maintenance

Unpacking

1. Remove all inner and outer packaging. Check for ice basket and scoop. If any accessories are missing, please contact the Customer Service Department.
2. Remove the ice basket and scrub it in warm water, then clean the water tank with warm water and a soft cloth.
3. Clean the evaporator column with water or alcohol.
4. Place the ice maker in an area away from direct sunlight and away from heat sources and radiation. Place the ice maker horizontally and ensure that there is at least 15 cm of clearance on both sides and rear.
5. The ice maker is placed at a position with a suitable socket for power supply.

Powering on of ice maker

⚠ Danger

***Incorrect use of grounding wires may pose a risk of electric shock. If the power cord is damaged, please contact the After sales Service Department.**

1. For your safety, the ice maker must be reliably grounded.
2. This appliance requires a standard 110V~60 Hz grounded power supply.

Ice maker cleaning

Before using this ice maker, it is strongly recommended that you thoroughly clean the entire appliance.

1. Take out the ice basket.
2. Remove the drain plug to drain the water from the water tank.
3. Wipe the inner liner with diluted cleanser, warm water, and a soft cloth.
4. The exterior of the appliance should be regularly cleaned with diluted cleanser and warm water.
5. Dry the inner liner with another soft cloth.
6. Plug the drain plug.

When the appliance is not in use for a long time, the water in the inner container should be drained

Use of ice maker

1. If the ON/OFF indicator blinks, the device is powered ON and off. Hold down the button for 3 seconds to turn on the device and enter the ON standby state.
2. Tap to select S/L or Clean mode and hear an audio prompt to confirm the operation within 2 seconds.
3. Click to select the cleaning mode and confirm that it needs to be rinsed 5 times after execution. The S/L ice cannot be switched during the process. If the cleaning function needs to be interrupted, long press ON/OFF.
4. Ice full indicator light up prompt, please shovel the ice machine automatic ice.
5. After the light is on, please add water. After adding water, wait for 3-5 minutes and the machine will automatically continue to make ice. You can also directly press the on/off key and select S/L ice to continue making ice.

It is recommended to change the water every 24 hours to keep the water clean, if the ice machine is not used for a long time, please empty the remaining water in the water tank.

Suggestion: Use drinkable water.

Troubleshooting

Fault Symptom	Possible Causes	Solutions
The "ADD" indicator is on	1. Lack of water. 2. The filter at the bottom of the water tank is blocked.	1. Stop ice making, add water, and press the "ON/OFF" button to restart ice making. 2. Clean it.
The "ICE" indicator is on	1. Excessive ice cubes in the ice basket. 2. If the ICE indicator is not on after the ICE is full, it indicates that ICE sensor is damaged.	Stop ice making or remove ice cubes from the ice basket.
The "ICE" indicator is on	The ice scoop is stuck.	If the ice cube is stuck in the ice scoop, remove the ice cube, otherwise, please consult after-sales service personnel.
Excessive temperature alarm ON/OFF indicator blinks twice at short intervals. Stop once	1. Excessive ambient temperature. 2. Blocked heat dissipation hole.	1. Operate the appliance in an environment below 35°C. 2. Unclog the heat dissipation hole.
Ice cubes stuck together	Excessive ice making duration. Excessive immersion of the evaporator into the ice cube tray.	Stop ice making, wait for the ice to melt, restart ice making and select small ice cubes. Adjust the evaporator.
	Low water temperature in the water tank.	Replace the water in the water tank, and the water temperature is preferably between 8℃−32℃.
Normal ice making process without ice cubes formed	Excessive ambient temperature or water temperature.	Please make ice when the ambient temperature is below 32℃ and add a certain amount of cold water to the water tank.
	Leakage in the refrigeration system.	Contact after-sales service personnel.
	The refrigeration system is blocked.	Contact after-sales service personnel.
APP cannot be paired to connect and control devices	Mobile phone network exception.	Check your mobile network.
	Router network exception.	Checking Router networks.
APP cannot search for device	The distance is too far or there is no electricity.	Close to the power-on device and observe whether the ON/OFF indicator flashes regularlyelectricity
	Device exception.	Contact customer service.

Technical parameters and electrical schematic diagram

Technical parameters

Model	CKGO-i5
Climate type	US CAN JP
Safety level	I
Power	110 V~60 Hz
Rated current	1.2 A
Rated power	90 W
Refrigerant/liquid addition filling amount	R600a/18 g
Foaming agent	Cyclopentane
Net weight	6kg
Housing	Plastic PP
Appliance dimensions (W×D×H)	285×223×293 mm

Electrical schematic diagram

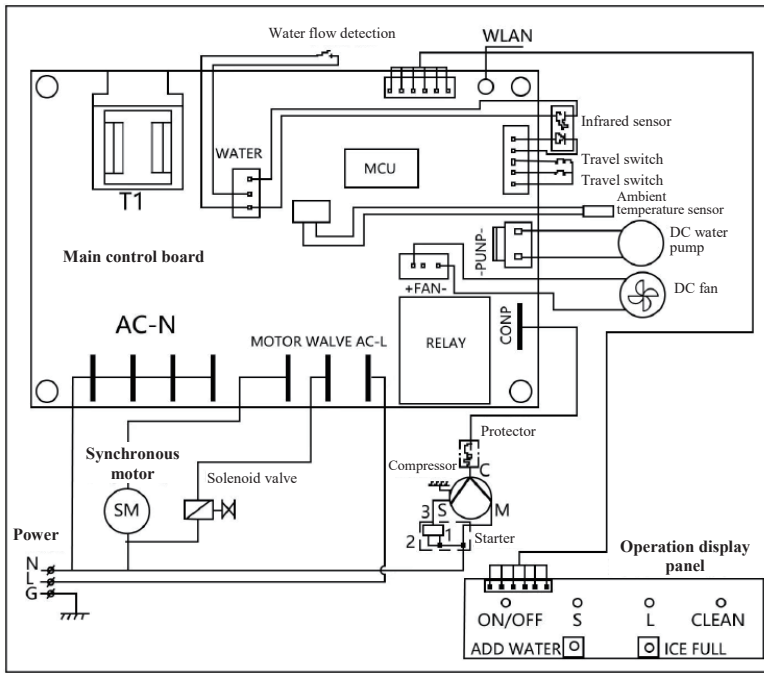

Exploded view

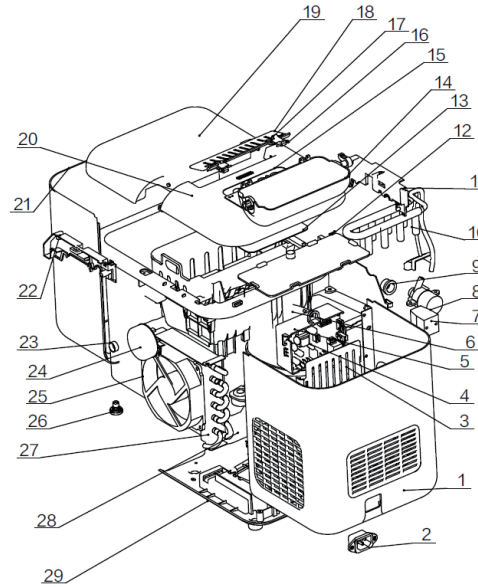

S/N	Name	Q'ty	Material	S/N	Name	Q'ty	Material
1	Rear panel	1	PP	16	Rotation shaft	4	SUS304
2	Coupler	1	Component	17	Connecting rod	2	ABS
3	Power box cover	1	ABS	18	Ice scoop	1	ABS
4	Control panel	1	Component	19	Front upper cover	1	ABS
5	Power cover	1	ABS	20	Rear upper cover	1	ABS
6	Compressor component	1	Component	21	Front panel	1	PP
7	Solenoid valve	1	Component	22	Left bracket	1	ABS
8	Water pump	1	Component	23	Shaft sleeve	1	Galvanized sheet
9	Water pump silicone sleeve	1	Component	24	Motor	1	Component
10	Evaporator	1	Component	25	Fan	1	Component
11	Right bracket	1	ABS	26	Silicone plug for water tank	1	Silicone
12	Rear lower cover	1	PP	27	Condenser	1	Component
13	Control panel	1	Component	28	U-tube	1	Red copper
14	Ice making box	1	PP	29	Pedestal	1	ABS
15	Surface sticker	1	PET				

This device complies with Part 15 of the FCC Rules. Operation is subject to the following two conditions: (1) this device may not cause harmful interference, and (2) this device must accept any interference received, including interference that may cause undesired operation.

Changes or modifications to this unit not expressly approved by the party responsible for compliance could void the user’s authority to operate the equipment.

NOTE: This equipment has been tested and found to comply with the limits for a Class B digital device, pursuant to Part 15 of the FCC Rules. These limits are designed to provide reasonable protection against harmful interference in a residential installation. This equipment generates, uses and can radiate radio frequency energy and, if not installed and used in accordance with the instructions, may cause harmful interference to radio communications. However, there is no guarantee that interference will not occur in a particular installation. If this equipment does cause harmful interference to radio or television reception, which can be determined by turning the equipment off and on, the user is encouraged to try to correct the interference by one or more of the following measures:
-- Reorient or relocate the receiving antenna.
-- Increase the separation between the equipment and receiver.
-- Connect the equipment into an outlet on a circuit different from that to which the receiver is connected.
-- Consult the dealer or an experienced radio/TV technician for help.

This device and its antenna(s) must not be co-located or operation in conjunction with any other antenna or transmitter.

Radiation Exposure Statement
To maintain compliance with FCC’s RF Exposure guidelines, This equipment should be installed and operated with minimum distance of 20cm from your body.