DLE080005-XX-2023V1

Contact us

Thank you for choosing Tinewa. If you have any questions or suggestions, please contact us:

Email: service@tinewa.com
Website: http://www.tinewa.com
We offer a warranty and lifetime free technical support.

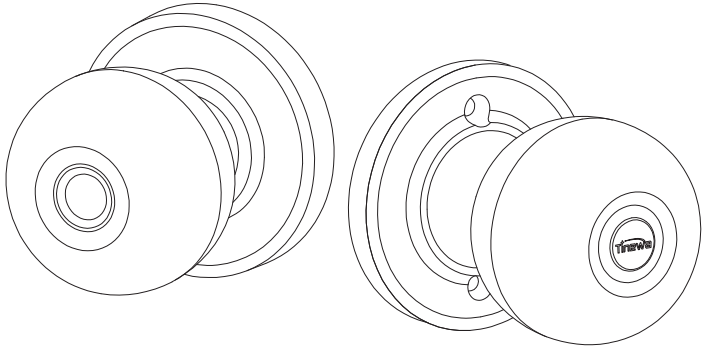

User Guide

Model:DLE903

Table of Contents

Getting Started 02

Product Description 02

Parts in the Box 03

Assembly Diagram 03

Lock/Unlock 04

Operation Instructions 05

Check the Door Dimensions 05

Installation 06

App Operation Guide 11

Keypad Programming 15

Drill Holes 15

Outstanding Functions 17

FAQ 19

Specifications 24

FCC WARNING 25

Getting Started

Product Description

Exterior Door Knob

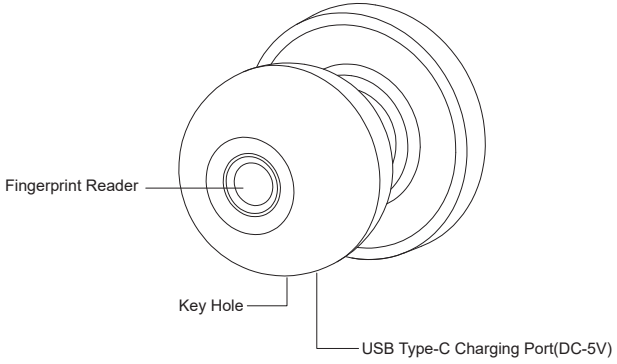

Interior Door Knob

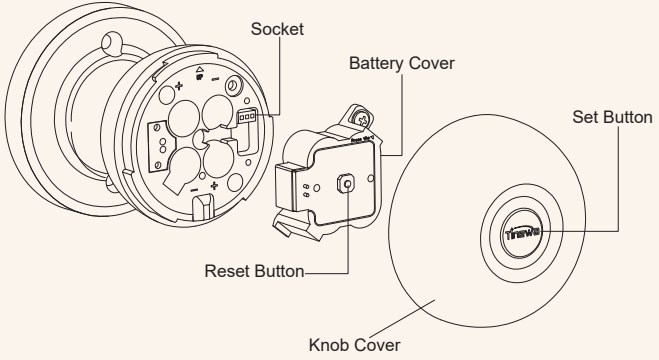

Parts in the Box

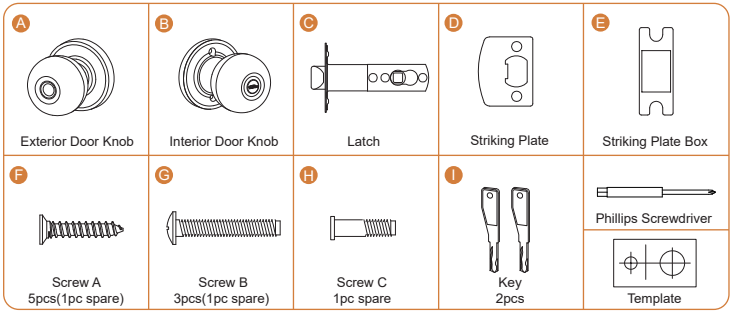

Assembly Diagram

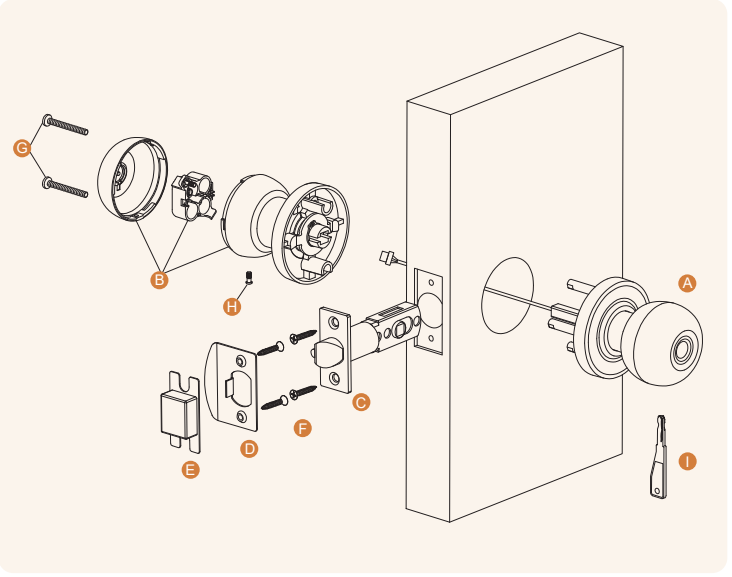

Lock/Unlock

Operation Instructions

Note: For Undrilled door, skip to “Drill Holes”(page15).

1.Check the Door Dimensions

Note: The following figures are provided for reference only. These are recommended MINIMUM value. The tolerance should be less than 2mm.

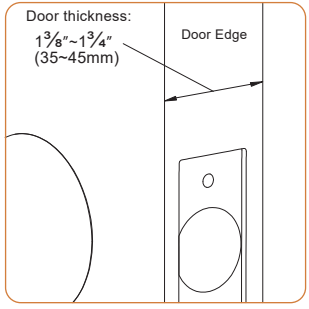

Ⓐ Door thickness:
1⅜″~1¾″(35~45mm)

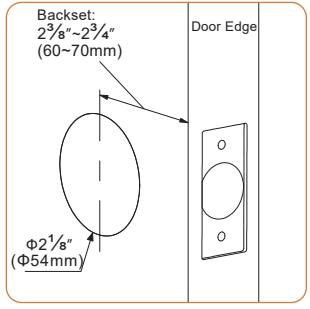

Ⓑ Bore hole: 2⅛″(Φ54mm)
Backet: 2⅜″ or 2¾″(60or70mm)

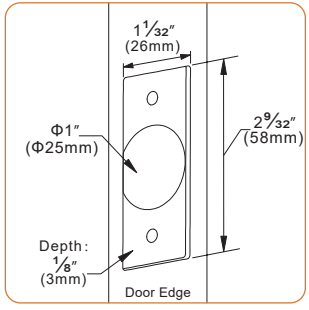

Ⓒ Check the attach faceplate:
Width-1 1/32″(26mm)
Height-2 9/32″(58mm)
Depth-⅛″(3mm)
Latch bore-1″(25mm)

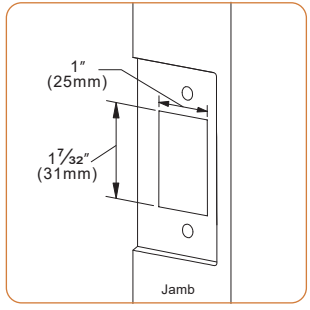

Ⓓ Check the striking plate:
Hole Width-1″(25mm)
Hole Height-1 7/32″(31mm)

2.Installation

•Adjust the Latch

The latch is initially set for 2⅜"(60mm). Keep spindle cam in correct position as illustrated. Switch to 2¾"(70mm), if your backset is 70mm. Pull it to the right to switch.

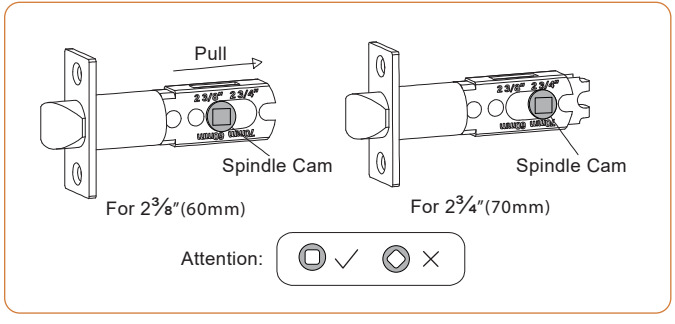

•Install Latch and Striking Plate

Please ensure the latch tongue orientation is proper.

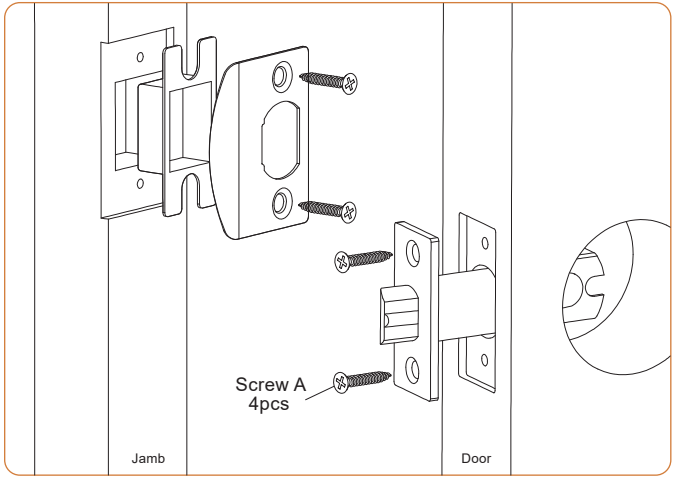

•Disassemble Battery Cover

Ⓐ Disassemble Screw C.

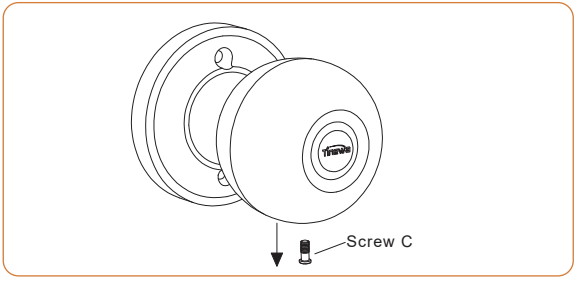

Ⓑ Rotate the interior knob cover and take it down.

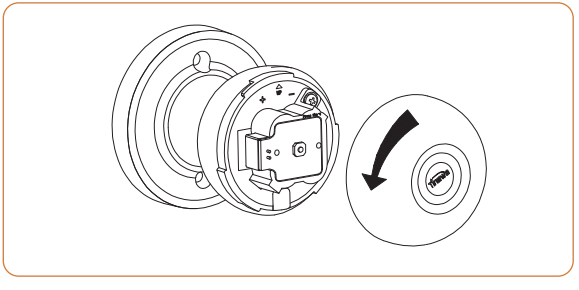

Ⓒ Disassemble Screw D and take down the battery cover.

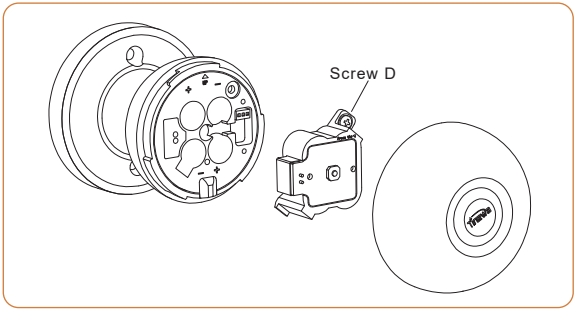

•Install Exterior Door Knob

Pass the cable through the latch and insert the spindle into the latch

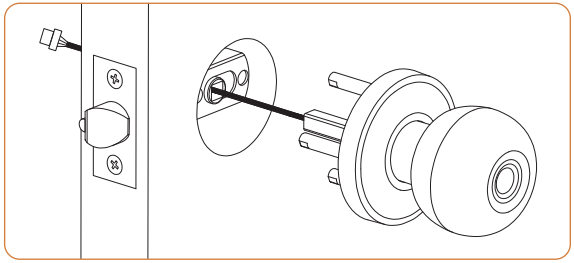

•Install Interior Door Knob

Ⓐ Pass the cable through the interior door knob.

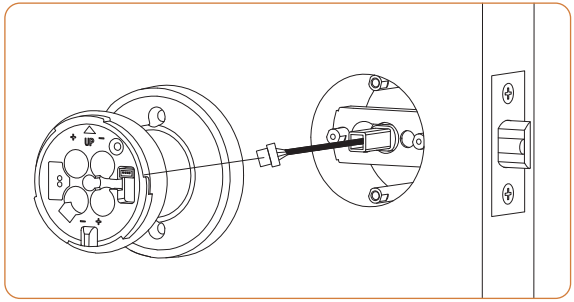

Ⓑ Secure the interior door knob with Screw B. Ensure 'UP' is up.

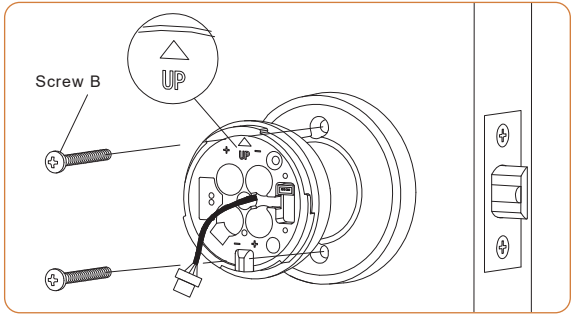

Ⓒ Insert the cable connector into the socket.

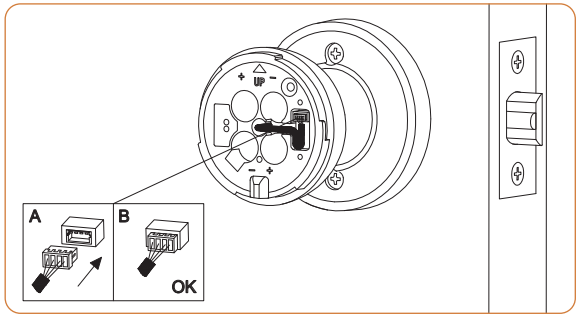

Ⓓ Insert 4*AAA Alkaline Batteries. Do not use rechargeable batteries.

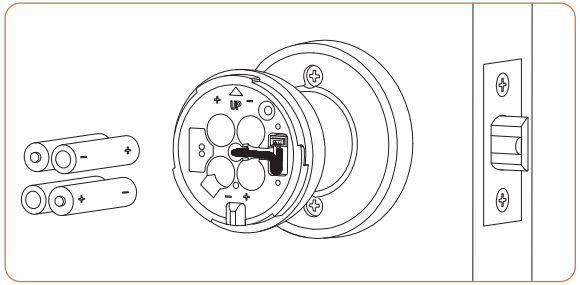

Ⓔ Secure the battery cover with Screw D.

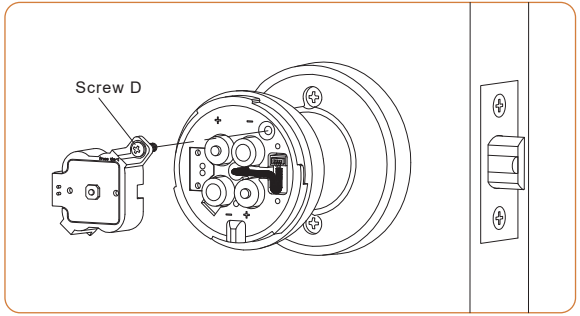

Ⓕ Reinstall the interior knob cover.

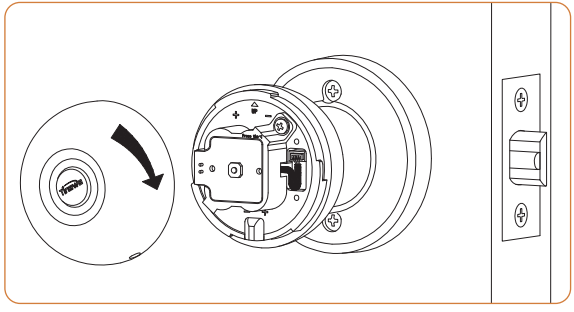

Ⓖ Secure the knob cover with Screw C.

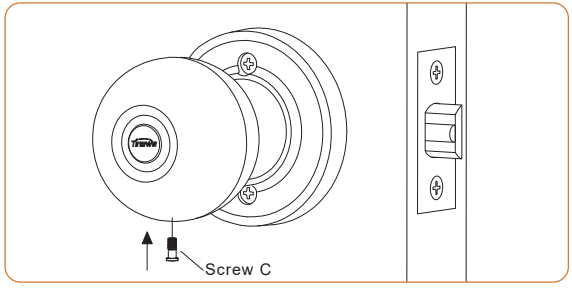

3. App Operation Guide

We recommend using app because it's easier to set and more convenient for future use. If you prefer Keypad Programming, please skip to page 15.

- **Download Tinewa App**

Option1: Search "Tinewa" in App Store for iPhone / in Google Play Store for Android to download the App.

Option2: Scan the QR code below to download Tinewa App, for both iOS(iOS 7.0 above) and Android(Android 4.3 above) system.

- **Turn on the Phone's Bluetooth and keep your phone close by the lock during the following steps.**

- **Register and Log in**

At the top right of the screen, tap "Register" as shown in the picture to register. You can use Email or Phone Number to sign up for a Tinewa account.

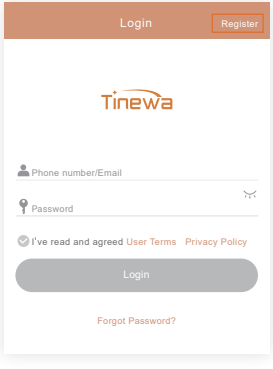

•Connect Smart Lock to Tinewa App

Tap the “+” button → Next → Press the Fingerprint Reader to activate the lock → Select the Lock, tap “+” on right → Name Your Lock → OK

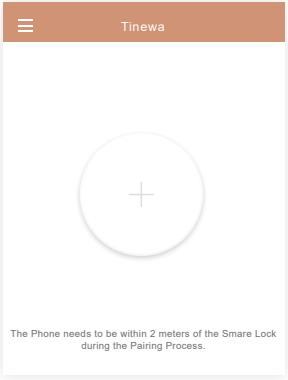

•Set your Admin Fingerprint

Fingerprints → Add Fingerprint (Please follow the steps in App.)
The first fingerprint you set is the Admin Fingerprint.

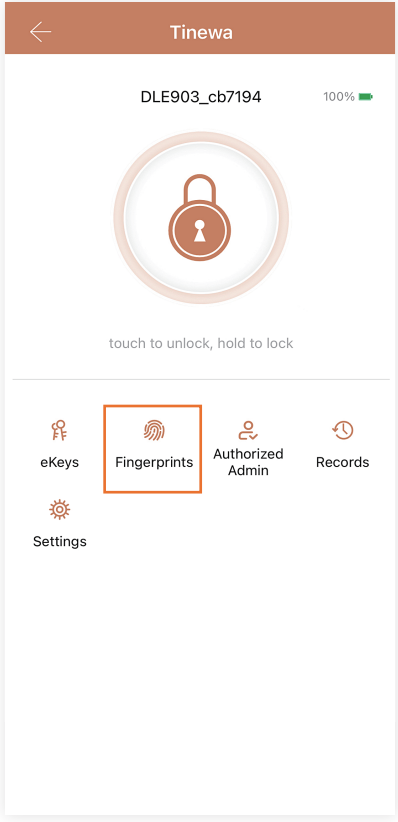

- **App Function Introduction**

1.Lock/Unlock: Touch to unlock, hold to lock. Please follow the steps in App.
2.eKeys: After registration, recipients are able to Lock/Unlock by Tinewa App. Please follow the steps in App.
3.Fingerprints: The Timed Fingerprint can be used for unlimited times within the validity period. Please follow the steps in App.
4.Authorized Admin: The authorized admin will have majority permission to operate this lock. Please seriously. Please follow the steps in App.
5.Records: It records the operations through App and Fingerprint (Keys will not included).

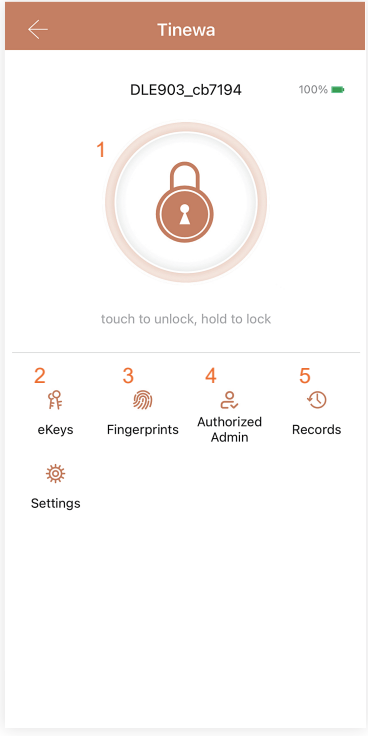

4. Keypad Programming(Set Button Tinewa)

You can use keypad to set your fingerprint, if you don't want to download the app or Tinewa App is incompatible with your current phone system version.

- **Add Admin/User Fingerprint**

Note: The lock can be unlocked by any fingerprints in the initial state.
You can set your fingerprint in succession, but only the first fingerprint you set is the Admin Fingerprint. Press the Set Button to exit setting mode.

Unlock by the Admin Fingerprint
→ Press Set Button 3 times(in 5 seconds)
→Press your fingerprint on the fingerprint reader five times(Please follow the voice prompt)
→Succeed

- **Lock/Unlock**

Lock: The lock will lock automatically in 5 seconds.(You can set the delay time on Tinewa APP)
Unlock: Fingerprint

- **Passage Mode**

Unlock → Long press Set Button for 2 seconds(in 5 seconds) → Succeed
Note: If you unlock the lock by fingerprint or App, or press the Set Button, the Passage Mode will OFF.

- **Secure Lock**

Lock → Long press Set Button for 2 seconds → Succeed
Note: Only Admin Fingerprint and Keys can unlock from the outside.
If you unlock the lock by Admin fingerprint or App, or press the Set Button, the Secure Lock will OFF.

5. Drill Holes

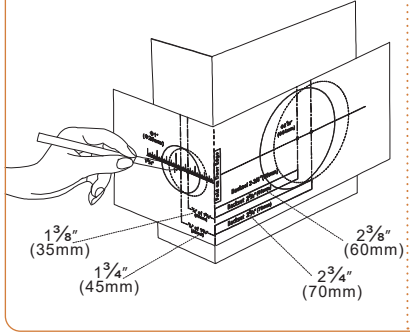

a. Choose the right template you need (for 60 or 70mm basket).
b. Fold the template at the dotted line and tape the template to the interior side of the door at 34 to 48 inch Height.
c. Measure the thickness of the door and mark the middle point of the door thickness.
d. Mark the 2⅜"or 2¾" (60 or 70mm) hole center for the backset.

Note:Make sure the two dots are at the same height.

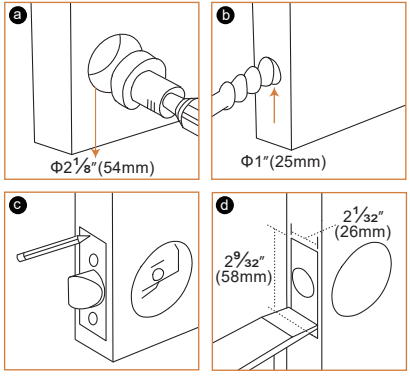

a.Drill a Dia. 2⅛"(54mm) hole for the lock body.

b.Drill a Dia. 1"(25mm) hole for the latch.

c.Insert the latch into the hole and mark the outline of the faceplate.

d.Chisel a ⅛"(3mm) deep hole.

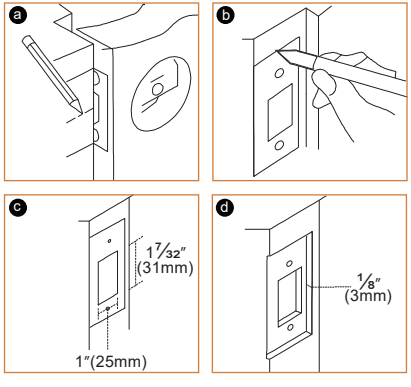

a.Close the door with the latch installed and mark lines on the door jamb as shown in figure a.

b.Align the striking plate with the lines.
Draw the shape of the striking plate.

c.Drill a ⅝"(16mm) deep hole in the middle of the striking plate.

d.Chisel ⅛"(3mm) deep for the striking plate.

Outstanding Functions

1.Diversified Unlock Permissions

Grant specific permissions according to usage scenarios

1.1 Permanent: eKeys//Fingerprints applicable. Grant permanent access.

1.2 Timed: eKeys/Fingerprints applicable. Grant access for a few weeks, a few hours, or a few minutes.

1.3 Recurring: eKeys applicable. Grant access for fixed time period of every day, every week or every month.

2.Automatic Locking

The lock will lock automatically after the time. Without any additional operation.

Operation: Settings → Auto Lock(5-60s, Customize)

3.Adjustable Lock Sound

Choose to increase or decrease the volume according to your needs.

Operation: Settings → Lock Sound

4.Monitor Activity Remotely

You can receive unlock reminder(sound/notificaton) remotely or view the unlock record remotely when users use the eKeys to unlock. If you also want this function for other unlocking methods, an additional gateway is required

Operation: Settings-Unlock Notification/Messages

5.Manage Access Real time

You are allowed to unlock remotely by turning on the Remote Unlock.

Operation: Gateway/Settings-Remote Unlock

(NOTE: Purchase the Gateway separately.)

6.System Locked automatically for Security

The lock system will be temporarily locked, if somebody enter incorrect fingerprint TEN times. In this case, you can only unlock with the Tinewa App or wait THREE minutes.

7.Unlock in an Emergency

Unlock your Smart Lock using a portable battery when it is out of power.

8.Low Battery Warning

a.In the battery low status, there will be a voice reminder while the keypad activated.
b.The battery percentage can be viewed in the Tinewa App. The icon will turn red when the percentage under 25%.

9.Ready For All Weathers

With an IP54 weatherproof rating, Smart Lock built to withstand low and high temperature (-4°F～158°F).

10.Multiple Locks Management

You are allowed to manage variety of Tinewa smart locks by Tinewa App.
Operation: Add Lock.

11.Multilingual Support

Tinewa App offers multilingual support.
Operation: App Settings-Languages.

12.One click transfer

Transfer all data of the selected lock(s) to the recipient permanently. In this case, you don't need to reset the lock if the admin of the lock changes.
Operation: App Settings-Transfer Lock(s)

13.eKeys/Fingerprints Management

You can rename eKey/Fingerprint, delete it and change the validity period in the Info page.
Operation: eKeys/Fingerprints

FAQ

1.How to reset the lock?

Method 1:

If you are a Tinewa Bluetooth Administrator, in the Settings, you can delete the lock from your account.

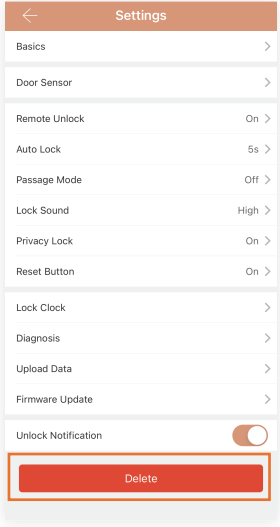

Method 2:

a. Re-plug the cable or reinstall the batteries.
b. Long press the Reset Button for 10 seconds immediately.
c. On hearing beeps and voice prompt "admin deleted successfully" RESET was successfully.

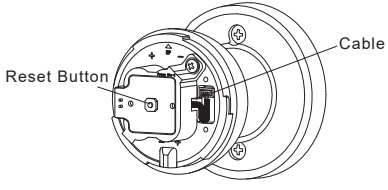

2.Why I can't pair my Lock with Tinewa App?

Step 1: Ensure you have turn on your phone' s Bluetooth.

Step 2: Press the fingerprint reader to activate the lock.

Step 3: If you have set the Admin Fingerprint on the keypad already, the lock would be absent on the APP. In this case, please unlock by Admin Fingerprint → Press Set Button 3 times(in 5 seconds) → The lock can be paired now.

3.I set a timed eKey/ fingerprint between13:00-17:00, but it still works at 18:00.

Under this circumstance, please calibrate the lock time via Lock Clock

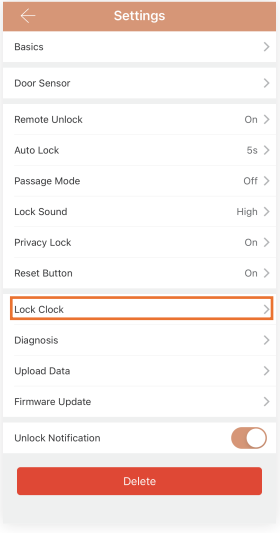

4.Why the Record Page didn't show all lock/unlock records?

If the records didn't update in a timely manner, you can refresh records at up right near the lock. You have to connect a gateway, if you want to receive the records remotely.

5.Why the fingerprint I set on the Lock doesn't show in my Tinewa App?

In this case, please upload data from lock to App. It may take several minutes, please be patient.

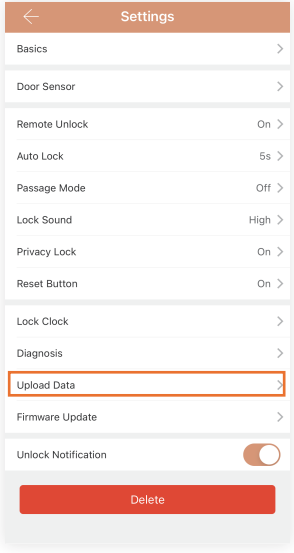

6.Why the Secure Lock Button doesn't work?

Check the Privacy Lock Function in the Settings. The Secure Lock Button is disabled when Privacy Lock is OFF.

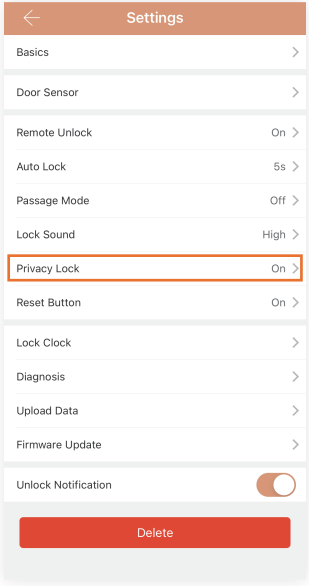

7.Invalid Fingerprints/ eKeys are so annoying but I don't want to delete them or it's too much hassle to delete them one by one.

Under this situation, you can turn on the Hide Invalid Access in App Setting.

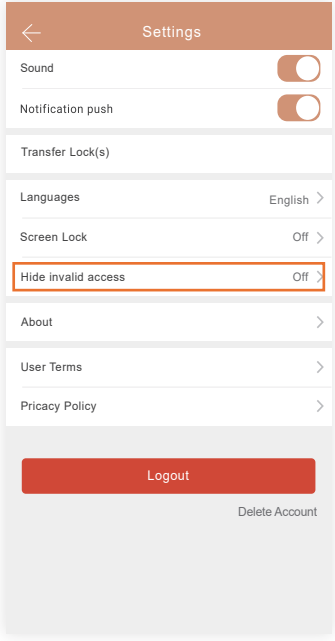

Specifications

Material	Interior Knob	Zinc Alloy
	Exterior Knob	Zinc Alloy
Product Dimensions	Interior Knob	D_{rose}×D_{knob}×H Φ70×Φ58×80mm
	Exterior Knob	D_{rose}×D_{knob}×H Φ70×Φ58×71mm
Unlocking Method	APP、Fingerprint、Key	
Mobile Phone App	Tinewa	
Working Temperature	Interior Knob	14°F～122°F
	Exterior Knob	-4°F～158°F
Working Humidity	15% ~ 95%	
Support Phone System	Android 4.3 / IOS 7.0 or above	
Fingerprint	Fingerprint capacity	50 pcs
	Verification Time	< 2 S
Waterproof	IP54	
Battery	4*AAA (NOT provided)	
Door	Applicable Door Type	Metal or Wood
	Applicable Door Thickness	35~45mm

FCC WARNING

This device complies with part 15 of the FCC Rules. Operation is subject to the following two conditions:
(1) this device may not cause harmful interference, and
(2) this device must accept any interference received, including interference that may cause undesired operation. Any changes or modifications not expressly approved by the party responsible for compliance could void the user's authority to operate the equipment.

NOTE: This equipment has been tested and found to comply with the limits for a Class B digital device, pursuant to Part 15 of the FCC Rules. These limits are designed to provide reasonable protection against harmful interference in a residential installation. This equipment generates, uses and can radiate radio frequency energy and, if not installed and used in accordance with the instructions, may cause harmful interference to radio communications.
However, there is no guarantee that interference will not occur in a particular installation. If this equipment does cause harmful interference to radio or television reception, which can be determined by turning the equipment off and on, the user is encouraged to try to correct the interference by one or more of the following measures:
-- Reorient or relocate the receiving antenna.
-- Increase the separation between the equipment and receiver.
-- Connect the equipment into an outlet on a circuit different from that to which the receiver is connected.
-- Consult the dealer or an experienced radio/TV technician for help.
To maintain compliance with FCC's RF Exposure guidelines, This equipment should be installed and operated with minimum 20cm distance between the radiator and your body: Use only the supplied antenna.