USER MANUAL

Electric Mica Space Heater With WIFI

HP2401-15DWM

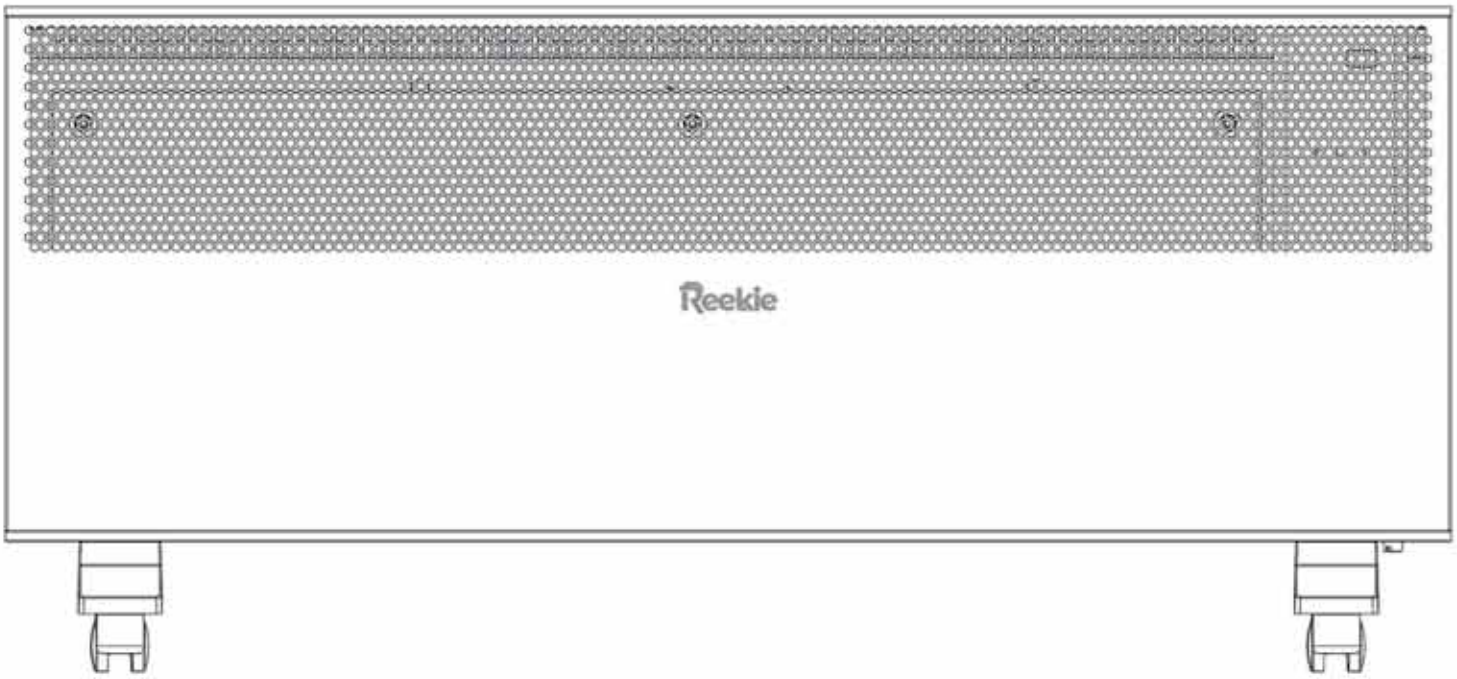

Important Safeguards

Read carefully before attempting to assemble, install, operate or maintain the product described.

Protect yourself and others by observing all safety information.

ELECTRIC MICA SPACE HEATER

MODEL NO: HP2401-15DWM

- **The first time you use this heater, or after a long period of storage, please let run at least 3 minutes to eliminate the "new smell." This smell is caused by moisture absorption by the heating element. It smells similar to leather that has been stored for a long time. Please do not worry, the smell does no harm to your health or to the heater. If you are sensitive to the smell, please open a window or door to disperse the smell when using for the first-time.**
- **All components of this heater comply with ROHS and CA-65 eco-friendly standards.**

RoHS Compliant

This heater is intended for use as supplemental heat, not a main heat source.

This heater is not suitable for use in agriculture facilities or areas where livestock, poultry, or other animals are confined.

This heater is not designed for preserving precision industrial or laboratorial instruments, or artwork or other sensitive documents.

PROTECT YOURSELF AND OTHERS BY OBSERVING ALL SAFETY INFORMATION IN THIS USER MANUAL.

FAILURE TO COMPLY WITH INSTRUCTIONS COULD RESULT IN PERSONAL INJURY AND/OR PROPERTY DAMAGE!

CONTENTS

CONTENTS 01

SPECIFICATIONS 02

IMPORTANT SAFEGUARDS 02

PRODUCT INTRODUCTION 06

FOOT INSTRUCTIONS 07

WALL MOUNTING INSTRUCTIONS 09

OPERATING INSTRUCTIONS 11

REMOTE CONTROL 15

WIFI CONTROL 16

SAFETY FEATURES 21

CLEANING AND STORAGE 21

TROUBLE - SHOOTING 22

WARRANTY INFO 22

SPECIFICATIONS

Model: HP2401-15DWM

Heating Principal: Radiation (Far-infrared) + Convection

Estimated Heating Area: 170sq.ft(16m²)

Power Supply: 110~120V 60Hz,

Power Consumption: 1500W 12.5A max (Hi-Lo)

Control Method: WIFI APP + Remote Control

Temperature Range: 41°F-97°F

Noise Level: ≤23dBA

IMPORTANT SAFEGUARDS

WARNING | **High-power Electrical Appliance**

When using any high-power appliance, basic safety precautions should always be observed to reduce the risk of fire, electric shock, and/or injury to persons.

Read all instructions carefully before using the appliance.

DANGER | **Failure to observe warnings may result in life-threatening injury by electric shock.**

- Please make sure the operating voltage is the same as labeled. After installing the castor wheels, plug the unit into a 120V AC socket–outlet.

- **POLARIZED PLUG**
  This product is equipped with a polarized plug (one prong is wider than the other). For your safety, please insert the plug correctly. If you are unable to insert the plug into the electrical outlet, try reversing the plug. If the plug still does not fit, contact our customer service team

IMPORTANT SAFEGUARDS

- Avoid overloading your circuit by not using other high wattage appliances in the same outlet. At 1500 Watts, this unit draws 12.5Amps.

- Always plug the unit into a separate wall outlet/receptacle. DO NOT use relocatable power taps (outlet/power strip).

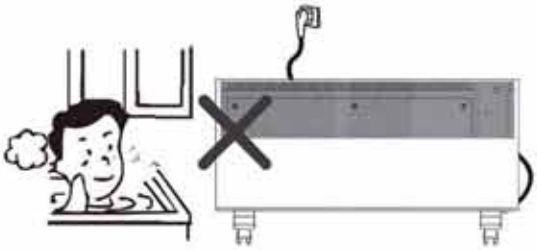

- This heater is not intended for use in bathrooms, laundry rooms, and similar indoor enclosed locations. DO NOT operate it near a bathtub or other water containers.

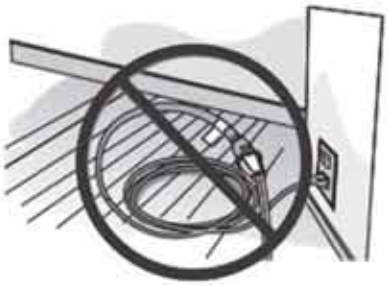

- The use of an extension cord is not recommended, as it may overheat during the operation of the heater.

- DO NOT operate the unit if the power cable has been damaged.

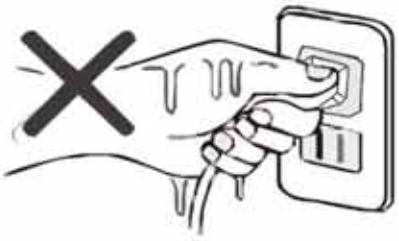

- DO NOT operate or unplug the heater if your hand is wet.

IMPORTANT SAFEGUARDS

- ATTENTION: In order to avoid any danger caused by an accidental resetting of the safety system, this appliance must not be powered through an external timer.

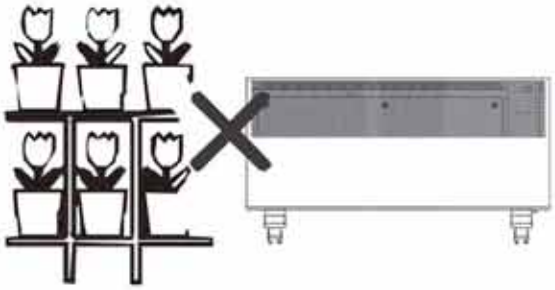

- DO NOT use the heater outdoors.

- DO NOT place the heater directly under a power outlet.

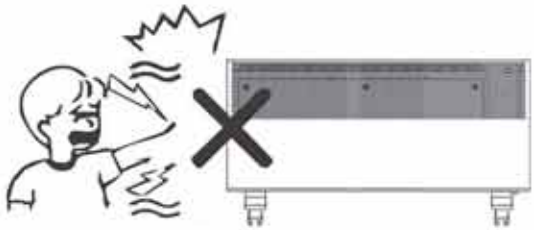

- DO NOT insert or allow foreign objects to enter any ventilation or exhaust opening as this may cause an electric shock, fire, or damage to the heater.

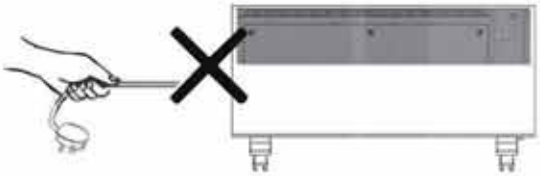

- DO NOT pull the power cord directly to move the machine to avoid malfunctioning.

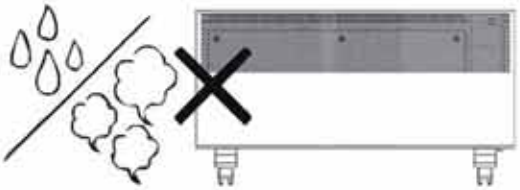

- DO NOT use or store in long-term damp and dusty places to avoid events such as shell corrosion or leakage caused by humidity.

IMPORTANT SAFEGUARDS

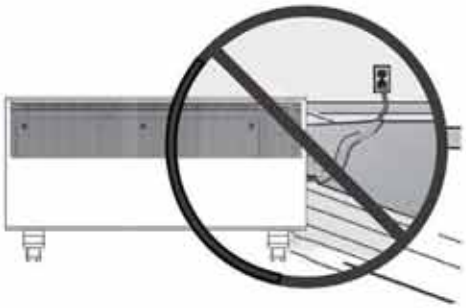

- DO NOT place any objects on the power cord. DO NOT run the power cord under carpeting, throw rugs, runners, or similar coverings. TRIPPING HAZARD: Arrange the power cord away from high volumes of foot traffic.

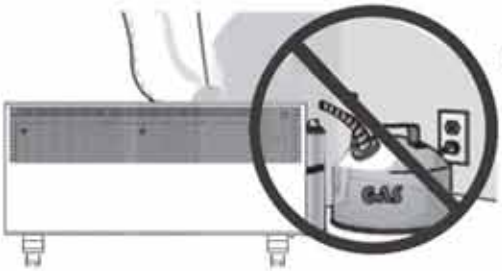

- If the plug and outlet overheat, turn off the unit and contact our customer service team.
- Always unplug the heater when not in use for a long time.
- The heater has hot and arcing parts inside. DO NOT use it around gasoline, paint, or other flammable liquids or gasses.

- The appliance is not intended for use by inexperienced operators, children, or persons with disabilities, unless they are supervised or given instructions by a person responsible for their safety. Children should be supervised to ensure that they do not play with the appliance.

- Only use the heater in an upright position. Always place the heater on a stable, flat, level surface to prevent the heater from overturning. Make sure the angle of the surface where the heater located is less than 10°.

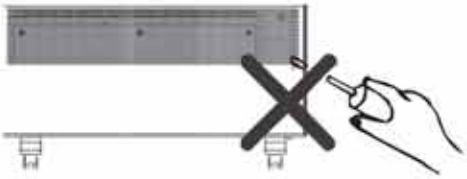

- DO NOT attempt to repair or adjust any electrical or mechanical functions on this unit. Doing so will void your warranty. The inside of the unit contains no user serviceable parts. All servicing should be performed by qualified personnel only.

IMPORTANT SAFEGUARDS

Burn and Fire Warning

Failure to observe this warning could result in burns or scalds.

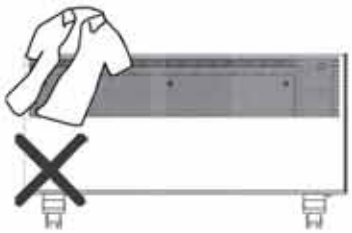

- DO NOT cover the heater during operation. Doing so will overheat the appliance. DO NOT use the heater to dry laundry.

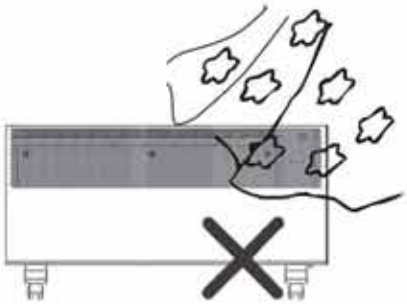

To prevent a possible fire:

- DO NOT use the heater on soft surfaces (such as on a thick rug or on a bed)
- DO NOT use the heater close to curtains.

PRODUCT INTRODUCTION

FRONT

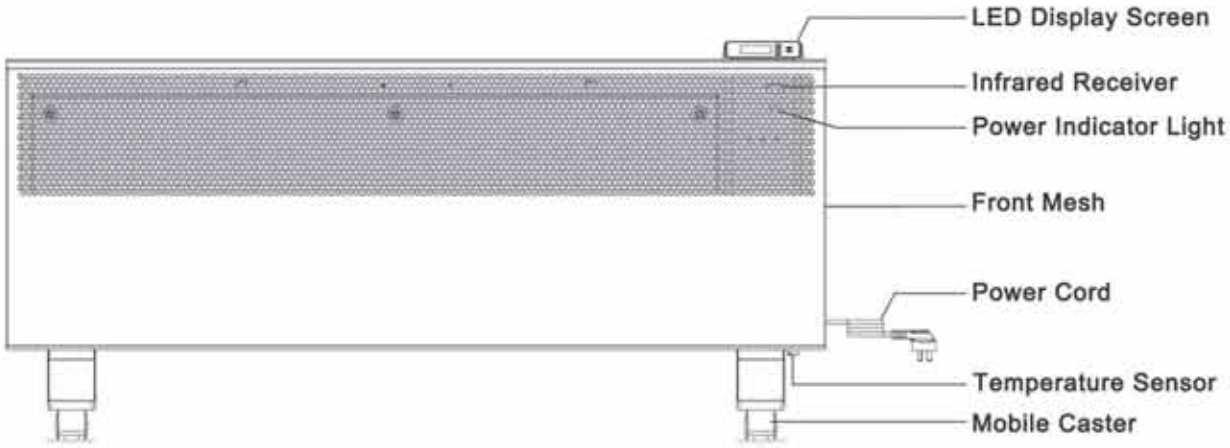

PRODUCT INTRODUCTION

BACK

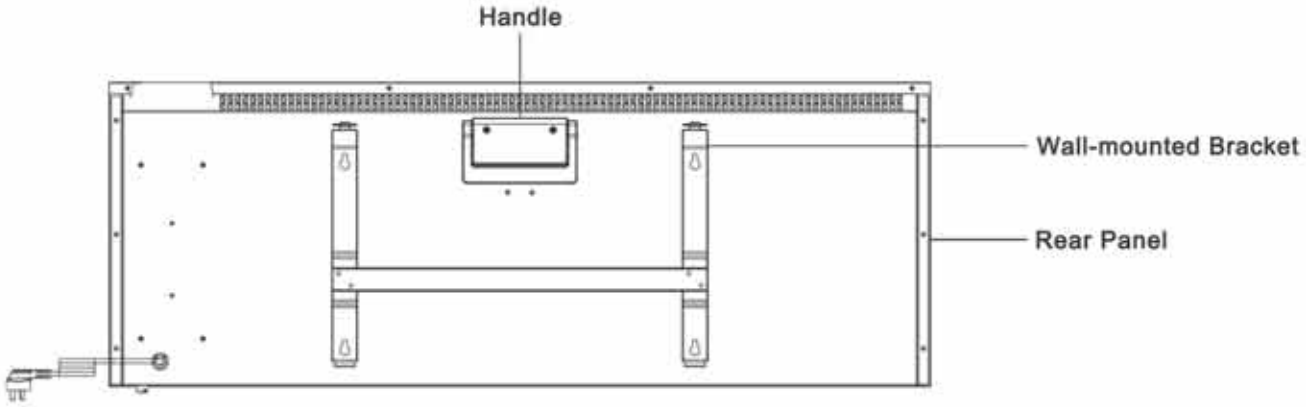

*The wall bracket is already installed. You can pull out and detach the bracket by pressing on the protruding part above the bracket

FOOT INSTRUCTIONS

Before using this heater, it must either be wall mounted or have the feet fitted.

NOTE: The wall bracket edges may be sharp. It is recommended that if using as a freestanding appliance please remove the wall bracket from the back of the heater.

BEFORE YOU INSTALL:

- Make sure the heater is unplugged and power switches are off.
- Carefully turn the main body upside-down on a scratch-free and stable surface.
  Be careful to prevent damage to the cosmetic finish or your floor surfacing.

Foot Board/Wheels (2 PCS)	Foot Screw M5*20mm (4 PCS)
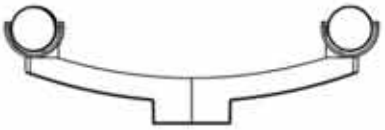	

FOOT INSTRUCTIONS

FOOT INSTALLATION

1. Unwrap the package.
2. Place the heater upside down.
3. Attach the mobile caster wheels with a screwdriver.
4. Place the unit in its upright position.

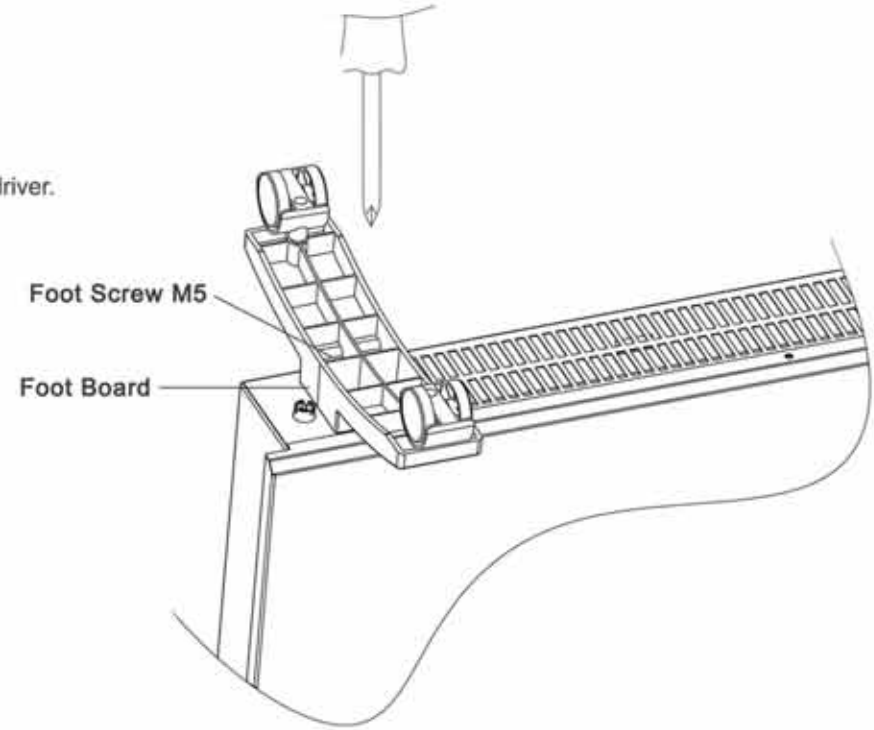

TOOLS REQUIRED

#2 Phillips Screwdriver

POSITIONING THE HEATER

- The heater must be positioned at least 0.66 feet (0.2m) away from the wall.
- Keep combustible materials, such as furniture, pillows, bedding, papers, clothes, and curtains, at least 0.66 feet (0.2m) from all sides of the heater.
- Make sure there is at least 3.28ft (1m) of open space above the heater.

POSITIONING TEMPLATE

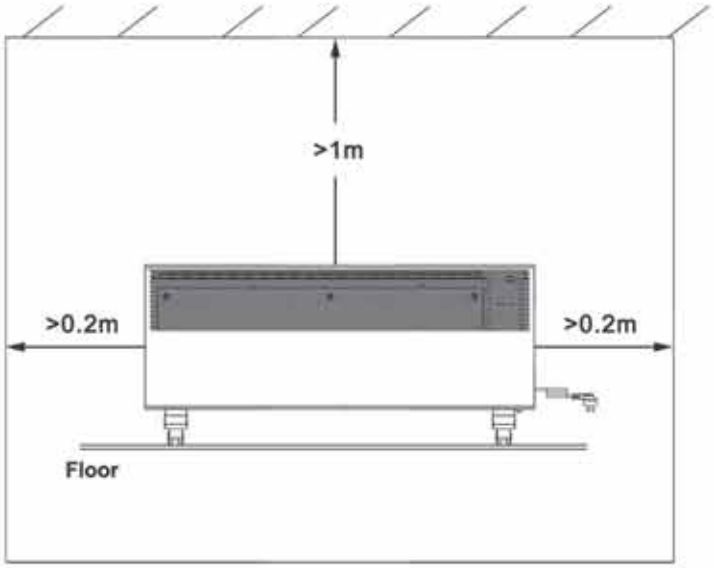

WALL MOUNTING INSTRUCTIONS

NOTE:

1.Refer to minimum clearances adjacent as a guide to the correct location of the heater.
2.Position the unit within one meter of wall socket. Do not mount in front of or below the wall socket.

BEFORE YOU INSTALL:

Before drilling holes into the wall, check if there are not any cables passing nearby.

- Make sure the heater is unplugged and power switches are off.
- Dismount the foot base off the appliance.

Wall-mounted Bracket (1 PCS)	Plastic Expansion Screw (4 PCS)	Wall Mounting Screws (4 PCS)
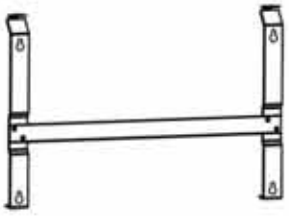	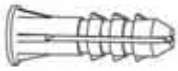	

WALL-MOUNTED INSTALLATION

1.Drill into the wall holes with the proper size.
The distance between the horizontal centers is 368.5mm and vertical center spacing is 252mm. Mark the hole positions with a pencil and check they are horizontal with a spirit level. Ensure the two bottommount holes are at least 450mm from the floor and drill holes as required.

2.Put the plastic expansion screws into the wall and fix the wall bracket with the wall mounting screws to the wall securely.

3.Insert the back of the device into the mounting bracket.
First find the bottom plugalign and insert it, then align the upper hole and push it toward the wall. You canpress down on the protruding part above the bracket so that the bracket slot canbetter enter the hole position.

4.Plug appliance into a standard 120 volt AC electrical outlet.

WALL MOUNTING TEMPLATE

Refer to the drawing below for minimum clearances

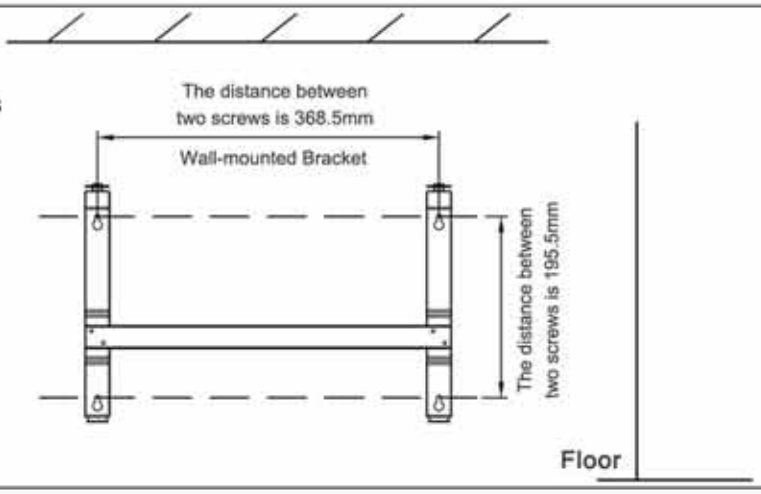

Please refer to this mounting template for hole size and distance

WALL MOUNTING INSTRUCTIONS

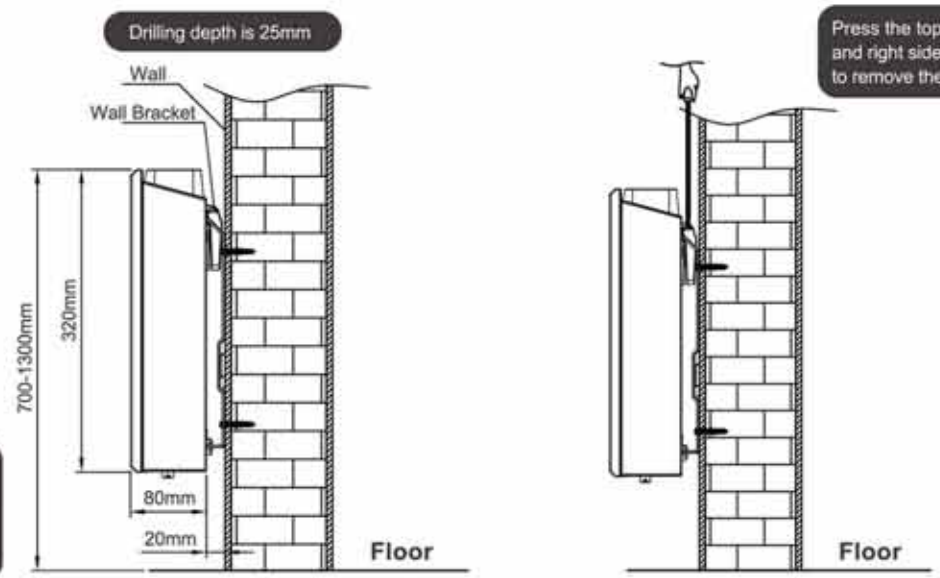

NOTE:
The minimum space between the top side and the ground is 0.7 meters, and the maximum is 1.3 meters.

- The heater must be positioned at least 0.66 feet (0.2m) away from the wall.
- Keep combustible materials, such as furniture, pillows, bedding, papers, clothes, and curtains, at least 0.66 feet (0.2m) from all sides of the heater.
- Make sure there is at least 3.28 ft (1m) of open space above the heater.

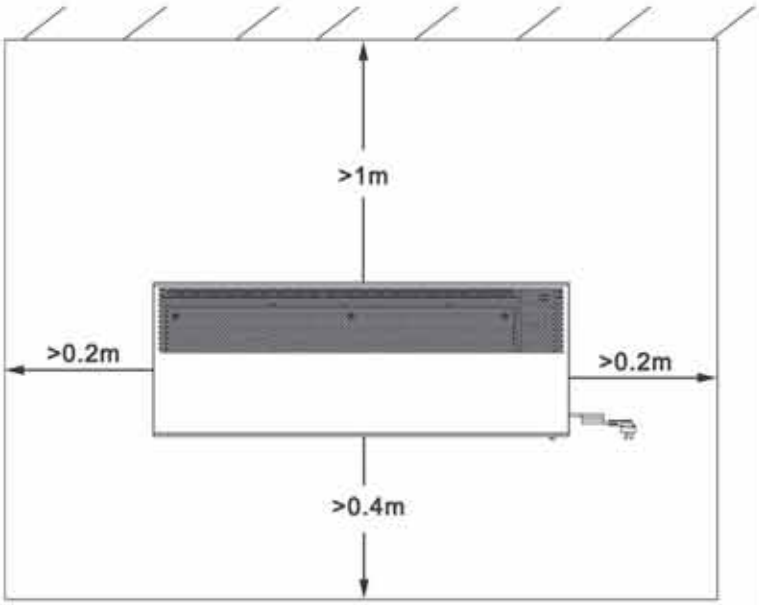

OPERATING INSTRUCTIONS

CONTROL PANEL

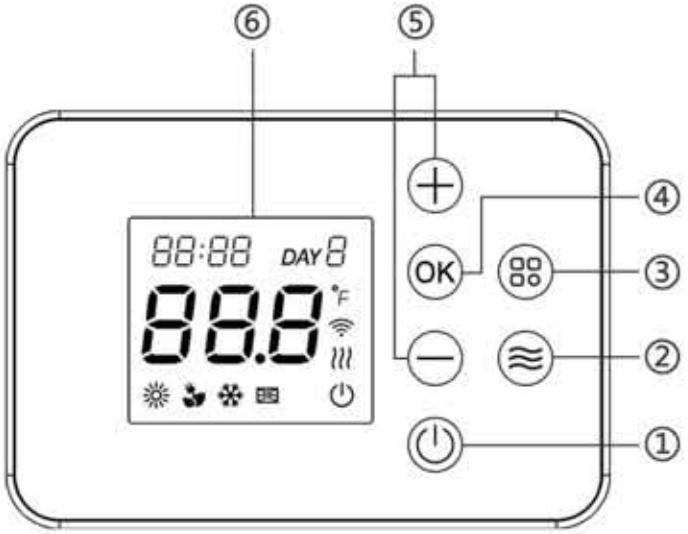

① Power Button

② Heating Setting Button

③ Mode Setting Button

④ OK Button

⑤ Temperature And Time Control

⑥ Display Screen

SCREEN INDICATION

Comfort Mode: The default value is 68℉ (20℃)

ECO Mode: The default value is 64℉ (18℃)

Anti-forst Mode: The default value is 41℉ (5℃)

Open Window Mode: Detect the room temperature automatically and switch to anti-forst or comfort mode

Heating Power Level: There are three gears (600W-900W-1500W)

Display Temperature: Display target or room temperature

Display Time: Display hours and minutes

Display Day: Display 1-7 days (from Monday to Sunday)

Wi-Fi Symbol

Power Indicator Symbol

OPERATING INSTRUCTIONS

While the unit is powered on, the buzzer 'drops', all the ICONS on the display screen light up for 3 seconds, and then enter the standby mode. The display screen displays ⏻ as below:

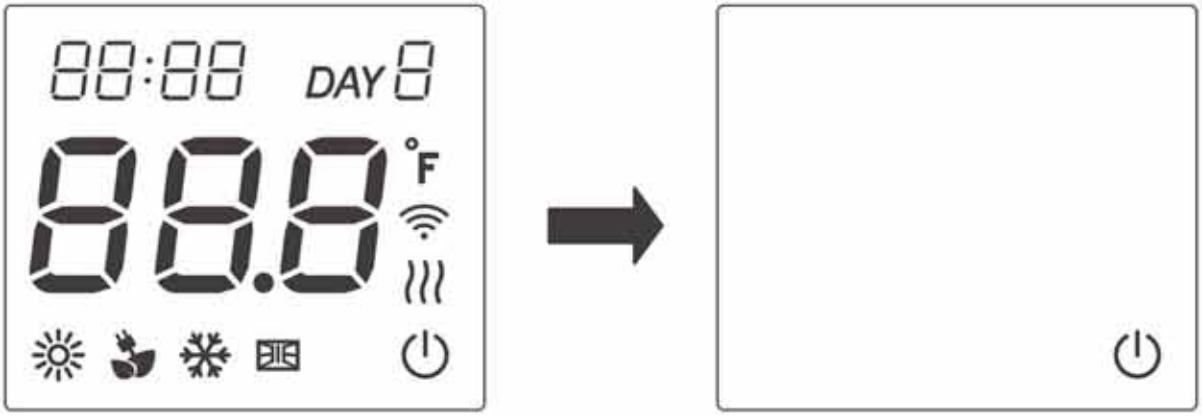

ON/OFF (Remote Control Available)

- Plug in the power plug and enter standby mode.
- In standby mode, press the power button on the operation panel to enter the comfortable heating mode.
- In heating mode, press the on/off button to switch to standby mode.

MODE SETTING

- Press button to choose five modes as below:

	Comfort Mode
	ECO Mode
	Anti-forst Mode
	Open Window Mode
	Manual Mode

symbol means Comfort Mode

symbol means ECO Mode

symbol means Anti-forst Mode

symbol means Open Window Mode

After Open Window mode, pressing it's Manual Mode, and no symbol illuminate on the digital display panel.

NOTE: It enters into manual mode automatically after pressing Up or Down button during operation, then all mode symbols are not displayed.

HEAT SETTING (Remote Control Available)

- Press the button to set the heating level option ≀, ≀≀, ≀≀≀, the default heating level is ≀≀≀.

IMPORTANT SAFEGUARDS

A. ≀ =level 1 power 600W

B. ≀≀ =level 2 power 900W

C. ≀≀≀ =level 3 power 1500W

- The heater will automatically stop heating after working continuously for 24 hours, with the display screen not showing the power level symbol automatically. Press any key manually to restore to the settings before heating stopped.

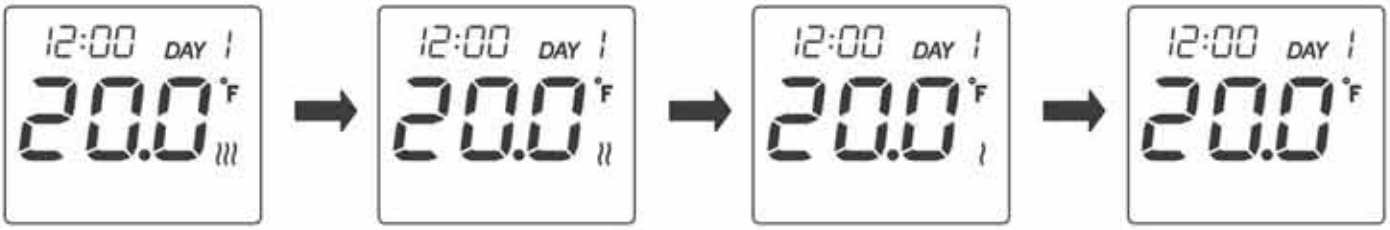

TEMPERATURE SETTING (Remote Control Available)

- Press the button (+) and (−) to set your desired temperature from 41°F to 97°F. If no operation for 5 seconds, it will be automatically saved or you can press the (OK) button to save immediately.
- Manual mode is available (When the (+) or (−) button is pressed, all mode icons are not displayed). The default temperature is 77°F with ≀≀≀ heating level.

CLOCK SETTING

- Hold down the button (⊞) and (≋) for 3 seconds, there will be buzzing for 1.5 seconds and enter clock settings. The display will only shows 88:88 DAY 8 and the default start time is 12:00 DAY 1 (Monday). It will also show last record data as there is memory record.
- Press the button (+) or (−) to select the hour (0-23), then press (OK) button to confirm and proceed to the minute setting.
- Press the button (+) or (−) to select the minute (0-59), then press (OK) button to confirm and proceed to the day setting.
- Press the button (+) or (−) to select the day 1-7 (Monday to Sunday), then press (OK) button to confirm.

COMFORT MODE ☼ (Remote Control Available)

- Press the button (⊞) until the icon ☼ flashes and the temperature is displayed at 68°F for 3 seconds to enter the comfort mode, or press the (OK) button to enter. the default temperature for comfort mode is 68°F with ≀≀≀ heating level.
- When the comfort mode is successfully entered, the temperature display will change from the default value to the ambient temperature.
- When the temperature reaches the target temperature, the heating level will be automatically switched to ≀ level power heating.
- In Comfort mode, the icon ☼ is always on.

OPERATING INSTRUCTIONS

ECO MODE (Remote Control Available)

- Press the button continuously until the icon flashes and the temperature is displayed at 64°F for 3 seconds, then enter the ECO mode or press the OK button to enter, the default temperature for ECO mode is 64°F with heating level.
- When the comfort mode is successfully entered, the temperature display will change from the default value to the ambient temperature.
- When the temperature reaches the target temperature, the heating level will be automatically switched to level power heating.
- In ECO mode, the icon is always on.

ANTI-FORST MODE (Remote Control Available)

- Press the button continuously until the icon flashes and the temperature is displayed at 41°F for 3 seconds, then enter the anti-forst mode or press the OK button to enter, the default temperature for anti-forst mode is 41°F with heating level.
- When the comfort mode is successfully entered, the temperature display will change from the default value to the ambient temperature.
- When the temperature reaches the target temperature, the heating level will be automatically switched to level power heating.
- In Anti-forst mode, the icon is always on.

NOTE:

In all modes(except Open Window mode),

When the temperature is 4°F higher than the default temperature, the heating will be stopped.

When the temperature is 4°F lower than the default temperature, it will reheat with heating level.

- After 24 hours of continuous heating, the heater will automatically stop and enter standby mode.

OPEN WINDOW MODE

This feature saves energy by automatically switching modes when an open window or door causes a sudden indoor temperature change.

- Press the button until the icon flashes for 3 seconds to enter open window mode, or press the OK button to enter.
- In open window mode, the heater automatically detects the room temperature and switches to either **Anti-frost** or **Comfort** mode.
- If the heater detects a rapid drop in room temperature of around 9°F within 3 minutes, it will automatically switch to **Anti-frost mode**. (The display shows '41°F' and , and blinks in)
- If the temperature then rises by about 4°F within 3 minutes, the heater will switch back to **Comfort** mode and resume Comfort settings.
- After 24 hours of continuous heating, the heater will automatically stop and enter standby mode.

REMOTE CONTROL

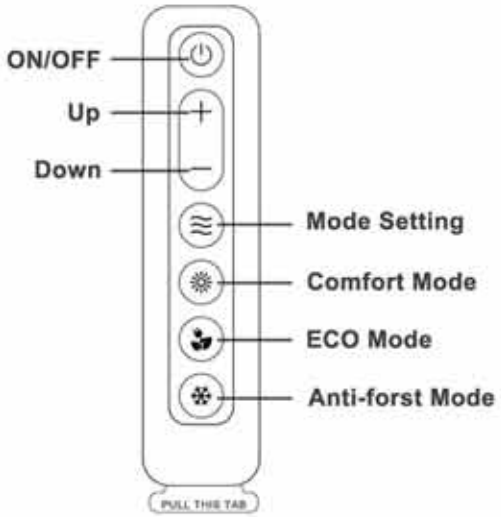

- The remote control replicates all the functions on the control panel. Refer to the above instructions for operation.
- Before use, remove the plastic tab to activate the battery contacts. Just pull to remove.
- The heater includes a remote control powered by an internal 3V CR2032 lithium button cell.

BATTERY REPLACEMENT

If the remote control battery is depleted, follow the instructions below to replace a new 3V **CR2032** button cell.

- Press the release tab next to the latch with your finger or a small tool, then gently pull out the battery compartment cover.
- Remove the old battery and insert a new one of the same type, ensuring the polarity matches the illustration.
- Push the battery compartment back into the remote control.

WARNING

- **Battery Type:** Use CR2032 batteries for the device.
- **Insert Batteries:** Insert batteries with the correct polarity.
- **Battery Storage:** Store batteries in a cool, dry place if they are not immediately used.
- **Handling Leaks:** If a battery leaks, avoid contact with the substance and clean the battery compartment carefully.
- **Short-Circuiting:** Do not short-circuit the battery terminals.
- **Keep Away from Children:** Keep batteries out of reach of children.
- **Avoid Excessive Heat:** Do not expose batteries to excessive heat, direct sunlight, or fire.
- **Avoid Moisture:** Avoid getting batteries wet or exposing them to moisture.
- **Battery Disposal:** Remove used batteries and dispose of them safely according to local regulations. Do not disassemble, crush, or puncture batteries.
- **Troubleshooting:** If the remote control does not function properly, replace the batteries first before seeking other troubleshooting steps.

WIFI CONTRAL

APP DOWNLOAD

- Search for Smart Life in the Apple Store or other app stores or scan the QR code to download the Smart Life App.

REGISTER AN ACCOUNT

- Follow the prompts to register an account using your mobile number or email address.

WIFI CONNECTION

- In standby or power on state, hold down the button and for 3 seconds to enter the distribution network, the icon flashes, and the icon lights up after the distribution network is successful.
- If the distribution network is unsuccessful, the icon will go off after 3 minutes.
- In the Wifi connection state, hold down the button and for 3 seconds, the WIFI mode will be turned off.

Note: When the connection is completed, the icon is on, and it's always on under the standby mode.

AUTOMATIC DEVICE FINDING (Connecting Device Method 1)

- Open the Smart Life APP, tap '**Add Device**' or the plus icon (+) in the top right corner of the Home page to go to the device adding page. On the '**Add Device**' tab that appears, devices can be automatically found. The app must be granted 2.4 GHz Wi-Fi and Bluetooth permissions.

WIFI CONTRAL

- This method enables simultaneously searching for multiple devices, including Wi-Fi devices, Bluetooth gateways, Bluetooth mesh devices. All devices found can be added with one tap.

MANUAL DEVICE ADDITION (Connecting Device Method 2)

- Enter the distribution network as described above, the icon lighting up indicates that the network is successfully accessed. Then open the Smart Life APP, tap '**Add Device**' or the plus icon (**+**) in the top right corner of the home page to go to the device adding page.
- Follow the step:
  Add Device > Small Home Appliances > Heater (Wi-Fi) > Enter Wi-Fi Passwrod > Press the button for 5s until the indicator blinks and the buzzer 'drops' for 1.5s > Tap the 'Confirm the indicator is blinking' > Select the status of the indicator light > Connecting Device (Successful connection, icon is always on, also in standby mode)

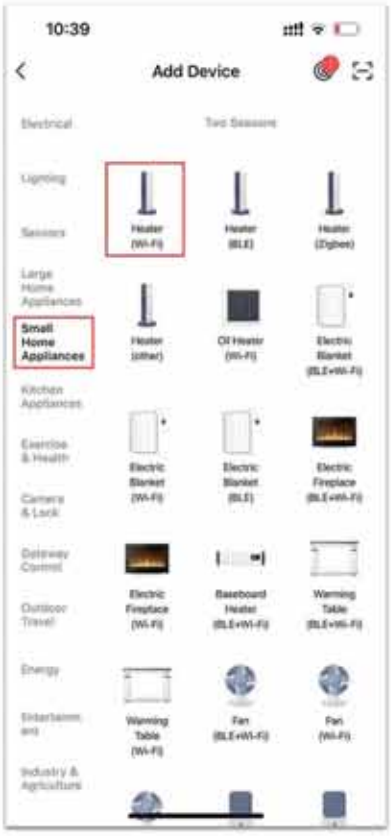

WIFI CONTRAL

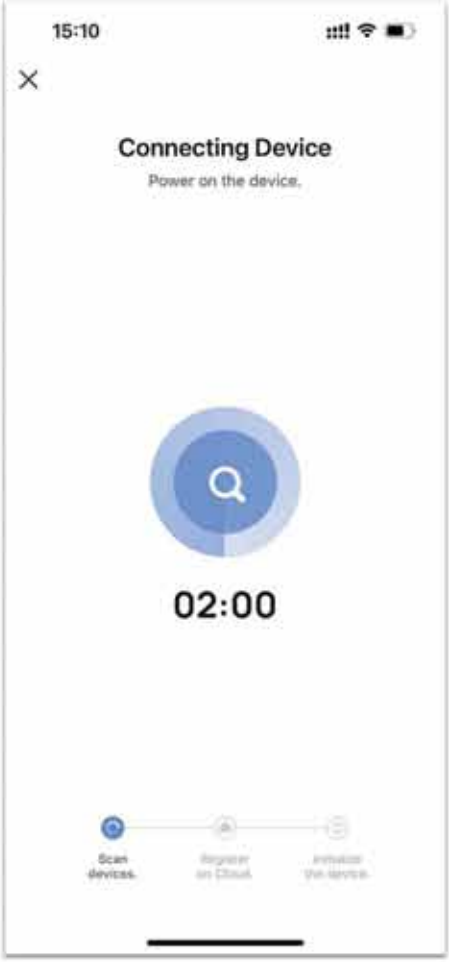

NOTE:

- If the connection is not successful, please follow this method to reset the WIFI of the device.
  When the device is in standby or startup state, hold down the mode button for 5 seconds and the buzzer prompts 1.5 seconds, indicating that the reset is successful.
- After connecting the wifi, if the power is off and turn it on again, the device will automatically reconnect to the previous WiFi network without needing to manually reconnect to WiFi.
- If WiFi is cleared or turned on but no device connects within 3 minutes, it will automatically turn off and need to be manually turned back on to connect.
- In the Wi-Fi mode, when the heater works for 24 hours continuously, it will be forced to turn off, and it needs to be restarted manually.

CLEAR THE WI-FI LOGIN ACCOUNT

- In the standby or power on state, long press the mode button for 5s, the buzzer prompts for 1.5 seconds, and the Wi-Fi connection login account is cleared.

WIFI CONTRAL

FUNCTION USAGE

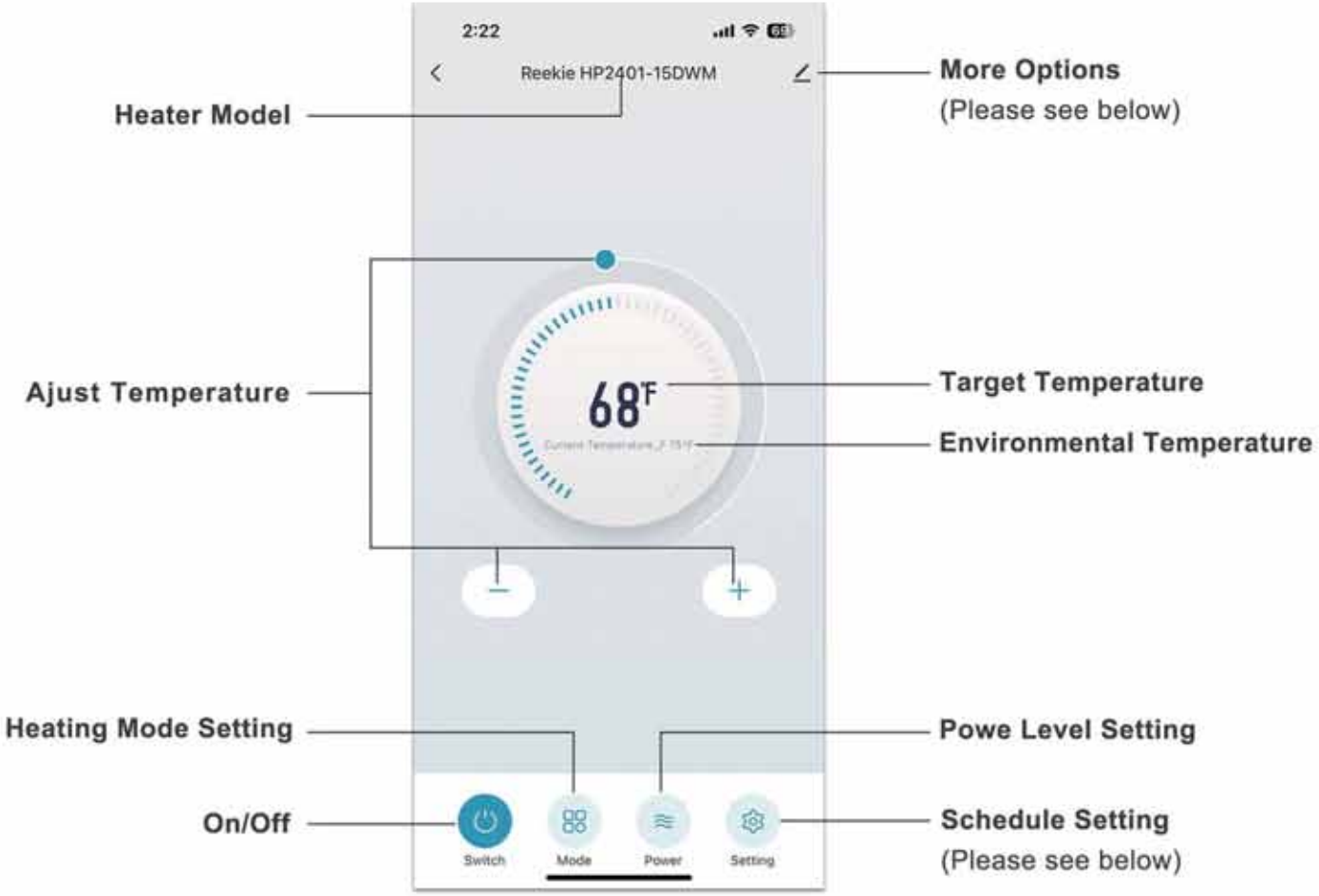

Schedule Setting:

- Select "Setting" button and select the timer to set your own schedule. You can choose your desired time to turn on / off the unit, the desired days, temperature, power.

WIFI CONTRAL

More Options:

- You can change your product's name, check device info or share your device with other people. Choose device sharing, add sharing, and share with the Account or other options.

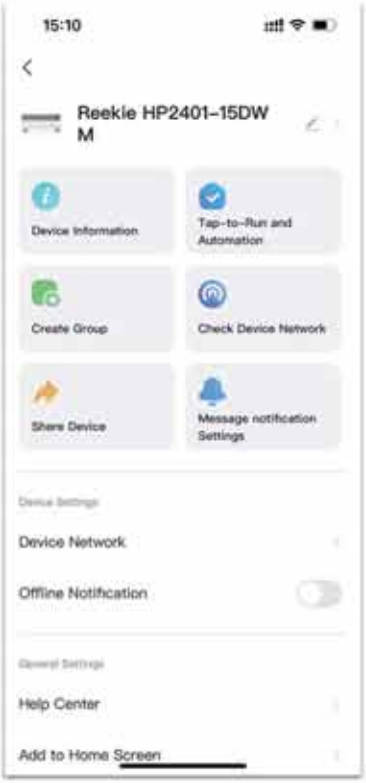

SAFETY FEATURE

OVERHEAT PROTECTION

- This heater is equipped with an overheat protection system. The heater will shut down automatically if it overheats.
- Overheat can be caused by obstruction to the air intakes on the top or either sides of the heater.
- If this occurs, please unplug the heater from the power socket and allow it to cool for 15 minutes. Remove any obstructions around the heater.
- Should the problem persist, contact our customer service team at Reekier@outlook.com.

TIP-OVER PROTECTION

- The heater is equipped with a safety cut-out switch that automatically shuts it off if it tilts more than 30°.
- If the heater gets knocked over and the safety switch turns it off, unplug the heater first. When standing it upright again, be extra careful because it remains hot.
- Before operation, inspect the heater for any damage. If you find any, do not operate the heater.

ANTI-FORST PROTECTION

- Enter anti-forst mode via the operating panel or remote control, The heater will start to work if the room temperature is lower than 41°F, and automatically shut down when the temperature is over 41° F.
- This feature is to prevent freezing with minimal energy consumption.

CLEANING AND STORAGE

IMPORTANT:

Turn off the heater. Switch off the power switch and disconnect the heater from the power socket. Wait for the heater to be completely cool before cleaning.

- Vacuum clean air vents and grilles every 2 months to remove dust. This will help maintain optimal heater performance.
- To remove dust on external surfaces, wipe the heater with a damp lint- free cloth rinsed in hot soapy water only.
- Never use abrasive or flammable solvents to clean the heater. DO NOT spray with liquids or submerge in liquids or water.
- DO NOT attempt to open the heater casing at any time.
- DO NOT clean the interior of the heater.

STORAGE

Unplug the heater when not in use and wrap the cable around the cord reel. Store it in a cool, dry, dust-free area, preferably in itsoriginal carton, to protect it for future use.

TROUBLE - SHOOTING

WARNING **Disconnect power before servicing.**

- Make sure the electrical outlet and circuit breaker are working.
- Check for obstructions. If you find an obstruction, turn **OFF** and **UNPLUG** the heater. Remove the obstruction and follow the reset instructions.
- Check the settings.

WARRANTY INFO

REEKIE 1-YEAR LIMITED WARRANTY

WHAT IS COVERED?

REEKIE 's warranty covers manufacturing and material defects for a period of 1-year from date of purchase, subject to the following conditions and limitations:

- This heater must be installed and operated at all times in accordance with the instructions furnished with the product. Any alteration, willful abuse, accident, or misuse of the product shall nullify this warranty.
- This warranty is non-transferrable, and is made to the original owner, provided that the purchase was made through an authorized supplier of the manufacturer. This warranty is limited to the repair or replacement of part(s) found to be defective in material or workmanship, provided that such part(s) have been subjected to normal conditions of use and service, and after said defect is confirmed by the manufacturer's inspection.
- The manufacturer may, at its discretion, fully discharge all obligations with respect to this warranty by refunding the wholesale price of the defective part(s).

WHAT IS NOT COVERED?

- Damage caused by the owner when attempting to fix or alter the product.
- Damage caused by misuse, abuse, neglect, alterations, or unauthorized repair.
- Natural depreciation.

HOW TO REQUEST WARRANTY SERVICES?

For warranty services, leave a message online , or send an email to **Reekier@outlook.com**. Our customer service will address your issue within 24 hours.

WHAT WILL REEKIE DO?

- Repair the item.
- Replace the item if not repairable.
- Refund the item under certain circumstances.

ALL EXPRESSED AND IMPLIED WARRANTIES, INCLUDING THE WARRANTY OF MERCHANTABILITY, ARE LIMITED TO THE PERIOD OF THE LIMITED WARRANTY.

Reekie

DISPOSAL

This product must not be disposed of via normal household waste after its service life but must be taken to a collection station for the recycling of electrical and electronic devices. The symbol on the product, the operating instructions or the packaging indicate such disposal procedures. The materials are recyclable in accordance with their respective symbols. By means of re-use, material recycling or any other form of recycling old appliances you are making an important contribution to the protection of our environment.

Please ask your local council where your nearest disposal station is located.

CAUTION

This product can expose you to toxic chemicals including Di (2-ethylhexyl) phthalate (DEHP), which may cause cancer or harm developmental growth.
Wash hands after installation.
For more information go to www.p65Warnings.ca.gov

PAP 22

IMPORTANT SAFETY INSTRUCTIONS

Warning: Changes or modifications to this unit not expressly approved by the party responsible for compliance could void the user's authority to operate the equipment.

This device complies with Part 15 of the FCC Rules. Operation is subject to the following two conditions:
(1) this device may not cause harmful interference, and (2) this device must accept any interference received, including interference that may cause undesired operation.

Note: This equipment has been tested and found to comply with the limits for a Class B digital device, pursuant to part 15 of the FCC Rules. These limits are designed to provide reasonable protection against harmful interference in a residential installation. This equipment generates, uses and can radiate radio frequency energy and, if not installed and used in accordance with the instructions, may cause harmful interference to radio communications. However, there is no guarantee that interference will not occur in a particular installation. If this equipment does cause harmful interference to radio or television reception, which can be determined by turning the equipment off and on, the user is encouraged to try to correct the interference by one or more of the following measures:
-- Reorient or relocate the receiving antenna.
-- Increase the separation between the equipment and receiver.
-- Connect the equipment into an outlet on a circuit different from that to which the receiver is connected.
-- Consult the dealer or an experienced radio/TV technician for help.
To maintain compliance with FCC's RF exposure guidelines, the distance must be at least 20cm between the radiator and your body, and fully supported by the operating and installation configurations of the transmitter and its antenna(s).

Reekie

Customer service:Reekier@outlook.com
Manufacturer:Dongguan Shangqi Electronic Technology Co., Ltd
Address:Room 302, 1st Building, No. 5 Lane 1, Xiyu Road, Hengli Town,
Dongguan City, Guangdong Province, China

Reekie