TINGON Smart Rotating and Telescoping Masturbators M1

User Manual

Scan the QR code for more information

Tingon | *Enjoy More*

X

Focus On Dopamine Pleasure

TINGON dopamine toys are the ultimate in quality. With beautifully crafted designs guided by expert insight and extensive research, our collection has been created to empower people to explore a new world of intimate -and infinite – possibilities.

Safety Tips

- This product is for personal use only and is not intended for use by other institutions or in public places
- This product is designed for private, personal use only and should not be used for any other purposes.
- The product contains a built-in capacitor that is non-removable; do not attempt to replace it.
- Do not modify, disassemble, or repair this product yourself.
- Avoid dropping or striking the product. Do not use the product if it is damaged
- Do not block the heater vents to prevent short circuits or fire hazards.
- Use a sufficient amount of lubricant when using the product to avoid discomfort.
- The product must not be exposed to moisture or water. Warning: Do not use this device near water-filled bathtubs, showers, washbasins, or other containers.
- Disconnect the power supply after use. When unplugging the power cord, hold the hard part of the plug. Do not pull on the power cord or use it to drag the product.
- Always use original TINGON accessories compatible with this model.
- Do not place the product or its capacitor near high temperatures or heating devices such as sunlight, microwaves, heaters, or ovens. Overheating the capacitor may cause an explosion.
- Use this product within an ambient temperature range of 5°C to 35°C and store the product and its accessories within a temperature range of 5°C to 45°C.
- If you have diabetes or other medical conditions, consult a doctor before use.
- Store the product in a clean, dry place, away from direct sunlight, and out of reach of children.

Package Contents

1. Main Unit of Masturbator
2. 1 USB-C Charging Cables
3. 5 Custom Stickers

RoHS CE UK CA FC

Product Details

Model	TINGON M1
Materials	PC+ABS+TPE
Dimensions	336.3*226.6*99.1mm
Net weight	1082.9g
Telescopic Mode	3 speed settings
Rotational Mode	3 speed settings
Telescopic + Rotational Mode	3 speed settings
Right-side Throttle Handle	One-touch burst mode
TINGON APP	Available for download from the TINGON official website
Working Time	- minutes
Charging Time	- minutes
Waterproof rating	IPX6
Operating Noise	< ** decibels

TINGON APP

(Scan the QR code to visit the TINGON official website. Download the app based on your Android or Apple device. After successful registration, you can connect to all products in the series and enjoy more diverse features and synchronized interactive functions.)

Instructions for Use

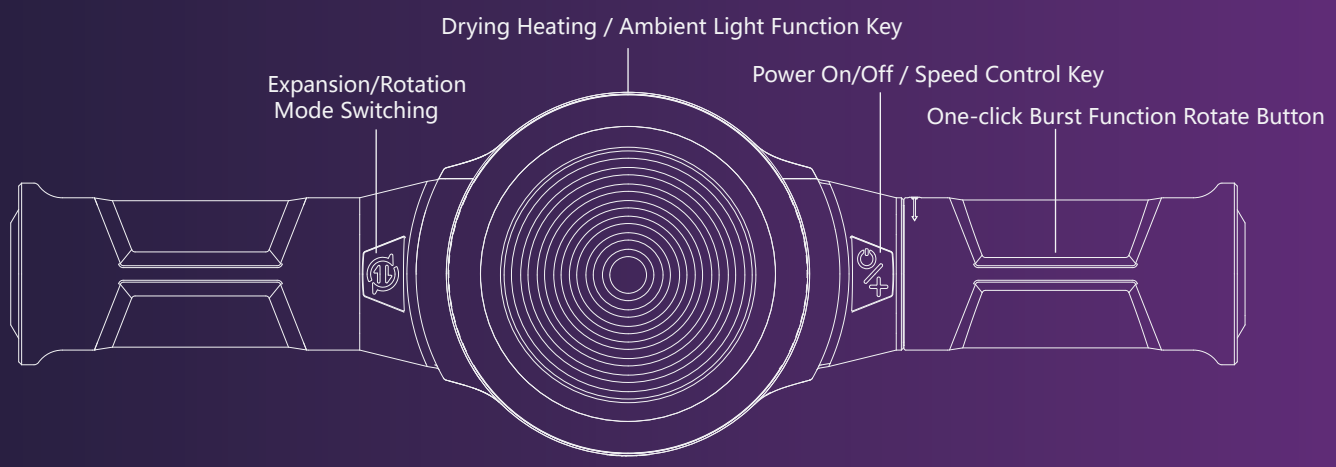

Power On/Off: Long press the " " button for 1.5 seconds to turn the device on or off. When powered on, the button indicator light and the RGB lights on both sides of the handle will light up.

Speed Control: After powering on, use single clicks of the " " button for incremental acceleration and deceleration through three speed levels in a loop.

Telescopic/Rotational Mode Switching: Single-click the telescopic/rotational " " switch button to toggle between telescopic and rotational functions.

Right-Side Throttle Knob Control: Turn the right-side throttle knob fully to activate the one-touch burst function. The burst function operates at full power in the current telescopic/rotational mode. It automatically disengages when released or after 10 seconds. To reactivate, turn the knob again.

Heating and Drying Module: When using the heating module, insert the USB-C power cable to power it up. Upon powering, the light ring illuminates indicating the heating is active. At room temperature, using a 3A output power plug, it reaches 38°C within 3 minutes. The heating and drying automatically cease after 60 minutes. During operation, short press the " " temperature sensing heat switch button to control the light ring, and long press the " " temperature sensing heat switch button to control the activation and deactivation of the heating function.

Product Description

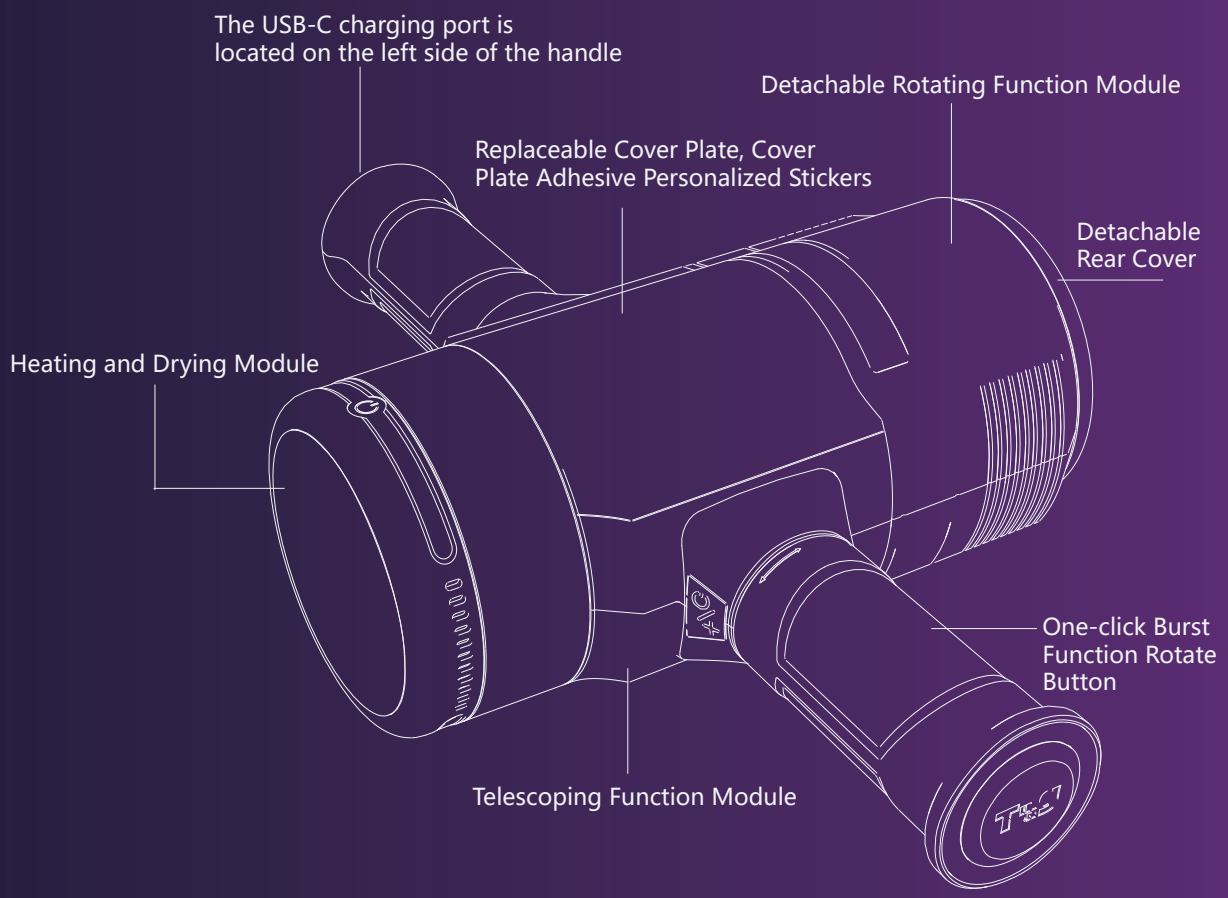

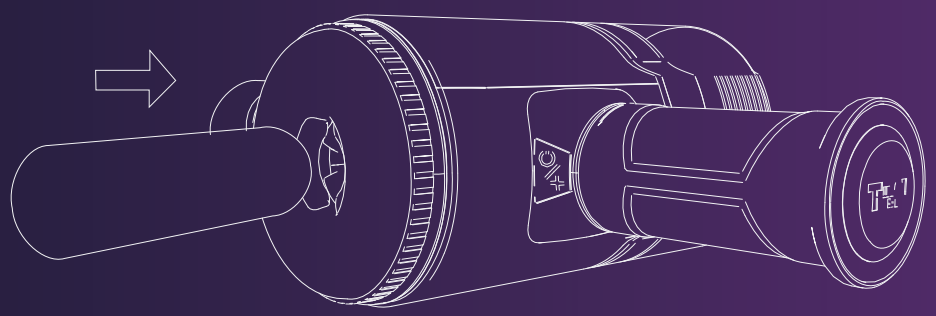

This product allows the back cover to be opened,
providing a different sensation when used front and back

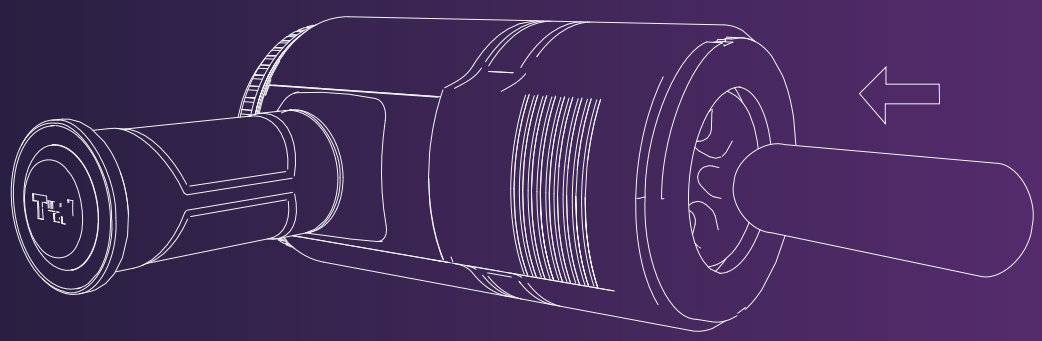

Precautions

First-time Use and Charging

- Before using the product for the first time, please ensure to charge it. Insert the provided USB-C charging cable into the charging port located on the left side handle of the product
- During normal charging, the indicator lights on both handles will blink intermittently. When the battery is fully charged, the indicator lights on both handles will remain steady.
- Before using the product, ensure proper cleaning. Use warm water or a specialized cleanser to wipe the areas that will come into contact with the body. Dry gently with a towel.

Applying Lubricant

- Apply a sufficient amount of water-soluble lubricant on the soft rubber parts of the device or on the body to achieve a comfortable and pleasant experience. This product is compatible only with water-soluble lubricants

Use Caution

- This product is not suitable for use on swollen or inflamed skin areas to avoid causing harm or exacerbating discomfort

Cleaning and Maintenance

- After each use, disassemble and remove the soft parts. Rinse them with warm water and antibacterial soap, then rinse thoroughly with clean water. Do not immerse the entire device in water for cleaning.
- Gently dry off excess water with a towel. It is recommended to dry most of the water and then place the parts into the cup for drying using the heating module. The drying function of the module automatically ends after 1 hour, ensuring the parts are completely dry before storage

Safety Precautions

- Do not operate the device while it is charging. Ensure the device is turned off during charging. Avoid charging near water sources.

Product Cleaning Instructions

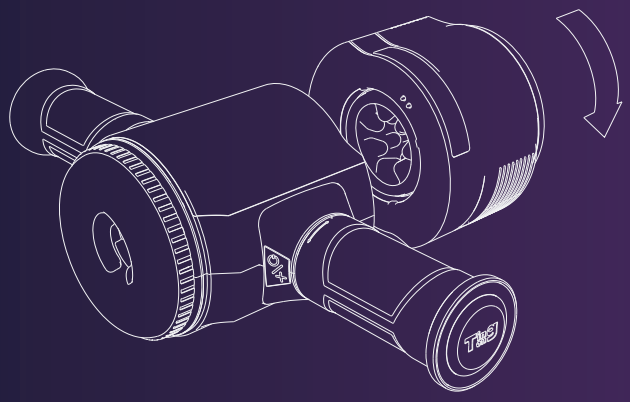

1.Splitting diagram module through rotation.

2. Remove the soft parts of the telescopic and rotating modules for cleaning, as shown in the diagram.

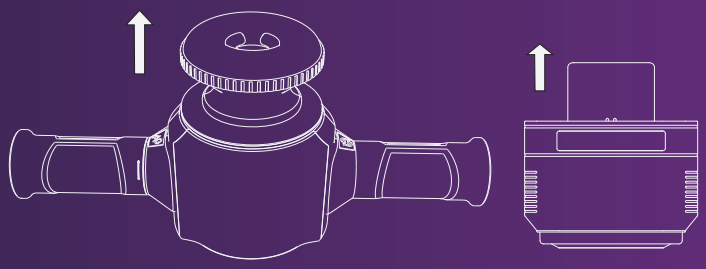

3. The soft parts can be washed with water directly and air-dried, or dried using the heating module.

Attention:

This product should not be used in humid environments and the cup body should not be directly rinsed. Daily maintenance only requires wiping with a damp cloth.

FCC Caution

- This device complies with part 15 of the FCC Rules. Operation is subject to the following two conditions: (1) This device may not cause harmful interference, and (2) this device must accept any interference received, including interference that may cause undesired operation.

- Any Changes or modifications not expressly approved by the party responsible for compliance could void the user's authority to operate the equipment.

- Note: This equipment has been tested and found to comply with the limits for a Class B digital device, pursuant to part 15 of the FCC Rules. These limits are designed to provide reasonable protection against harmful interference in a residential installation.

- This equipment generates uses and can radiate radio frequency energy and, if not installed and used in accordance with the instructions, may cause harmful interference to radio communications. However, there is no guarantee that interference will not occur in a particular installation. If this equipment does cause harmful interference to radio or television reception, which can be determined by turning the equipment off and on, the user is encouraged to try to correct the interference by one or more of the following measures:

- -Reorient or relocate the receiving antenna.

- -Increase the separation between the equipment and receiver.

- -Connect the equipment into an outlet on a circuit different from that to which the receiver is connected.

- -Consult the dealer or an experienced radio/TV technician for help.

- The device has been evaluated to meet general RF exposure requirement. The device can be used in portable exposure condition without restriction.