II. Product instructions for quick usage

1. RF wireless signal detection

1.1) In case we start the machine to light up the largest display screen by turning the knob clockwise, the "beep" sound will start for a long time. Then the machine will enter into the detection mode and the signal strength will be indicated at level 10.

1.2)RF signal indicator is on at this time. We can turn the knob to light up level 1 signal strength indicator according to the current signal environment and enter the standby state (Under the signal environment, the signal indicator is in multi-level flashing state). Vibration or sound indication mode can be switched by short press MODE key. In order to achieve the optimal detection effect, the sensitivity can be enhanced or weakened by adjusting the knob in operation.

1.3)In case the strength indicator shows full in the environment with strong signal, you can adjust properly the knob to reduce the sensitivity with no more than level 4 for the best detection state. In case the signal strength light reaches level 7, the vibration or sound indication will be activated. As for locating the suspicious object, the higher the signal indication level, the closer the suspicious object. In case the strength indicator is full, the sensitivity can be reduced by adjusting the knob. Continue to approach the strong signal until the location of the suspicious object is locked It is needed to continue to approach the strong signal direction until the location of the suspicious object is locked.

1.4)Due to the high sensitivity of the product, you can receive the signals from mobile phone base station, TV broadcast, etc. all over the city roads. Before searching the car internal tracker, it is necessary to drive the car to the place with weak signal and turn off the portable mobile phone and other equipment with wireless transmission signal source.

1.5) In case the alarm action occurs from time to time in the room where there are indeed no suspicious objects. There are the following several possibilities. 1. The self-contained communication equipment matches automatically the code with the base station on a timed basis. 2. The suspicious object is in the next door or someone is on the phone in the next door. 3. You are close to the wireless router or other signal sources.

2. Magnetic field signal detection

2.1)The K19 Upgrade uses a highly sensitive magnetic sensor chip, which can sense the strength of the magnetic field and accurately locate the suspicious device. In the power-on signal state, when you press and hold the GS button (press to return to the signal detection function), the LCD magnetic field function indicator will light up, the floodlight at the probe will also light up, and the beep sounds for a long time, which indicates that the machine enters the detection mode, and the signal level will be indicated as Level 10. At this time, turn the knob until all the signal level indicators light off, which indicates that the machine enters the standby state (the signal level can be adjusted to the first or second level to light up, which can increase the detection distance).

2.2)During operation, it can be reset to the standby state in real time by adjusting the knob to achieve the best detection effect. When the probe is close to the magnetic field source at the effective detection distance, the signal level indicator starts to light up. When the third level is reached, the vibration or sound prompt will be activated. When all the signal level indicators light up, it means there is a suspicious object with a magnetic field near the probe. The probe can be moved left and right or up and down according to the strength of the magnetic field signal to accurately determine the location of the suspicious object according to the signal level. You can press the MODE button to switch between vibration mode and voice announce mode.

2.3)The effective distance of this function is within 20CM. This function is more commonly used in automobile inspection. For the car bottom, the front cover, the trunk and the inside of the car or other positions to be inspected, it is recommended to scan and search by grid areas.

3.Flashlight auxiliary lighting function

3.1)two auxiliary lighting functions are added to K19: flashlight and small night light

3.2)in the power-on signal state, have a long-press on the TORCH buttonfor the flashlight function. At this time, the two highlighted white LEDs on the back will light up.Have a short-press to turn off the flashlight.

3.3) in the power-on signal state, have a long-press on the GS button formagnetic field detection function.At this time, the probe lamp lights up. It can be bent into any desired shape for your needs and can be used as a small night light or as a special flashlight with a small head.For example, you can use it to check the corners or gaps

4.Product features for the detection function of K19 infrared night vision camera

4.1)all kinds of pinhole cameras with infrared night vision capabilities, infrared night vision devices, and wired or wireless shooting devicecan be effectively detected due to the detection function of K19 infrared night vision camera.Vibrating or audible alarm occurs as long as you are secretly photographed in low light or no light environment, which can effectively protect your privacy from infringement.

4.2)professional infrared detection technology is used by K19 detector with a built-in high-precision infrared sensor receiving device and s signal processor.Environmental scanning and precise target positioning through software intelligent analysis are realized, and vibrating or audible alarm mode is provided byK19 detector, with the characteristics of active alarm, real-time monitoring, and convenient operation etc.

4.3)Detect hidden camera device with infrared laser scanning function

In the power-on signal state, have a short-press to turn on or turn off the function.The infrared flash icon on the LCD lights up to a fixed state.When the LED on the back is on, you can have a long-press to change the flashing frequency of the LED and stop-press to select frequency.You can choose the appropriate flashing frequency as required. A highlighted infrared LED laser and a special glass filter can be used to scan whether there is a camera device in the surrounding environment in the function.You can use the physical characteristics of the optical lens of the camera device to be reflective of glass to determine the location of the camera device.During the scanning process, if you find a red reflective spot somewhere, you can choose a suitable flashing frequency to gradually determine the hidden location of the suspicious object. Within 0.1-5 meters is the effective distance of the function.

4.4)Detect night vision camera device with infrared automatic detection function

A.In the power-on signal state, have a long-press on the IR button(short-press to return to the signal detection function).When the infrared flash icon on the LCD lights up to a blinking state, the infrared detection function is entered.Within 0.1-3 meters is the effective distance of the function.

B.Automatic infrared detection function:suspicious infrared light sources in the environment can be detected by the high-precision infrared sensor in real time.Instant alarm occurs as long as you are secretly photographed in low light or no light environment.You don't need to hold your device to look around anymore. Just keep it by your side all night for protection it in real timewithout anxiety.When the infrared illumination radiation emitted by the night vision camera device is detected by the detector, the LCD will display the strength of the infrared signal, and the alarm will emit vibration or sound.You can have a short-press on the MODE button to switch between vibration and sound prompt mode.The greater the strength of the infrared signal, the closer to the night vision device.When angle reception problems appear in the automatic detection function, you can use manual blind-scan to accurately detect at this time.

C.Manual infrared blind-scan detection function:The infrared receiving sensor on the back of the handheld device is aimed at the suspicious location or orientation.Blind scanning and detection of suspicious locations can be realized byregional scanning within the effective distance.When the infrared illumination radiation emitted by the night vision camera device is detected by the detector, the LCD will display the strength of the infrared signal, and the alarm will emit vibration or sound.You can have a short-press on the MODE button to switch between vibration and sound prompt mode.You can accurately locate the suspicious device according to the strength of the infrared signal.

Note:The IR function can also detect infrared light sources in the presence of natural light (sunlight spectrum). Please distinguish!

III. Main technical indexes and parameters

1	Frequency domain	100M Hz - 8G Hz
2	Detection dynamic range	＞73DB
3	Detector sensitivity	≤0.03mv
4	Detection range	2.4G：10 square meters (standard 10mw) 11.2G：10 square meters (standard 10mw) Mobile phone spectrum 2G、3G、4G Signal 15 square meters Mobile phone spectrum 2G、3G、4G Signal 15 square meters
5	Functional audiovisual quantization	Level 10 LCD strength display; various functions of LCD panel visual, simple and easy to operate
6	Power supply	Built-in 3.7V1000mA polymer lithium battery, and full charge in 5 hours. Please use the DC-5V charger for charging
7	Detecting operating current	60-110mA
8	Magnetic field detection	Highly sensitive magnetic sensing probe; the detection range is within 10CM
9	Shot detection	1. Infrared laser scanning; the detection range is 0.1-5 meters 2. Automatic or active infrared detection; detecting optical domain 760nm-980nm (near-infrared); the detection range is 0.1-3m
10	Auxiliary lighting function	1. TORCH torch function 2. Night light function in GS mode
11	Alarm method	Sound / vibration / intensity visible
12	Volume	124×56×20mm
13	Material	Plastic (PC+ABS) + metal
14	Weight	Machine 160g
15	Continuous operating hours	Work continuously for more than 5 hours, specific see open function

IV. Main feature

1. Professional advanced detector incorporate professional radio wave detection, magnetic detection, detection of hidden wired or wireless camera equipment, and multi-function detection of auxiliary lighting torch.
2. High sensitivity, wide adjustable range and wide detection frequency.
3. Simple operation, easy to carry, alarm function of sound, light, vibration.
4. It can detect Mobile, Unicom, Telecom mobile phones in 2G.3G.4G band SIM card bug, and GPS locator.
5. It can detect 1.2G to 5.8G wireless camera equipment.
6. It can detect magnetic locator and detectaphone in standby mode.
7. LED laser technology can detect wireless or wired camera in standby mode.
8. Efficient infrared sensor can detect suspicious infrared light source in the environment in real time, and find out suspicious camera equipment. It can realize blind check out.

V. Target users

1. People who often use bank cards.
2. People who often stay in hotels on business trips.
3. Beautiful women who are easy to be photographed.
4. People who often go to public entertainment occupancies.
5. People who often go to shopping malls for fitting.
6. People who respect their own privacy and others' privacy.
7. People who have access to and keep commercial secrets.
8. Security personnel in places where business secrets and technical secrets are kept.
9. Professionals who are capable of counter sneak shot and eavesdropping.

VI. Scope of application

1. Detect whether the car or office is equipped with a wireless bug or tracking locator;
2. Detect whether your mobile phone has been tapped or abnormal (transmitting signals outside for no reason in standby state);
3. Detect whether there is base station radiation in your working place and residential building roof;
4. Mobile phone SMS sending and receiving, Internet surfing, call monitoring
5. Wireless network, mobile phone base station, wireless monitoring system monitoring
6. Detect electromagnetic radiation leakage from household appliances, such as microwave ovens, etc.
7. Detect whether there is suspicious wireless signal in the environment;
88. Check hotel toilets, hotels, entertainment places, locker rooms, politician authority, etc.
9. Business negotiations, school proctoring, workshops, military facilities
10. Radio waves coincident with movements on the mahjong table
11. Mortgage cars, second-hand cars, pawnshops, guarantee companies, small loan companies, information finance companies, etc.

VII. Common questions and answers

1.) Why does the detector vibrate as soon as it is turned on, and the strength indicator keeps flashing?
Answer: Signals are everywhere, and there are too many sources of interference signals. It is recommended to turn off your own known signal sources, such as mobile phones, WIFI routers, etc. during detection, and then decrease the sensitivity appropriately.

2.) Why is the quiet sleep tracker not detected?
Answer: The commonly used sleep locator works once a day and only works for less than 5-10 minutes at a time. Therefore, when the detector is detecting wireless signals, the locator may be in a standby state and does not send a signal.

3.) Why is the position of the real-time locator not accurately detected?
Answer: The real-time locator generally sends a signal every 10 seconds. Do not move back and forth during detection. It is best to fix it in one position for more than 5 minutes, and then move to another position.

4.) Why is the camera not detected by signal detection?
Answer: It is possible that the wireless camera device is not working, or it is possible that the camera is a wired camera device. In such a case, use infrared laser detection instead.

5.)Why does the hand touch or press the LCD screen, the pressed position will spear a spread of shadows?
Answer: Because when the LCD is close to the surface and it touches or presses, the stress will squeeze the liquid crystal flow and may cause black shadows. It will return to normal immediately after release, please be assured use.

6.)Some users asked: Some products on the Internet are divided into white, green, yellow and red four areas in the intensity of display that correspond to signal security, suspicious area, danger area and locked danger area. Is such a device particularly smart?
Answer:That's not true. First of all, this statement is just a business misleading non-professional users of the concept of the statement. This is just a signal strength indicator. The indicating strength will remain at the full grid, namely the red area, in any strong signal environment, but it is not necessarily the danger area. Secondly, it is also possible that the anti-interference performance of these devices is poor so they cannot be used normally in strong source multi-source environment.

Product packaging content:
1. Main engine 1 set 2. Antenna 1 piece
3. Magnetic field probe 1 piece 4. Power line 1 cord
5. Specification 1 copy
Please check the above five items when unpacking. The product color and specific parameters shall be subject to the actual product.

IMPORTANT: The product must be charged with a DC/5V charger.

FCC Warning
15.19 Labeling requirements.
This device complies with part 15 of the FCC Rules. Operation is subject to the following two conditions: (1) This device may not cause harmful interference, and (2) this device must accept any interference received, including interference that may cause undesired operation.
15.21 Information to user.
Any Changes or modifications not expressly approved by the party responsible for compliance could void the user's authority to operate the equipment.
15.105 Information to the user.
Note: This equipment has been tested and found to comply with the limits for a Class B digital device, pursuant to part 15 of the FCC Rules. These limits are designed to provide reasonable protection against harmful interference in a residential installation. This equipment generates uses and can radiate radio frequency energy and, if not installed and used in accordance with the instructions, may cause harmful interference to radio communications. However, there is no guarantee that interference will not occur in a particular installation. If this equipment does cause harmful interference to radio or television reception, which can be determined by turning the equipment off and on, the user is encouraged to try to correct the interference by one or more of the following measures:
-Reorient or relocate the receiving antenna.
-Increase the separation between the equipment and receiver.
-Connect the equipment into an outlet on a circuit different from that to which the receiver is connected.
-Consult the dealer or an experienced radio/TV technician for help.

K19+

GPS SIGNAL DETECTOR

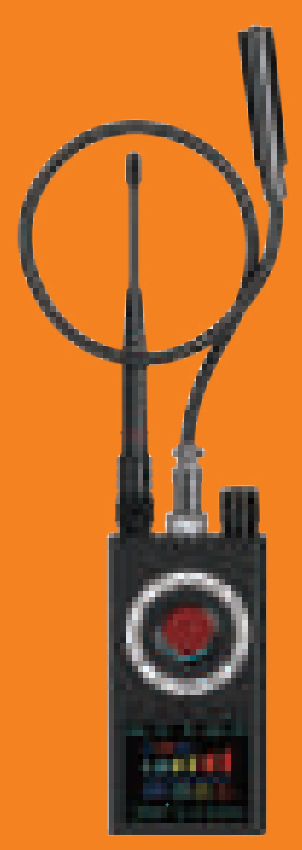

GB4943 CE FC Made in China

Foreword

K19 is the upgraded version of K18. K19 realizes the visible function surface, which make the operation easier and more convenient. The upgraded product is provided with a more sensitive magnetic sensor chip, which can identify the strength of the magnetic field to accurately locate the location of the suspicious object. The upgraded product is added with some practical functions, such as blind scanning detection and automatic detection of night vision infrared lens.

K19 detector is provided with the advanced technology from Germany. It is a security prevention instrument that is accurately developed at various bugs, car trackers, mobile phone undercover software, wireless pinhole camer-as, surveillance cameras, equipment for gambling fraud and other products in the market. The product fully realizes the functions of military/police reconnaissance in this field. In the meantime, the magnitude detection of electrical radiation sources can avoid the damages to you and your family from electromagnetic radiation. This product takes the lead in adopting a digital receiving mode, which is different from all products in the market. For one thing, it broadens the detection frequency domain; for another, it effectively avoids that the ubiquitous messy signals interfere with the product in life and greatly improves the sensitivity. In addition, the sensi-tivity is provided with super dynamic adjustment. The product can be easily located by adjusting the knob regardless of the strength of the signal source. K19 is currently the most advanced portable wireless signal and magnetic field detection equipment. The special point is that it makes special processing for CDMA signal. CDMA signal cannot be detected by conventional radio wave detectors. You can test the sensitivity of the detector by making a call with a telecom phone card. CDMA Mobile Phone Protocol is a wireless frequency hopping technology, which is invented by the US military. Its full name is (Code Division Multiple Access). Its transmitting power is very small and it cannot be detected by some conventional radio detectorseasily. In general, CDMA card or WCDMA card is used in the tracking locators in the market. Consequently, K19 is your best choice.

I. Product structure

1	RF antenna	9	For LASER detection function indicator, please press LASER key to start
2	Magnetic sensor probe		For infrared light detection function indicator, please press IR key to open for a long time
3	The sensitivity adjustment for switch and signal	10	Infrared window
4	Magnetic field detection indicator	11	Signal strength indicator
5	RF signal detection indicator	12	8 high bright red LED laser lights
6	Battery indicator	13	2 high bright white LED laser lights
7	Sound alarm indicator	14	Infrared induction receiver
8	Vibration alarm indicator	15	DC/5V charging port
★	The adjustable potentiometer switch can enhance the sensitivity clockwise and decrease the sensitivity anticlockwise until it shuts down		
★	Function keys are as follows: MODE mode key, GS Magnetic detection key, IR infrared detection key, TORCH torch key and LASER laser scanning key		

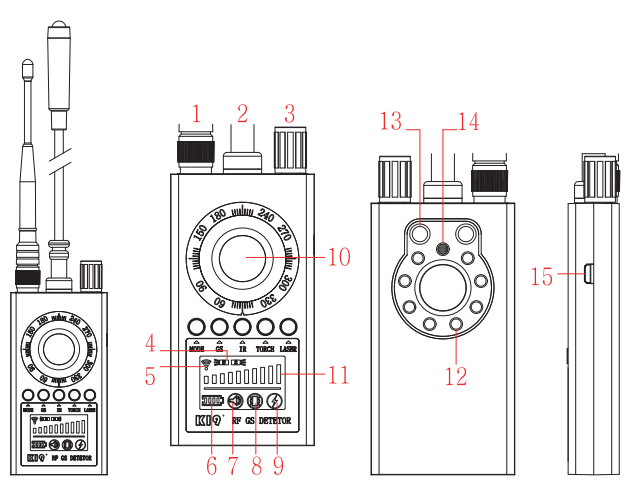

FCC RF Radiation Exposure Statement:
1.This Transmitter must not be co-located or operating in conjunction with any other antenna or transmitter.
2.This equipment complies with RF radiation exposure limits set forth for an uncontrolled environment.
This equipment should be installed and operated with minimum distance 20cm between the radiator and your body.