比亚迪股份有限公司
BYD COMPANY LIMITED

客户：江苏苏豪国际

Customer: SOHO International Group Corporation

G1200产品规格书

Product Specification of G1200

产品名称 **Product Name：1200W Portable Power Station**

产品型号 **Product Model：G1200**

客户料号 **Customer P/N：**

日　　期 **Date：2024-09-13**

BYD	编制 Prepared by		确认 Confirm
	电芯 Cell	江俊鑫	丁帆帆
	电控 EE	尉雯 孙浩苒	钟灵
	结构 ME	梅帆 钟胜	张林
	批准 Approved by		
	产品 PM	钟灵	
	项目 PM	蔺伟	
客户 Customer	确认 Confirm		批准 Approved by

地址：中国广东省深圳市大鹏新区葵涌延安路 1 号 邮编：518119

Add: No.1,Yan'an Road Kuichong Dapeng New District Shenzhen, 518119, P.R.China
电话 **TEL:+86-755-89888888** **FAX: +86-755-84232333**
http://www.byd.com.cn

——机密，请保持完整——
-Confidential. Please keep integrated.-
本规格书的内容版权归比亚迪所有，需严格保密，未经书面同意，禁止全部或部分外泄、复制或使用。

The content of this document is the property of BYD Company Limited.
It is to be treated strictly confidential and is not to be disclosed, reproduced, or used in whole or in part without written consent.

修改记录Revision History

版本 Edition	描述 Content changed	日期 Edit date
A-0	初稿 First publish	2024-09-13

——机密，请保持完整——
-Confidential. Please keep integrated.-
本规格书的内容版权归比亚迪所有，需严格保密，未经书面同意，禁止全部或部分外泄、复制或使用。

The content of this document is the property of BYD Company Limited.
It is to be treated strictly confidential and is not to be disclosed, reproduced, or used in whole or in part without written consent.

目录 Table of Contents

1.适用范围 Scope....4
2.产品描述 Description....4
3.产品规格 Product Specification....4
4.屏幕显示 Display Screen....10
5.故障代码 Fault Code....11
6.产品设计规范 Product Design Specification....13
7.保质期 Quality Guarantee Period....13
8.环境要求 Environmental Requirements....14
9.变更前的通知 Prior Notice of Change....14
10.产品图 Product Diagram....14

——机密，请保持完整——
-Confidential. Please keep integrated.-
本规格书的内容版权归比亚迪所有，需严格保密，未经书面同意，禁止全部或部分外泄、复制或使用。

The content of this document is the property of BYD Company Limited.
It is to be treated strictly confidential and is not to be disclosed, reproduced, or used in whole or in part without written consent.

1.适用范围 Scope

本产品规格书适用于由比亚迪提供给客户的便携储能产品。

2.产品描述 Description

2.1 描述 Description：1200W 便携式户外储能电源

2.2 产品型号 Product model：G1200

2.3 总充电功率 Total charge power：1200W MAX

2.4 总放电功率 Total discharge power：1581W MAX

2.5 产品图片 Product photo：

3.产品规格 Product Specification

3.1 充电规格 Charge spec

3.1.1 DC/太阳能输入规格 DC/solar power charge spec

项目 Item	最小值 Min	标准 Rate	最大值 Max	备注 Record
DC 输入电压范围 DC charge voltage	10Vdc	/	50Vdc	
DC 输入电压保护 DC charge protection	53Vdc	55Vdc	57Vdc	
DC 输入电流范围 DC charge current	/	/	8± 0.5A	输入电压 charge voltage：10-16.5±0.5V，23.5V-33V
太阳能充电电流 solar power charge current	/	/	12± 0.5A	根据光照强度自动调整充电电流。输入电压 Adjust charge current according strength of solar：17-23.5±0.5V，33V-55V
MPPT 功率 MPPT power	400W±30W			

3.1.2 AC 输入规格 AC charge spec

——机密，请保持完整——
-Confidential. Please keep integrated.-
本规格书的内容版权归比亚迪所有，需严格保密，未经书面同意，禁止全部或部分外泄、复制或使用。

The content of this document is the property of BYD Company Limited.
It is to be treated strictly confidential and is not to be disclosed, reproduced, or used in whole or in part without written consent.

项目 Item	最小值 Min	标准 Rate	最大值 Max	备注 Record
输入电压范围 Charge voltage	110Vac	120Vac	130Vac	
输入欠压保护 Low voltage protection	87Vac	90Vac	93Vac	
输入过压保护 High voltage protection	147Vac	150Vac	153Vac	
输入功率 Charge power			1200W	
输入 AC 频率 AC charge frequency	44Hz	60Hz	66Hz	
输入功率因素 Charge power factor	0.9		1	Vin=100～120V@ac100% Load
输入 AC 波形 AC charge wave				正弦波 Sine wave

3.1.3 充电控制策略 Control strategy of charge（供参考 Just for reference）

3.1.3.1 BMS 限功率策略 Power limitation from BMS

Tcell	产品最大充电功率限制 Charge power limitation
[0°C,5°C]	≤200W
(5°C,20°C]	5°C功率限制 200W，温度每增加 1°C，功率限制升高 56W Charge power limitation is 200W at 5°C, it increase 56W per 1°C increase
(20°C,40°C]	≤1200W
(40°C,50°C]	41°C功率限制 820W，每升高 1°C，功率限制降低 67W，温度升高至 48°C后恒定为 333W。 Charge power limitation is 820W at 41°C, it decrease 67W per 1°C increase before 48°C, then it remains 333W

Tcell 为电芯表面温度

Tcell means surface temperature of cell。

SOC≤1%或电池组电压≤24V 时为涓流充电，充电功率 120W

Charge power limitation is 120W when SOC≤1% or battery voltage ≤24V。

SOC 大于等于 97%，并且电压＞28.2V，最大充电功率限制 220W

Charge power limitation is 220W when SOC≥97% and battery voltage >28.2V

3.1.3.2 逆变器限功率策略 Power limitation from INV

T_{INV}	AC 输入功率 AC charge power
[0°C,68°C]	≤1200W
(68°C,73°C)	≤860W

——机密，请保持完整——
-Confidential. Please keep integrated.-
本规格书的内容版权归比亚迪所有，需严格保密，未经书面同意，禁止全部或部分外泄、复制或使用。

The content of this document is the property of BYD Company Limited.
It is to be treated strictly confidential and is not to be disclosed, reproduced, or used in whole or in part without written consent.

[73℃,78℃)	≤780W
[78℃,83℃)	≤515W
[83℃,92℃)	≤250W，触发温度保护停止（92℃） Stop charge after trigger temperature protection。

3.2 放电规格 Discharge specification

3.2.1 DC 输出规格 DC discharge spec

输出模块 Discharge	功能特性 Function	
USB-A*2	输出功率 Discharge power	22.5W MAX *2。
	支持输出协议 Discharge protocol	APPLE2.4A、BC1.2 DCP、QC3.0、FCP、SCP、AFC。
USB-C*2	输出功率 Discharge power	100W MAX *2。
	支持输出协议 Discharge protocol	APPLE2.4A、SAMSUNG5V2A、QC3.0、QC2.0、PD3.0、PPS（3-11V3A/3-21V3A）、FCP、AFC、BC1.2。
点烟口 Car port	输出规格 Discharge spec	CC：12.9-14.3V/10A CV：12V/10-13A
DC5521*2	输出规格 Discharge spec	13.6V/5A *2。

3.2.2 AC 输出规格 AC discharge spec

项目 Item	最小值 Min	标准 Rate	最大值 Max	备注 Record
输出电压范围 Discharge voltage	110Vac	120Vac	130Vac	100-120V。
输出功率 Discharge power	100W	1200W	1260W	
恒功率模式输出 U-turbo model power	-	-	1260W	恒功率模式下 AC 输出功率 AC discharge power in U-turbo mode
自适应输出 AC 频率 AC discharge frequency self-adaptation	59Hz	60Hz	61Hz	输出频率 Frequency＞55Hz
	49Hz	50Hz	51Hz	输出频率 Frequency≤55Hz
输出功率因数 Discharge power factor	0.95		1	
输出 AC 波形 AC discharge wave	正弦波 Sine wave			
转换效率 Conversion efficiency	90%	/	/	
恒功率输出欠压 Low voltage protection in U-turbo mode	65V	70V	75V	输出电流不超过15A When discharge current lower than 15A

3.2.3 放电控制策略 Control strategy of discharge

——机密，请保持完整——
-Confidential. Please keep integrated.-
本规格书的内容版权归比亚迪所有，需严格保密，未经书面同意，禁止全部或部分外泄、复制或使用。

The content of this document is the property of BYD Company Limited.
It is to be treated strictly confidential and is not to be disclosed, reproduced, or used in whole or in part without written consent.

Tcell	功率限制 Power limitation
[-20℃,0℃)	≤560W
[0℃,10℃)	≤1335W
[10℃,50℃)	≤1581W
[50℃,60℃)*	≤1200W

Tcell 为电芯表面温度

Tcell means surface temperature of cell。

3.3 产品功能 Product function

①开机：单按电源开关按键可开机，只有在开机状态下其他按键才有效。

Power on: Click ON/OFF button, Other buttons are valid only after power-on

②正常模式：默认开机进入此模式，常开正常模式、省电模式和强制放电模式退出时自动回到正常模式。该模式下，小电流检测时间 1h，之后无设备接入 4h，设备关机，有设备接入，及时清零；故障状态持续 1min 后强制关机。

Standard mode: Default mode after power on, and automatically enter standard mode after exit standard always-on mode, power saving mode and forced discharge mode. In this mode, power off after small current detection time is 1 h and then no equipment connected for 4 h, but time will be reset if there is equipment connected. Power off after fault lasts 1 minute.

③常开-正常模式 Standard always-on mode

功能说明：该模式下 AC 口和 DC 口（整机各功能区）开启后一直保持开启状态，直至低电量关机或手动关关闭，关机后开机进入正常模式。

功能开启：长按 DC 开关 3s 进入。

功能关闭：长按 DC 开关 3s 退出，关机退出。

Description: In this mode, the AC port and DC port (each function of the product) will remain open until the low battery shutdown or manual power off. Product will enter standard mode after next Power on.

Turn on: Press DC button for 3s

Turn off: Press DC button for 3s or power off

④常开-不关闭模式

功能说明：该模式下 AC 口和 DC 口（整机各功能区）开启后一直保持开启状态，直至

——机密，请保持完整——
-Confidential. Please keep integrated.-
本规格书的内容版权归比亚迪所有，需严格保密，未经书面同意，禁止全部或部分外泄、复制或使用。

The content of this document is the property of BYD Company Limited.
It is to be treated strictly confidential and is not to be disclosed, reproduced, or used in whole or in part without written consent.

低电量关机或手动关闭，关机后开机依旧进入此模式。

功能开启：长按 AC 开关 3s 进入。

功能关闭：长按 AC 开关 3s 退出。

Description: In this mode, the AC port and DC port (each function of the product) will remain open until the low battery shutdown or manual turn . Product will enter this mode after next Power on.

Turn on: Press AC button for 3s

Turn off: Press AC button for 3s or power off

⑤强制放电模式 Force discharge mode

功能说明：USB-A/C 接口和 LED 可正常操作使用，将电池过放保护电压降低。

功能开启：0 电量待机状态下，同时长按 DC 键和 LED 键 10s 进入。

功能关闭：关机退出，充电退出，长按 DC 键 10s 退出。

Description: Decrease low voltage protection for the use with USB-A/C and light.

Turn on: Press both the DC button and LED button for 10s when SOC is 0%

Turn off: Power off, charge or press the DC button for 10s

⑥省电模式 Power saving mode

功能说明：一定时间未使用的功能自动关闭：AC 口小电流检测 1h；DC 口小电流检测 1h；待机状态下，2h 无设备接入，自动关机，关机后下次开机仍然保留此功能。

功能开启：双击电源开关按键进入。

功能关闭：双击电源开关按键退出。

Description: Function that has not been used for a certain time will be automatically turned off: AC port small current detection for 1 h; DC port small current detection for 1 h. In the standby mode, product will automatically power off if no equipment is connected for 2 h. This function retained in the next power on.

Turn on: Double click the ON/OFF button.

Turn off: Double click the ON/OFF button.

⑦边充边放：在充电状态下，可支持 AC 和 DC 放电。

Discharge when charging: Product support AC and DC discharge when charging

⑧AC 恒功率：支持给大于额定功率的纯阻性负载工作，此功能通过降低电压来实现。

——机密，请保持完整——
-Confidential. Please keep integrated.-
本规格书的内容版权归比亚迪所有，需严格保密，未经书面同意，禁止全部或部分外泄、复制或使用。

The content of this document is the property of BYD Company Limited.
It is to be treated strictly confidential and is not to be disclosed, reproduced, or used in whole or in part without written consent.

U-turbo mode: Working with purely resistive loads lager than the rated power is supported by reducing the voltage.

⑨照明灯 Light

功能开启：关闭状态下，单击 LED 按键开启“照明灯弱档-照明灯强档-爆闪-SOS-关闭”循环。

功能关闭：开启的任何模式下，长按 LED 按键 3s 关闭。

Turn on: In the off state, click the LED button to start the cycle of "weak -strong -flash -SOS -off".

Turn off: Press the LED button for 3s in any mode that is turned on.

⑩运输模式 Shipment mode

功能说明：出厂模式，避免运输过程中误碰开机导致耗电。

功能开启：三个按键（IOT 按键+LED 按键+DC 按键）一起长按 10s。

功能关闭：充电激活使用。

Description: Factory mode, to avoid power consumption caused by accidental touch during transportation.

Turn on: Press all the three buttons (IOT button + LED button + DC button) together for 10s.

Turn off: Charge.

⑪氛围灯 Atmosphere lamp

功能开启：开机常亮，充电呼吸。

功能关闭：双击 Mute 键。

Turn on: Always on after power on, breathing when charging。

Turn off: Double click mute button

⑫低噪模式 Quiet mode

功能说明：开启低噪模式后，充电输入功率降低，充电时间延长，发热量降低，温度控制至风扇尽可能不转。

功能开启/关闭：单击 Mute 键。

Description: Reduce the heat and control the fan not to rotate as much as possible by reducing charging power, but increase charge time.

Turn on/off: Click mute button

——机密，请保持完整——
-Confidential. Please keep integrated.-
本规格书的内容版权归比亚迪所有，需严格保密，未经书面同意，禁止全部或部分外泄、复制或使用。

The content of this document is the property of BYD Company Limited.
It is to be treated strictly confidential and is not to be disclosed, reproduced, or used in whole or in part without written consent.

4.屏幕显示 Display Screen

4.1 屏幕全景图 Screen photo

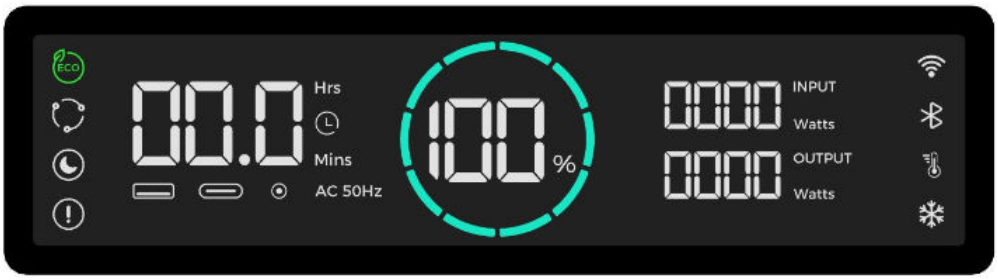

4.2 显示逻辑 Display

序号 No.	操作/模式 Mode	显示方法 Description	
1	背光灯 Backlight	无操作 1.5mins，背光灯半亮；无操作 3mins，背光灯熄灭 Screen half-bright after 1.5mins no operation, Screen off after 3mins no operation	
2	初始化 Initialize	屏幕背光灯亮，全部字符显示。 Screen on, show all characters	
4	开机 Power on	开机时背光灯和字符全亮后显示当前电量和剩余时间。 Show all characters after power on, then show SOC and remain operating time 充电：背光灯和字符全亮后显示当前电量\输入功率和充电剩余时。 Charging: show charge power and full charge time 放电：显示输出功率和放电剩余时间 Discharging: show discharge power and full discharge time	
5	关机 Power off	背光灯和字符全部熄灭，除开关机键其余按键不可用。 Screen off, only ON/OFF button is useful	
6	正常模式 Standard mode	无模式图标。 No mode icon	
7	常开模式 Always-on mode	显示常开模式的图标。 Show always-on mode icon 常开不关闭模式和常开正常模式共用一个图标。 Standard always-on mode and unclosed always-on mode use the same icon 进入常开不关闭模式时，图标常亮；进入常开正常模式时，图标闪烁，闪烁频率 1Hz。 Light up this icon in standard always-on mode, flicker this icon in unclosed always-on mode, flicker frequency is 1Hz	
8	省电模式 Power-saving mode	进入时图标常亮，退出熄灭。 Light up this icon when enter mode, turn off when exit	
9	低噪模式 Quiet mode	进入时图标常亮，退出熄灭。 Light up this icon when enter mode, turn off when exit	
10	故障状态 Fault	故障码 F01-F99，闪烁频率 1Hz。 Fault code F01-F99, flicker frequency is 1Hz	
11	WIFI 图标 WIFI icon	按键开启时进行配对，图标闪烁，配对完成连接时，图标常亮。 Press the IOT button before pairing, the icon blinks when there is on pairing, the icon is on when pairing success.	

——机密，请保持完整——
-Confidential. Please keep integrated.-
本规格书的内容版权归比亚迪所有，需严格保密，未经书面同意，禁止全部或部分外泄、复制或使用。

The content of this document is the property of BYD Company Limited.
It is to be treated strictly confidential and is not to be disclosed, reproduced, or used in whole or in part without written consent.

12	蓝牙图标 Bluetooth icon	按键开启时进行配对，图标闪烁，配对完成连接时，图标常亮。 Press the IOT button before pairing, the icon blinks when there is on pairing, the icon is on when pairing success.	
13	USB-A/C/DC	开启亮图标，关闭则灭. Light up this icon when turn on it, turn off when exit	
14	AC 输出 AC out	开启亮图标,显示频率，关闭则灭。 Light up this icon and show power when turn on it, turn off when exit	AC 50Hz
15	高/低温警告 High/low temperature	显示高温保护或低温保护状态。 Show state of high/low temperature protection	
16	AC 过载保护 AC overload	AC 过载保护时，显示图标。 Light up this icon when AC overload	

5.故障代码 Fault Code

序号 No.	类型 Type	故障名称 Fault	代码 Code	触发条件 Trigger condition	恢复条件 Recovery condition	备注 record
1	BMS	充电过压保护 High charge voltage protection	F01	≥29.2Vdc	≤26.4Vdc	
2		充电过流保护 Charge over current protection	F02		移除充电 Remove charger	60S 自恢复。 Self-recovery after 60s
3		充电高温保护 High temperature charge protection	F03	≥50℃	≤45℃	
4		充电低温保护 Low temperature charge protection	F04	≤0℃	≥5℃	
5		放电欠压保护 Low discharge voltage protection	F05		充电或电芯电压大于 3V 恢复 Charge or Cell voltage > 3V	超时后关机。 Power off when Overtime
6		放电过流保护 Discharge over current protection	F06			
7		放电高温保护 High temperature discharge protection	F07	≥60±3℃	≤55℃	
8		放电低温保护 Low temperature discharge protection	F08	≤-20±3℃	≥-15℃	
9		短路保护 Short circuit protection	F09		充电恢复 Charge	
10		MOS 过温保护 MOS high temperature protection	F10			
11		电芯二级过压保护 Cell second over voltage protection	F11	≥30.4Vdc		

——机密，请保持完整——
-Confidential. Please keep integrated.-
本规格书的内容版权归比亚迪所有，需严格保密，未经书面同意，禁止全部或部分外泄、复制或使用。

The content of this document is the property of BYD Company Limited.
It is to be treated strictly confidential and is not to be disclosed, reproduced, or used in whole or in part without written consent.

12		电芯二级过温保护 Cell second high temperature protection	F12			
13		放电 MOS 损坏 Discharge MOS damage	F13			
14		充电 MOS 损坏 Charge MOS damage	F14			
15		压差过大失效 High voltage difference failure	F15	≥1.5Vdc		
16		电芯欠压锁定 Lock of low cell voltage	F16	单串电池电压小于 1.8V Cell voltage lower than 1.8V		
17		BMS NTC 故障 Failure of NTC in BMS	F17	断线/短路 Open circuit or short circuit		
18	主控板 Main board	BMS 通信故障 BMS communication failure	F18	收发不到或丢失数据 Loss or cant receive data	按键恢复 Click any button	
19		逆变器通信故障 Invert communication failure	F19	收发不到或丢失数据 Loss or cant receive data	按键恢复 Click any button	
20		DC12V 输出过流/DC12V 输出短路 DC 12V port over current or short circuit	F20	≥10.5A 或者＜9V ≥10.5A or ＜9V	按键恢复 Click any button	
21		单体电压采样线断线失效保护 Cell voltage disconnected	F21	电芯压差 CV_Diff≥1500mV 且最高电压电芯和最低电压电芯位置相邻	/	
22		DC12V 电路故障 Failure of DC 12V circuit	F22	＜12.95 或者＞14.25V ＜12.95 or ＞14.25V	按键恢复 Click any button	开机自检时。 In self test when power on
23		DC12V1 输出过流 DC 12V port1 over current	F23	＞7.5A	按键恢复 Click any button	
24		DC12V2 输出过流 DC 12V port2 over current	F24	＞7.5A	按键恢复 Click any button	
25		USB C1 输出过流/USB C1 输出短路 USB C1 port over current or short circuit	F25	＞5.5A 或者＜3V ＞5.5A or ＜3V	按键恢复 Click any button	
26		USB C2 输出过流/USB C2 输出短路 USB C2 port over current or short circuit	F28	＞5.5A 或者＜3V ＞5.5A or ＜3V	按键恢复 Click any button	
27		USB A1 输出过流/USB A1 输出短路 USB A1 port over current or short circuit	F31	＞3.5A 或者＜3V ＞3.5A or ＜3V	按键恢复 Click any button	
28		USB A1 电路故障 Failure of USB A1 circuit	F33	＜4.75V 或者＞5.25V ＜4.75V or＞5.25V	按键恢复 Click any button	开机自检时。 In self test when power on

——机密，请保持完整——
-Confidential. Please keep integrated.-
本规格书的内容版权归比亚迪所有，需严格保密，未经书面同意，禁止全部或部分外泄、复制或使用。

The content of this document is the property of BYD Company Limited.
It is to be treated strictly confidential and is not to be disclosed, reproduced, or used in whole or in part without written consent.

29		USB A2 输出过流 /USB A2 输出短路 USB A2 port over current or short circuit	F34	＞3.5A 或者＜3V ＞3.5A or ＜3V	按键恢复 Click any button	
30		USB A2 电路故障 Failure of USB A2 circuit	F36	＜4.75V 或者＞5.25V ＜4.75V or＞5.25V	按键恢复 Click any button	开机自检时。 In self test when power on
31	双向逆变器 Invert	AC 充电输入欠压 AC charge low voltage	F37	≤90Vac	≥95Vac	
32		AC 充电输入过压 AC charge high voltage	F38	≥150Vac	≤145Vac	
33		PV 充电输入过压 PV charge high voltage	F39	≥53Vdc	≤52Vdc	
34		AC 输出过载 AC overload	F43	1. 未开启恒功率： 1260-1680W（≤0.5S 保护） 1680-2760W（≤0.2S 保护） 大于 2760W（≤0.05S 保护） 2. 开启恒功率时电压低于 70V 或电流大于 15A（0.5S~1.5S）；	按键恢复 Click any button	
35		AC 输出短路 AC short circuit	F44		按键恢复 Click any button	
36		AC 输入过频 High AC charge frequency	F45	≥56Hz	≤54Hz	旁路情况下。 In bypass mode
37		AC 输入欠频 Low AC charge frequency	F46	≤44Hz	≥46Hz	旁路情况下。 In bypass mode
38		逆变器高温 High invert temperature	F49	≥92℃	≤65℃	
39		逆变器 NTC 故障 Failure of NTC in invert	F50	断线/短路 Open circuit or short circuit		

6.产品设计规范 Product Design Specification

6.1 EMI

产品 EMI 设计符合 EN55032 Class B 标准
Product design of EMI up to EN55032 Class B standard。

6.2 外壳防火等级 Case fire ration

UL94-V0。

6.3 ESD 设计标准 Standard of ESD

产品通过±4kV 接触放电和±8kV 空气放电测试。
Product passed ±4kV connect discharge and ±8kV air discharge test

7.保质期 Quality Guarantee Period

产品的保质期从出货之日算起为 2 年。客户使用不当引起的其他问题不在质保之列。另

——机密，请保持完整——
-Confidential. Please keep integrated.-
本规格书的内容版权归比亚迪所有，需严格保密，未经书面同意，禁止全部或部分外泄、复制或使用。

The content of this document is the property of BYD Company Limited.
It is to be treated strictly confidential and is not to be disclosed, reproduced, or used in whole or in part without written consent.

外也不包括与产品制造无关的缺陷情况。

2 years warranty after shipment. Not include condition which is not related to product design and manufacture, such as user misuse.

8.环境要求 Environmental Requirements

充电工作温度 Charge temperature： 4℃~46℃。

放电工作温度 Discharge temperature：-16℃~56℃（产品无冷凝和结冰状态 Without condensation and ice）。

存储环境温度 Storage temperature：-20℃~60℃（产品无冷凝和结冰状态 Without condensation and ice）。

工作环境湿度 Operating humidity：20 ~ 75%。

存储环境湿度 Storage humidity：10 ~ 85%。

9.变更前的通知 Prior Notice of Change

如果产品的规格，材料，制作过程，控制系统发生了变化，由这类变化带来的产品品质和可信度数据会预先通知客户。

It will previous notice customer quality change and test data which is related to the change of product specification, of material, of progress or system.

10.产品图 Product Diagram

以下是产品尺寸图

This is product diagram

——机密，请保持完整——
-Confidential. Please keep integrated.-
本规格书的内容版权归比亚迪所有，需严格保密，未经书面同意，禁止全部或部分外泄、复制或使用。

The content of this document is the property of BYD Company Limited.
It is to be treated strictly confidential and is not to be disclosed, reproduced, or used in whole or in part without written consent.

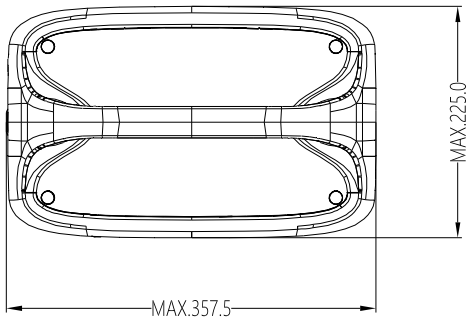

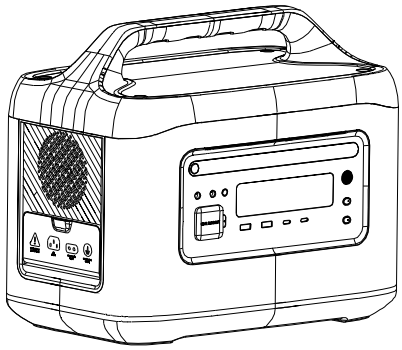

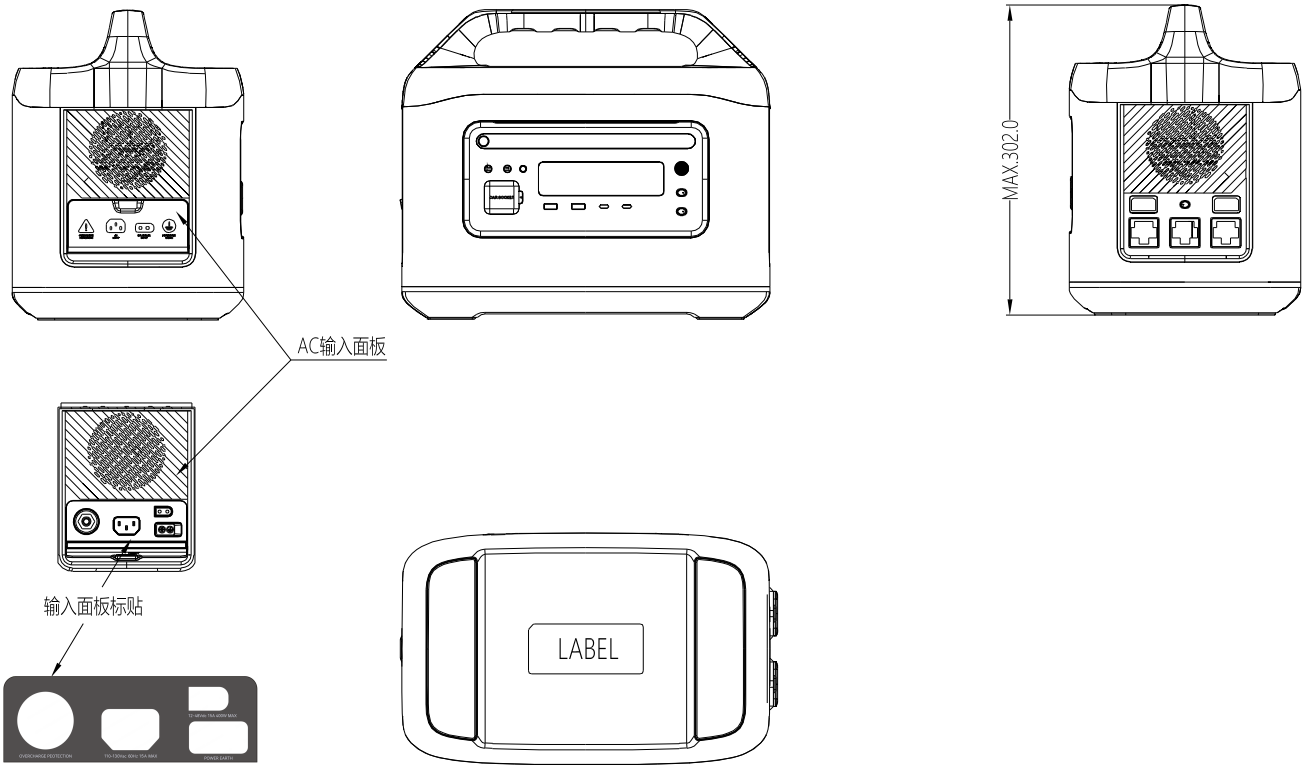

LABEL

1200W Portable Power Station

Model: G1200 Battery Type : LiFePO₄ Battery
Lithium Battery Nominal Energy: 1024Wh 40Ah 25.6V Lithium Battery Rated Energy: 973Wh 38Ah 25.6V
Solar Charging Input : 12-48V⎓15A 400W Max Car Charger Input: 12V/24V⎓8A Max AC Input: 110-130V~ 60Hz 15A Max
Car Charger Output : 13.6V⎓10A 136W Max AC Output (x 5): 120V~ 60Hz 10A 1200VA/1200W Max
USB-C1/C2 Output : Single-Port: 5V⎓3A/9V⎓3A/12V⎓3A/15V⎓3A/20V⎓3A/20V⎓5A 100W Max (Dual-Port: 200W Max)
USB-A1/A2 Output : Single-Port: 5V⎓3A/9V⎓2A/12V⎓1.5A/5V⎓4.5A 22.5W Max (Dual-Port: 45W Max)
DC5521 Output (x 2): Single-Port: 13.6V⎓5A 68W Max (Car Charger+DC5521 x 2=136W MAX) Total Output: 1581W Max
Charging Temperature: 0℃~40℃ (32°F~104°F), Discharging Temperature: -10℃~40℃ (14°F~104°F)
Bluetooth Version: Bluetooth 5.0 Wi-Fi: 2.4GHz (IEEE 802.11 b/g/n) Bluetooth Frequency Range: 2400-2483.5MHz
FCC ID: IC:
Terminal owner: Jiangsu SOHO International Group Corporation Manufacturer : Shenzhen BYD Electronics Co., LTD.

This device complies with Part 15 of the FCC Rules. Operation is subject to the following two conditions:
(1)This device may not cause harmful interference,and
(2)This device must accept any interference received,including interference that may cause undesired operation

Li-ion Bluetooth Made in China

1. Recycle and dispose of this product in accordance with local laws and regulations.
2. Do not throw the product into fire, or disassemble, puncture, or strike it.
3. Please charge and discharge the product regularly.

比亚迪股份有限公司
BYD COMPANY LIMITED

PART NO.	IFR40135-8S2P-B008		
Client PN.			
DRAWN	Fan.Yang	DATE	2024.08.13
CHECKD	Bin.Chen	DATE	2024.08.13
APPROVED	Shengwen.Wang	DATE	2024.08.13
SCALE		UNIT	MM

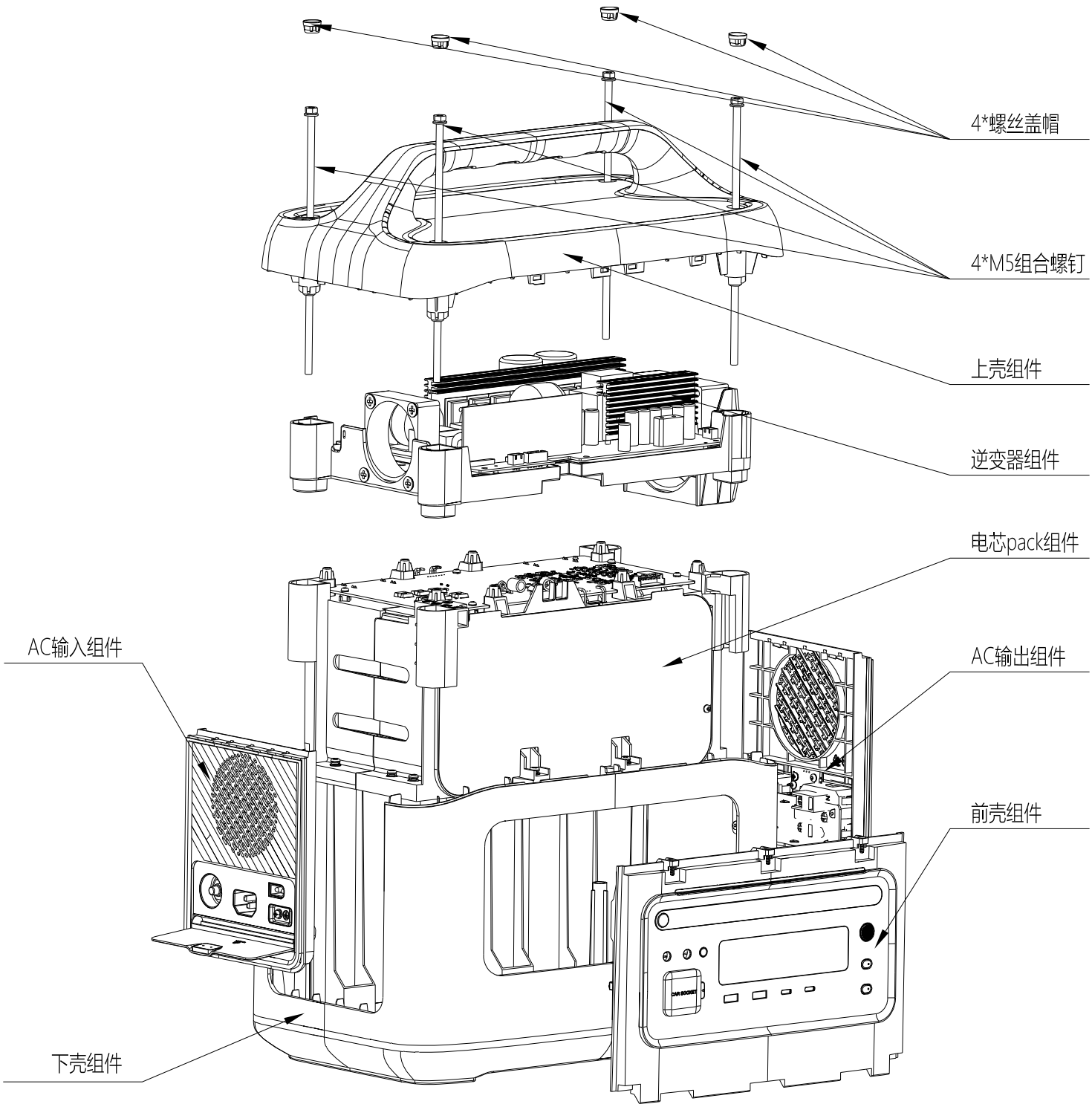

比亚迪股份有限公司
BYD COMPANY LIMITED

PART NO.	IFR40135-8S2P-B008		
Client PN.			
DRAWN	Fan.Yang	DATE	2024.08.13
CHECKD	Bin.Chen	DATE	2024.08.13
APPROVED	Shengwen.Wang	DATE	2024.08.13
SCALE		UNIT	MM

FCC Warning

This device complies with part 15 of the FCC Rules. Operation is subject to the following two conditions:(1) This device may not cause harmful interference, and (2) this device must accept any interference received, including interference that may cause undesired operation.

Any Changes or modifications not expressly approved by the party responsible for compliance could void the user's authority to operate the equipment.

This equipment has been tested and found to comply with the limits for a Class B digital device, pursuant to part 15 of the FCC Rules. These limits are designed to provide reasonable protection against harmful interference in a residential installation. This equipment generates uses and can radiate radio frequency energy and, if not installed and used in accordance with the instructions, may cause harmful interference to radio communications. However, there is no guarantee that interference will not occur in a particular installation. If this equipment does cause harmful interference to radio or television reception, which can be determined by turning the equipment off and on, the user is encouraged to try to correct the interference by one or more of the following measures:

-Reorient or relocate the receiving antenna.

-Increase the separation between the equipment and receiver.

-Connect the equipment into an outlet on a circuit different from that to which the receiver is connected.

-Consult the dealer or an experienced radio/TV technician for help. FCC RF exposure statement:

The equipment complies with FCC radiation exposure limits set forth for an uncontrolled environment. This equipment should be installed and operated with minimum distance between 20cm the radiator your body.

IC Caution:

Radio Standards Specification RSS-Gen, issue 5

-English:

This device contains licence-exempt transmitter(s)/receiver(s) that comply with Innovation, Science and Economic Development Canada’s licence-exempt RSS(s). Operation is subject to the following two conditions:

This device may not cause interference.

This device must accept any interference, including interference that may cause undesired operation of the device.

——机密，请保持完整——
-Confidential. Please keep integrated.-
本规格书的内容版权归比亚迪所有，需严格保密，未经书面同意，禁止全部或部分外泄、复制或使用。

The content of this document is the property of BYD Company Limited.
It is to be treated strictly confidential and is not to be disclosed, reproduced, or used in whole or in part without written consent.

RF exposure statement:

The equipment complies with IC Radiation exposure limit set forth for uncontrolled environment. This equipment should be installed and operated with minimum distance 20cm between the radiator and your body.

-French:

Cet appareil contient des émetteurs / récepteurs exemptés de licence conformes aux RSS (RSS) d'Innovation, Sciences et Développement économique Canada. Le fonctionnement est soumis aux deux conditions suivantes:

Cet appareil ne doit pas causer d'interférences.

Cet appareil doit accepter toutes les interférences, y compris celles susceptibles de provoquer un fonctionnement indésirable de l'appareil.

Déclaration d'exposition RF:

L'équipement est conforme à la limite d'exposition aux radiations de la IC établie pour un environnement non contrôlé. Cet équipement doit être installé et utilisé avec une distance minimale de 20cm entre le radiateur et votre corps.

——机密，请保持完整——
-Confidential. Please keep integrated.-
本规格书的内容版权归比亚迪所有，需严格保密，未经书面同意，禁止全部或部分外泄、复制或使用。

The content of this document is the property of BYD Company Limited.
It is to be treated strictly confidential and is not to be disclosed, reproduced, or used in whole or in part without written consent.