intertek
Total Quality. Assured.

King Electrical Manufacturing Company

TEST REPORT

Model:
KRFLR-120/240V

REPORT NUMBER
240800018THC-001

ISSUE DATE
Mar. 17, 2025

PAGES
22

DOCUMENT CONTROL NUMBER
GFT-OP-10h (28-Nov-2018)
© 2020 Intertek

Radio Spectrum
TEST REPORT

Applicant:	**King Electrical Manufacturing Company** **9131 10th Avenue South Seattle, WA 98108 USA**
Product:	**Wireless Electric Heat Controller**
Model No.:	**KRFLR-120/240V**
FCC ID:	**2BH5BKRFLR-120-240V**
Test Method/ Standard:	**47 CFR FCC Part 15.249 & ANSI C63.10 2013**
FCC Test Firm Registration Number:	**TW0597**
Test By:	**Intertek Testing Services Taiwan Ltd.,** **Hsinchu Laboratory** **No. 17, Ln. 246, Niupu S. Rd., Xiangshan Dist,** **Hsinchu City 300075, Taiwan**

Testing Laboratory
0597

Zero Chen
Engineer

Rico Deng
Reviewer

This report is for the exclusive use of Intertek's Client and is provided pursuant to the agreement between Intertek and its Client. Intertek's responsibility and liability are limited to the terms and conditions of the agreement. Intertek assumes no liability to any party, other than to the Client in accordance with the agreement, for any loss, expense or damage occasioned by the use of this report. Only the Client is authorized to permit copying or distribution of this report and then only in its entirety. Any use of the Intertek name or one of its marks for the sale or advertisement of the tested material, product or service must first be approved in writing by Intertek. The observations and test results in this report are relevant only to the sample tested. This report by itself does not imply that the material, product, or service is or has ever been under an Intertek certification program.

Revision History

Report No.	Issue Date	Revision Summary
240800018THC-001	Mar. 17, 2025	Original report

Table of Contents

Summary of Tests 4

1. General Information 5
   1.1 Identification of the EUT 5
   1.2 Antenna description 5

2. Test specifications 6
   2.1 Test standard 6
   2.2 Operation mode 6

3. Radiated emission test FCC 15.249 (C) 7
   3.1 Test setup & procedure 7
   3.2 Emission limit 9
   3.2.1 Fundamental and harmonics emission limits 9
   3.2.2 General radiated emission limits 10
   3.3 Radiated spurious emission test data 11
   3.3.1 Measurement results: frequency range from 9 kHz to 30 MHz 11
   3.3.2 Measurement results: frequencies equal to or less than 1 GHz 12
   3.3.3 Measurement results: frequency above 1GHz 13
   3.3.4 Measurement results: Fundamental 14

4. 20dB Bandwidth Test 15
   4.1 Test Setup & Procedure 15
   4.2 Operating Environment Condition 15
   4.3 Test Results 15

5. Conducted emission test FCC 15.207 17
   5.1 Measuring instrument setting 17
   5.2 Test Procedure 17
   5.3 Test Diagram 17
   5.4 Limit 18
   5.5 Test Results 19

Appendix A: Test equipment list 21

Appendix B: Measurement Uncertainty 22

Summary of Tests

Test	Reference	Results
Radiated Emission test	15.249(c), 15.209	Pass
Conducted Emission of AC Power	15.207	Pass
Antenna Requirement	15.203	Pass

Note: Please note that the test results with statement of conformity, the decision rules which are based on: Safety Testing: the specification, standard or IEC Guide 115.
Other Testing: the specification, standard and not taking into account the measurement uncertainty.

1. General Information

1.1 Identification of the EUT

Product:	Wireless Electric Heat Controller
Model No.:	KRFLR-120/240V
Operating Frequency:	915.055 MHz
Channel Number:	Single channel
Rating:	120-240V~, 50-60Hz, 25A
Power Cord:	N/A
Sample receiving date:	2025/01/20
Sample condition:	Workable
Test Date(s):	2025/01/23 ~ 2025/3/17

1.2 Antenna description

Antenna Type: Monopole Antenna
Connector Type: Fixed
Antenna Gain: 2.5 dB ± 2dB

2. Test specifications

2.1 Test standard

The EUT was performed according to the procedures in FCC Part 15 Subpart C Paragraph 15.249 for non-spread spectrum devices.

The test of radiated measurements according to FCC Part15 Section 15.33(a) had been conducted and the field strength of this frequency band were all meet limit requirement, thus we evaluate the EUT pass the specified test.

2.2 Operation mode

Power on the EUT and it will transmit continuously.

Mode	Frequency (MHz)	Signal on time (ms)	Signal on & off time (ms)	Duty cycle	Duty Cycle factor
FSK	915.055	10	100	10.00%	20.00

3. Radiated emission test FCC 15.249 (C)

3.1 Test setup & procedure

Radiated emission from 9kHz to 30MHz uses Loop Antenna:

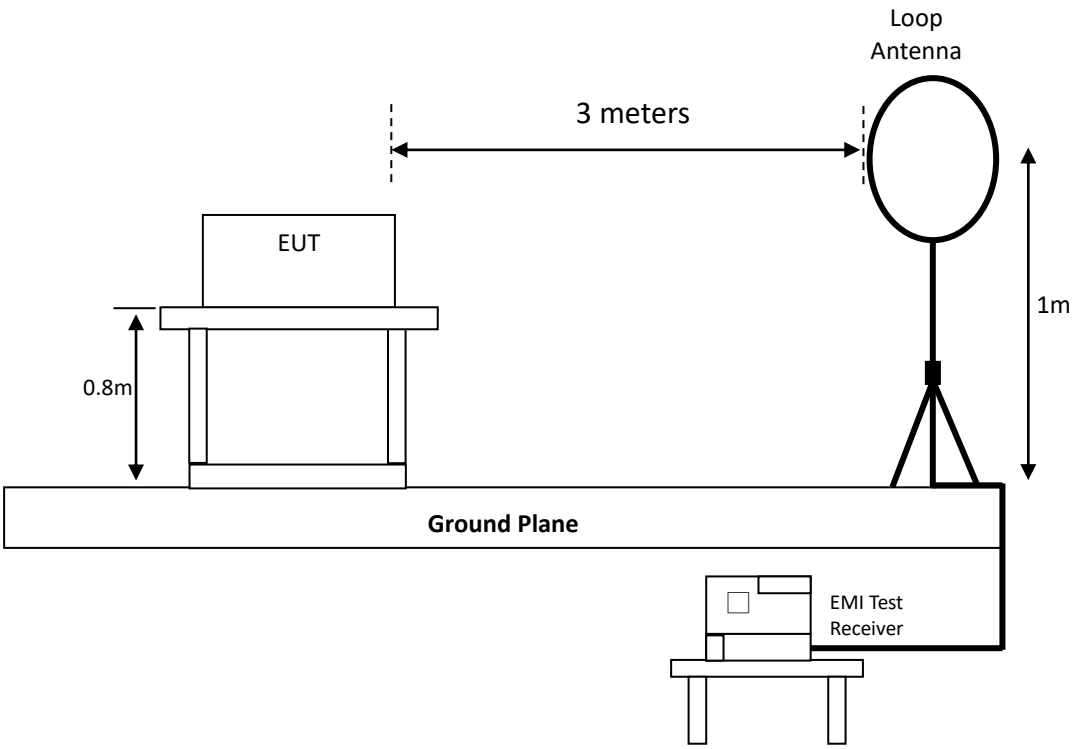

Radiated emission below 1GHz using Bilog Antenna

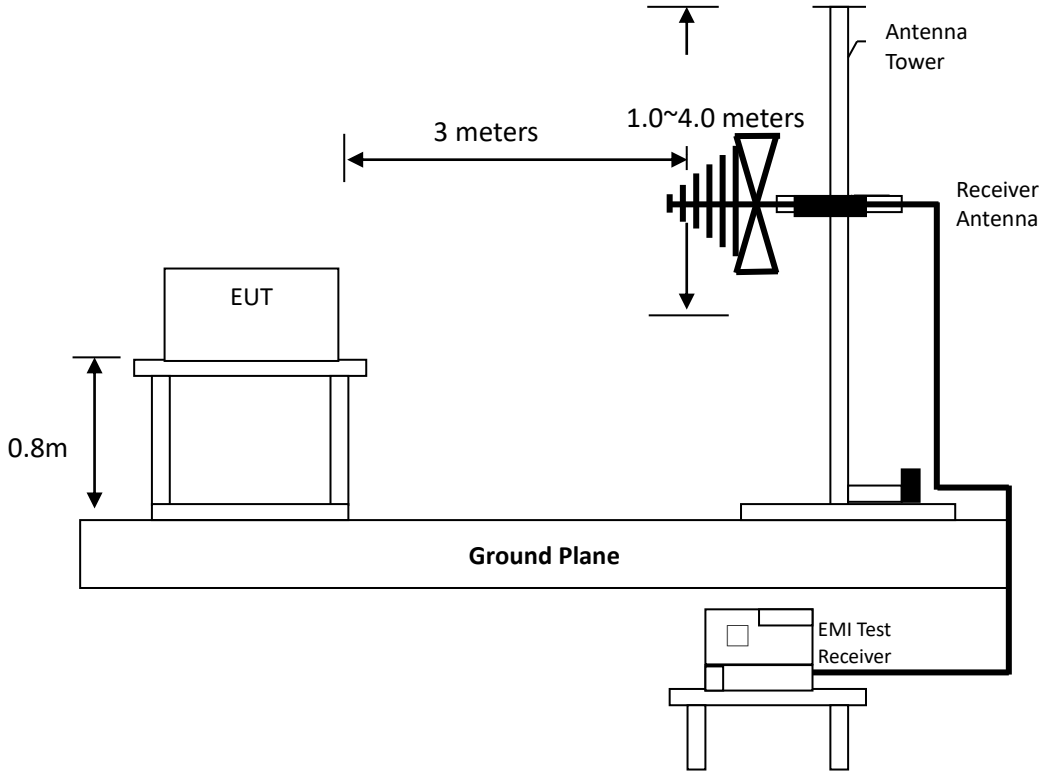

Radiated emission above 1GHz using Horn Antenna

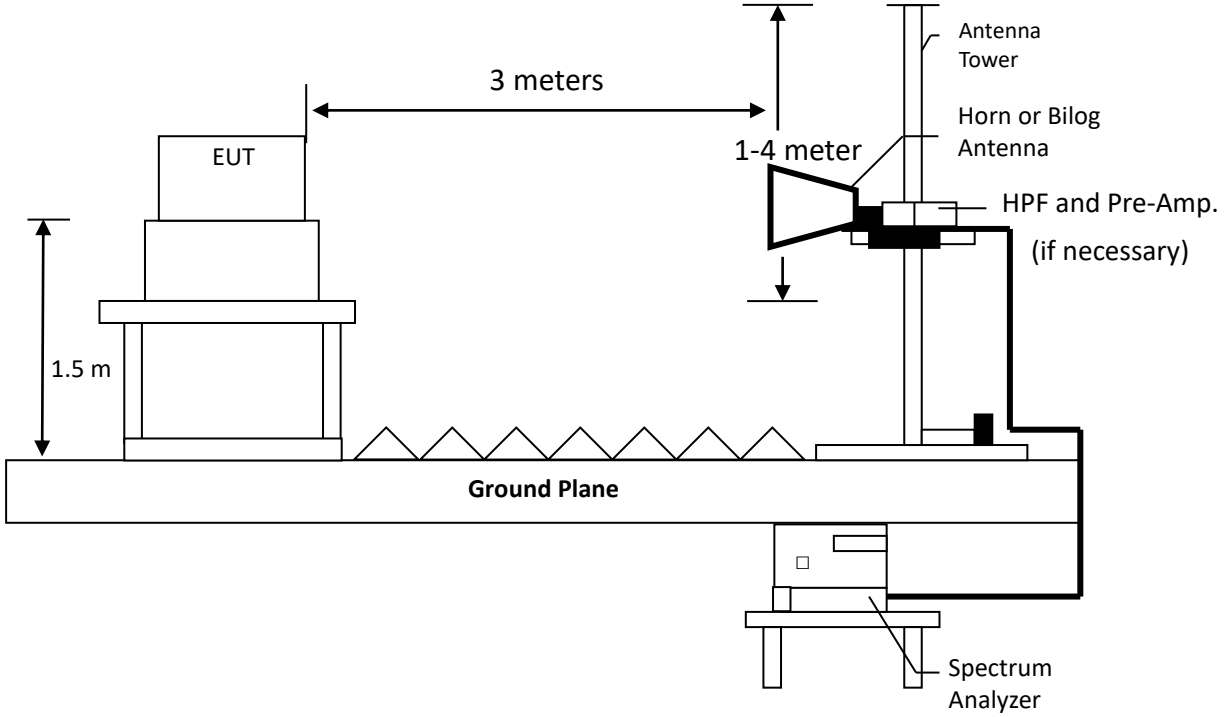

Radiated emissions were invested cover the frequency range from 30MHz to 1000MHz using a receiver RBW of 120kHz record QP reading, and the frequency over 1GHz using a spectrum analyzer RBW of 1MHz and 10Hz VBW record Average reading. (15.209 paragraph), the Peak reading (1 MHz RBW/ 3 MHz VBW) recorded also on the report.
The EUT for testing is arranged on a turntable. If some peripherals apply to the EUT, the peripherals will be connected to EUT and the whole system. During the test, all cables were arranged to produce worst-case emissions. The signal is maximized through rotation. The height of antenna and polarization is changing constantly for exploring for maximum signal level. The height of antenna can be up to 4 meters and down to 1 meter.

The measurement for radiated emission will be done at the distance of three meters unless the signal level is too low to measure at that distance. In the case of the reading under noise floor, a pre-amplifier is used and/or the test is conducted at a closer distance. And then all readings are extrapolated back to the equivalent three meter reading using inverse scaling with distance.

3.2 Emission limit

3.2.1 Fundamental and harmonics emission limits

Frequency (MHz)	Field Strength of Fundamental		Field Strength of Harmonics	
	(mV/m@3m)	(dBuV/m@3m)	(uV/m@3m)	(dBuV/m@3m)
902-928	50	94	500	54

3.2.2 General radiated emission limits

Emissions radiated outside of the specified frequency bands, except for harmonics, shall be attenuated by at least 50dB below the level of the fundamental or to the general radiated emission limits in paragraph 15.209, whichever is the lesser attenuation.

Frequency MHz	15.209 Limits (dBµV/m@3m)
30-88	40
88-216	43.5
216-960	46
Above 960	54

Remark:
1. In the above table, the tighter limit applies at the band edges.
2. Distance refers to the distance in meters between the measuring instrument antenna and the closed point of any part of the device or system

3.3 Radiated spurious emission test data

3.3.1 Measurement results: frequency range from 9 kHz to 30 MHz

Temperature (℃) :	21
Relative Humidity (%) :	68
Test date :	2025/01/23

Antenna Polarization	Frequency (MHz)	Detector	Correction Factor (dB/m)	Reading (dBμV)	Corrected Reading (dBμV/m)	Limit @ 3 m (dBμV/m)	Margin (dB)
Perpendicular	0.58	PK	17.48	21.97	39.45	72.35	-32.90
Perpendicular	1.09	PK	17.49	14.82	32.31	66.86	-34.55
Perpendicular	1.84	PK	17.42	11.93	29.35	69.54	-40.19
Perpendicular	4.90	PK	18.27	9.13	27.40	69.54	-42.14
Perpendicular	10.00	PK	19.68	8.61	28.29	69.54	-41.25
Perpendicular	18.75	PK	20.87	8.83	29.70	69.54	-39.84

Remark: Corr. Factor = Antenna Factor + Cable Loss

Antenna Polarization	Frequency (MHz)	Detector	Correction Factor (dB/m)	Reading (dBμV)	Corrected Reading (dBμV/m)	Limit @ 3 m (dBμV/m)	Margin (dB)
Parallel	0.16	PK	16.79	39.71	56.50	103.58	-47.08
Parallel	0.34	PK	17.14	28.09	45.23	97.00	-51.77
Parallel	0.58	PK	17.48	22.02	39.50	72.35	-32.85
Parallel	1.09	PK	17.49	15.92	33.41	66.86	-33.45
Parallel	2.41	PK	17.48	10.91	28.39	69.54	-41.15
Parallel	5.50	PK	18.85	10.12	28.97	69.54	-40.57

Remark: Corr. Factor = Antenna Factor + Cable Loss

Antenna Polarization	Frequency (MHz)	Detector	Correction Factor (dB/m)	Reading (dBμV)	Corrected Reading (dBμV/m)	Limit @ 3 m (dBμV/m)	Margin (dB)
Ground-parallel	0.58	PK	17.48	22.84	40.32	72.35	-32.03
Ground-parallel	1.12	PK	17.49	13.21	30.70	66.63	-35.93
Ground-parallel	1.87	PK	17.41	11.43	28.84	69.54	-40.70
Ground-parallel	6.64	PK	19.39	9.57	28.96	69.54	-40.58
Ground-parallel	9.01	PK	19.28	9.67	28.95	69.54	-40.59
Ground-parallel	13.69	PK	19.77	9.07	28.84	69.54	-40.70

Remark: Corr. Factor = Antenna Factor + Cable Loss

3.3.2 Measurement results: frequencies equal to or less than 1 GHz

Temperature (℃) :	21
Relative Humidity (%) :	68
Test date :	2025/01/23

Antenna Polarized	Frequency (MHz)	Spectrum Analyzer Detector	Correction Factor (dB/m)	Reading (dBμV)	Corrected Reading (dBμV/m)	Limit @ 3 m (dBμV/m)	Margin (dB)
Horizontal	46.49	PK	20.42	2.70	23.12	40.00	-16.88
Horizontal	163.86	PK	20.64	2.65	23.29	43.50	-20.21
Horizontal	329.73	PK	22.60	2.79	25.39	46.00	-20.61
Horizontal	453.89	PK	25.83	6.04	31.87	46.00	-14.13
Horizontal	748.77	PK	31.58	4.53	36.11	46.00	-9.89
Horizontal	870.99	PK	32.79	3.45	36.24	46.00	-9.76

Remark: Corr. Factor = Antenna Factor + Cable Loss

Antenna Polarized	Frequency (MHz)	Spectrum Analyzer Detector	Correction Factor (dB/m)	Reading (dBμV)	Corrected Reading (dBμV/m)	Limit @ 3 m (dBμV/m)	Margin (dB)
Vertical	42.61	PK	20.07	14.96	35.03	40.00	-4.97
Vertical	59.10	PK	20.30	6.04	26.34	40.00	-13.66
Vertical	153.19	PK	20.60	2.79	23.39	43.50	-20.11
Vertical	453.89	PK	25.83	5.50	31.33	46.00	-14.67
Vertical	531.49	PK	27.18	4.96	32.14	46.00	-13.86
Vertical	804.06	PK	32.22	3.98	36.20	46.00	-9.80

Remark: Corr. Factor = Antenna Factor + Cable Loss

3.3.3 Measurement results: frequency above 1GHz

Temperature (℃) :	21
Relative Humidity (%) :	68
Test date :	2025/01/23

Mode	Frequency (MHz)	Spectrum Analyzer Detector	Ant. Pol. (H/V)	Correction Factor (dB/m)	Reading (dBµV)	Corrected Reading (dBµV/m)	Limit @ 3 m (dBµV/m)	Margin (dB)
TX	1830.11	PK	H	-20.20	82.07	61.87	74.00	-12.13
	1830.11	AV	H	---	---	41.87	54.00	-12.13
	2745.16	PK	H	-15.47	69.72	54.25	74.00	-19.75
	2745.16	AV	H	---	---	34.25	54.00	-19.75
	3660.22	PK	H	-13.27	66.16	52.89	74.00	-21.11
	4575.27	PK	H	-9.66	57.82	48.16	74.00	-25.84
	5490.33	PK	H	-5.73	59.88	54.15	74.00	-19.85
	5490.33	AV	H	---	---	34.15	54.00	-19.85
	6405.38	PK	H	-1.92	48.30	46.38	74.00	-27.62
	1830.11	PK	V	-20.20	79.21	59.01	74.00	-14.99
	1830.11	AV	V	---	---	39.01	54.00	-14.99
	2745.16	PK	V	-15.47	67.69	52.22	74.00	-21.78
	3660.22	PK	V	-13.27	67.47	54.20	74.00	-19.80
	3660.22	AV	V	---	---	34.20	54.00	-19.80
	4575.27	PK	V	-9.66	56.91	47.25	74.00	-26.75
	5490.33	PK	V	-5.73	62.13	56.40	74.00	-17.60
	5490.33	AV	V	---	---	36.40	54.00	-17.60
	6405.38	PK	V	-1.92	49.73	47.81	74.00	-26.19

Remark: 1. Correction Factor = Antenna Factor + Cable Loss - Pre_Amplifier Gain
2. AV Corrected Reading = PK Corrected Reading + Duty cycle correction factor (-20.00)

3.3.4 Measurement results: Fundamental

Temperature (℃) :	21
Relative Humidity (%) :	68
Test date :	2025/01/23

Frequency (MHz)	Spectrum Analyzer Detector	Ant. Pol. (H/V)	Correction Factor (dB/m)	Reading (dBµV)	Corrected Reading (dBµV/m)	Limit @ 3 m (dBµV/m)	Margin (dB)
915.055	PK	H	33.88	61.08	94.96	114.00	-19.04
	AV	H	---	---	74.96	94.00	-19.04
	PK	V	33.88	60.66	94.54	114.00	-19.46
	AV	V	---	---	74.54	94.00	-19.46

Remark: 1. Correction Factor = Antenna Factor + Cable Loss
2. AV Corrected Reading = PK Corrected Reading + Duty cycle correction factor (-20.00)

4. 20dB Bandwidth Test

4.1 Test Setup & Procedure

The test procedure was according to FCC measurement guidelines DA 00-705.

The 20dB bandwidth per FCC §15.247(a)(1) was measured using a 50 ohm spectrum analyzer with the resolutions bandwidth set≧ 1% of 20dB Bandwidth, the video bandwidth ≧ RBW, and the SPAN may equal to approximately 2 to 3 times the 20dB bandwidth. The test was performed at 3 channels (lowest, middle and highest channel). The maximum 20dB modulation bandwidth is in the following Table.

4.2 Operating Environment Condition

Temperature (℃) :	21
Relative Humidity (%) :	59
Test date :	2025/03/17

4.3 Test Results

Mode	Frequency (MHz)	20dB Bandwidth (MHz)
FSK	915.055	0.40

Chain0 : 20dB BW @ 915.055MHz

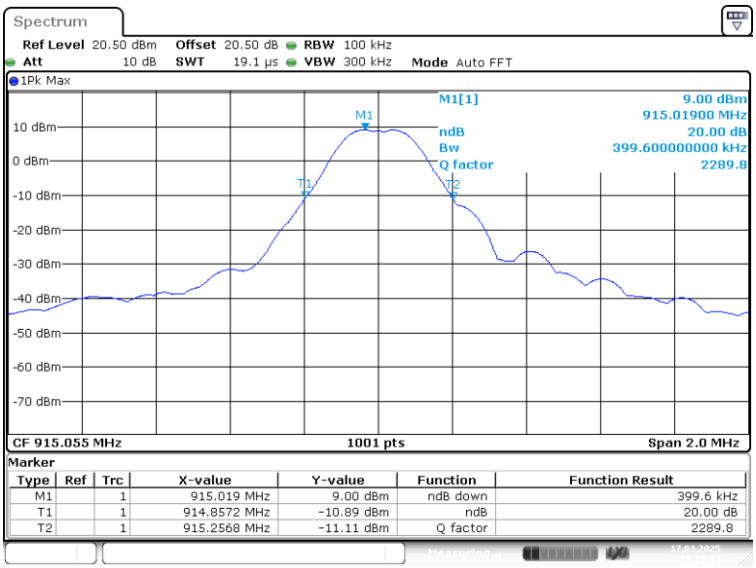

Marker

Type	Ref	Trc	X-value	Y-value	Function	Function Result
M1		1	915.019 MHz	9.00 dBm	ndB down	399.6 kHz
T1		1	914.8572 MHz	-10.89 dBm	ndB	20.00 dB
T2		1	915.2568 MHz	-11.11 dBm	Q factor	2289.8

Date: 17.MAR.2025 15:29:34

5. Conducted emission test FCC 15.207

5.1 Measuring instrument setting

Receiver Function	Setting
Detector	QP
Start frequency	0.15MHz
Stop frequency	30MHz
IF bandwidth	9 kHz
Attenuation	10dB

5.2 Test Procedure

Step 1	Configure the EUT according to ANSI C63.10:2013. The EUT or host of EHT has to be placed 0.4 meter far from the conducting wall of the shielding room and at least 80 centimeters from any other grounded conducting surface.
Step 2	Connect EUT or host of EUT to the power mains through a line impedance stabilization network.
Step 3	All the companion devices are connected to the other LISN. The LISN should provide 50Uh/50ohms coupling impedance.
Step 4	The frequency range from 150 kHz to 30MHz was searched.
Step 5	Set the test-receiver system to peak detector and specified bandwidth with maximum hold mode.
Step 6	The measurement has to be done between each power line and ground at the power terminal.

5.3 Test Diagram

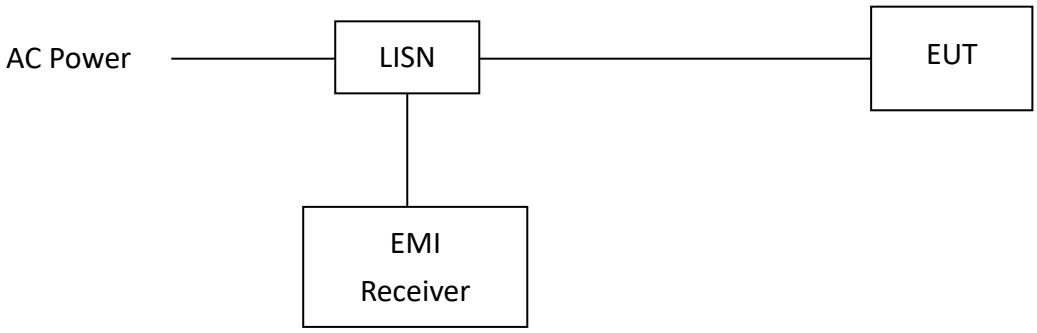

5.4 Limit

Frequency (MHz)	Conducted Limit (dBuV)	
	Q.P.	Ave.
0.15~0.50	66 – 56	56 – 46
0.50~5.00	56	46
5.00~30.0	60	50

5.5 Test Results

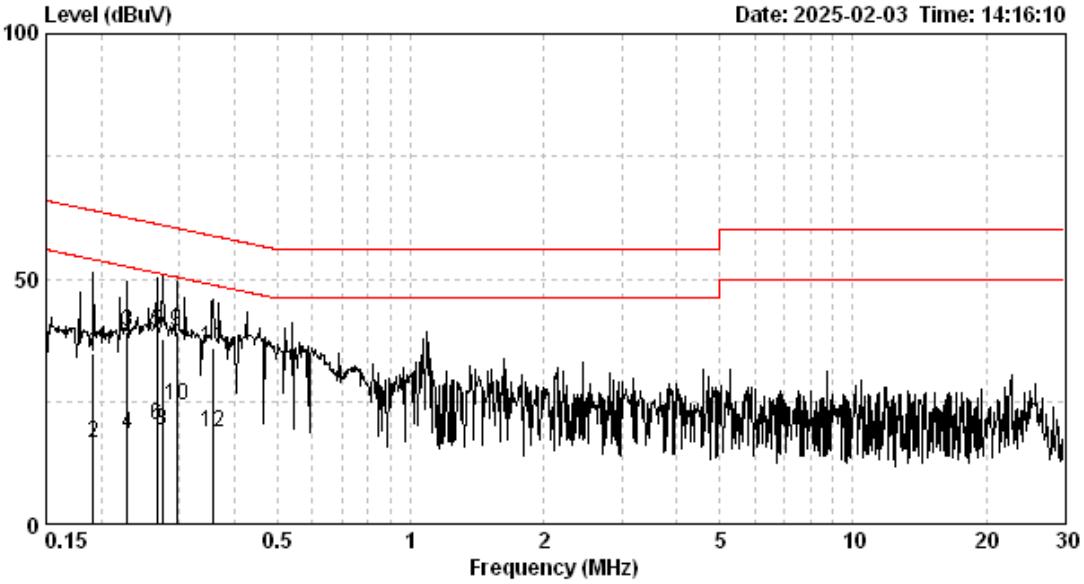

Test voltage :AC 120V / 60Hz
Temp. / R.H. :20 °C / 52 %
Atmospheric pressure :1009 hPa

Phase	Frequency (MHz)	Corr. Factor (dB)	Reading QP (dBuV)	Level QP (dBuV)	Limit QP (dBuV)	Reading AV (dBuV)	Level AV (dBuV)	Limit AV (dBuV)	Margin (dB) QP	Margin (dB) AV
LINE	0.191	9.58	25.06	34.64	63.98	7.06	16.64	53.98	-29.34	-37.34
LINE	0.229	9.58	29.71	39.29	62.48	8.66	18.23	52.48	-23.19	-34.25
LINE	0.267	9.57	29.49	39.06	61.20	10.70	20.27	51.20	-22.14	-30.93
LINE	0.274	9.57	28.11	37.68	60.98	9.32	18.90	50.98	-23.30	-32.09
LINE	0.296	9.57	29.49	39.07	60.37	14.44	24.01	50.37	-21.30	-26.36
LINE	0.358	9.57	26.17	35.74	58.78	9.22	18.79	48.78	-23.05	-30.00

Remark:
1. Corr. Factor (dB) = LISN Factor (dB) + Cable Loss (dB)
2. Level (dBuV) = Corr. Factor (dB) + Reading (dBuV)
3. Margin (dB) = Level (dBuV) – Limit (dBuV)

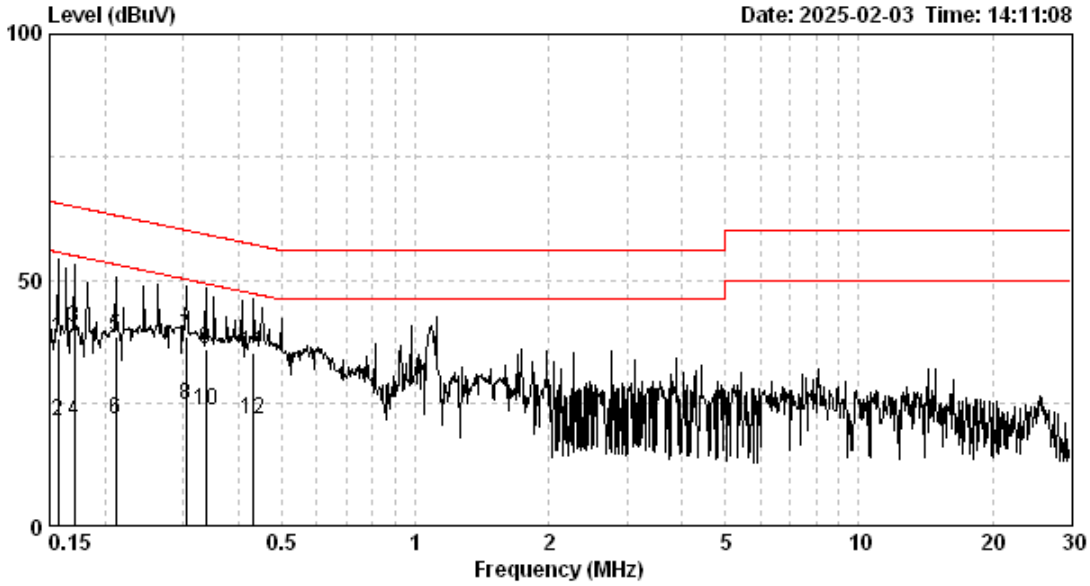

Test voltage :AC 120V / 60Hz
Temp. / R.H. :20 °C / 52 %
Atmospheric pressure :1009 hPa

Phase	Frequency (MHz)	Corr. Factor (dB)	Reading QP (dBuV)	Level QP (dBuV)	Limit QP (dBuV)	Reading AV (dBuV)	Level AV (dBuV)	Limit AV (dBuV)	Margin (dB) QP	Margin (dB) AV
NEUTRAL	0.156	9.57	28.64	38.21	65.65	11.63	21.20	55.65	-27.44	-34.45
NEUTRAL	0.170	9.57	30.76	40.34	64.94	11.77	21.34	54.94	-24.61	-33.60
NEUTRAL	0.212	9.58	28.81	38.39	63.14	11.87	21.45	53.14	-24.75	-31.69
NEUTRAL	0.305	9.58	28.89	38.48	60.10	14.94	24.52	50.10	-21.63	-25.58
NEUTRAL	0.337	9.59	26.38	35.97	59.27	13.88	23.47	49.27	-23.30	-25.80
NEUTRAL	0.433	9.59	25.42	35.01	57.20	11.94	21.52	47.20	-22.19	-25.67

Remark:
1. Corr. Factor (dB) = LISN Factor (dB) + Cable Loss (dB)
2. Level (dBuV) = Corr. Factor (dB) + Reading (dBuV)
3. Margin (dB) = Level (dBuV) – Limit (dBuV)

Appendix A: Test equipment list

Test Equipment	Brand	Model No.	Serial No.	Calibration Date	Next Calibration Date
EMI Test Receiver	KEYSIGHT	N9038B	MY63060107	2024/03/06	2025/03/05
Spectrum analyzer	KEYSIGHT	N9020B	MY63450146	2024/03/05	2025/03/04
Spectrum analyzer	KEYSIGHT	N9020B	MY63450146	2025/02/14	2026/02/13
Signal Analyzer	R&S	FSV40	101532	2024/07/12	2025/07/11
Active Loop Antenna	SCHWARZBECK	FMZB1519	1519-067	2024/12/11	2025/12/10
Broadband Antenna	SCHWARZBECK	VULB 9168	9168-172	2024/12/30	2025/12/29
Horn Antenna	SCHWARZBECK	BBHA 9120 D	9120D-456	2024/12/10	2025/12/09
Pre-Amplifier	SGH	SGH118(45dB)	20220105-1	2025/01/14	2026/01/13
Cable	SUHNER	SUCOFLEX 104	295105/4	2024/03/02	2025/03/02
Cable	SUHNER	SUCOFLEX 104	295105/4	2025/02/27	2026/02/26
Cable	SUHNER	SUCOFLEX 104P	CB0005	2024/03/02	2025/03/02
Cable	SUHNER	SUCOFLEX 104P	CB0005	2025/02/27	2026/02/26
RF Cable	SUHNER	SUCOFLEX 104P	9403 / 4P	2024/11/22	2025/11/21
Power Meter	Anritsu	ML2495A	0844001	2024/12/07	2025/12/06
Power Sensor	Anritsu	MA2491A	031543	2024/12/07	2025/12/06
20dB Attenuator	PE	PE7001-20	N/A	2024/05/23	2025/05/22
966-2_3m Semi-Anechoic Chamber	CHANCE MOST	CEM-966_2	N/A	2024/07/30	2025/07/29
Test software	Audix	e3	V9	NCR	NCR
LISN	R&S	ENV216	101160	2024/06/26	2025/06/25
Cable	SUHNER	EMCCFD300-BM-NM-6000	170502	2024/06/25	2025/06/24
EMI Test Receiver	R&S	ESCI	100018	2024/07/23	2025/07/22
Test software	Audix	e3	V4.20040112L	NCR	NCR
Test site	Intertek	Con-2	N/A	NCR	NCR

Note: No Calibration Required (NCR).

Appendix B: Measurement Uncertainty

This uncertainty represents an expanded uncertainty expressed at approximately the 95% confidence level using a coverage factor of *k*=2.0.

Item	Uncertainty
Radiated disturbances from 9kHz~30MHz in a semi-anechoic chamber at a distance of 3m	2.73 dB
Vertically polarized radiated disturbances from 30MHz~1GHz in a semi-anechoic chamber at a distance of 3m	3.91 dB
Horizontally polarized radiated disturbances from 30MHz~1GHz in a semi-anechoic chamber at a distance of 3m	3.49 dB
Vertically polarized Radiated disturbances from 1GHz~18GHz in a semi-anechoic chamber at a distance of 3m	3.71 dB
Horizontally polarized Radiated disturbances from 1GHz~18GHz in a semi-anechoic chamber at a distance of 3m	3.71 dB
Vertically polarized Radiated disturbances from 18GHz~40GHz in a semi-anechoic chamber at a distance of 3m	3.26 dB
Horizontally polarized Radiated disturbances from 18GHz~40GHz in a semi-anechoic chamber at a distance of 3m	3.26 dB
Conducted Measurement	0.69 dB
AC Power Line Conducted Emission	1.31 dB