Digital Microscope

USER GUIDE
用户手册

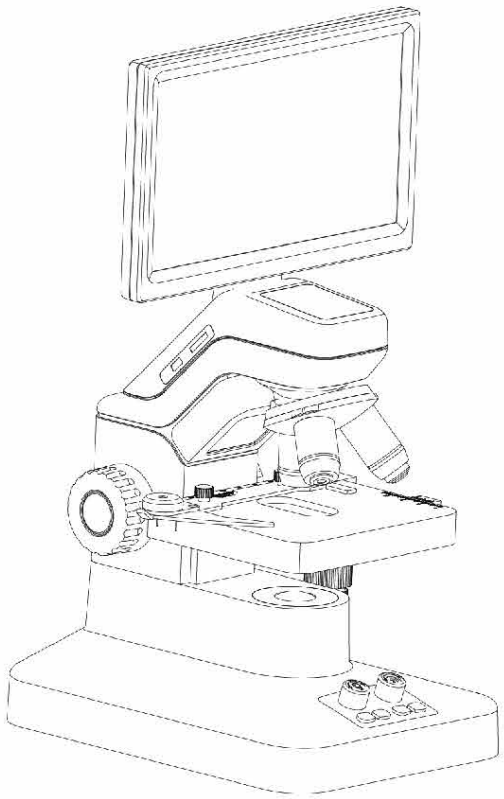

When the battery is installed for the first time, the microscope must be plugged into the power cord and energized for 2 seconds before the battery protection function is activated.

CATALOGUE >>> EN

1.Introduction to the structure and functions of microscopes 03

2.Installing and turning on and off the microscope 05

3.Image observation usage process 06

4.Microscope function operation instructions 07

5.WIFI function operation instructions 09

6.Microscope connects to computer 10

7.Microscope connects to TV 11

8.Microscope parameters 11

9.Precautions 12

10.Troubleshooting 13

This manual includes the usage instructions of the digital microscope.Please read this manual carefully before use and keep it with the instrument. The product color matching in the manual is for reference only, please refer to the actual object.

目录 >>> CN

一、显微镜结构功能介绍 —— 14

二、显微镜的安装和开关机 —— 16

三、图像观察使用流程 —— 17

四、显微镜功能操作说明 —— 18

五、WIFI功能操作说明 —— 20

六、显微镜连电脑 —— 21

七、显微镜连接电视 —— 22

八、显微镜参数 —— 22

九、注意事项 —— 23

十、故障排除 —— 24

本说明书详细阐述 智能 数码显微镜的使用方法说明。请在使用前仔细阅读本说明，并将其随附仪器。说明书中产品配色仅供参考，请以实物为准。

Screen material: LCD

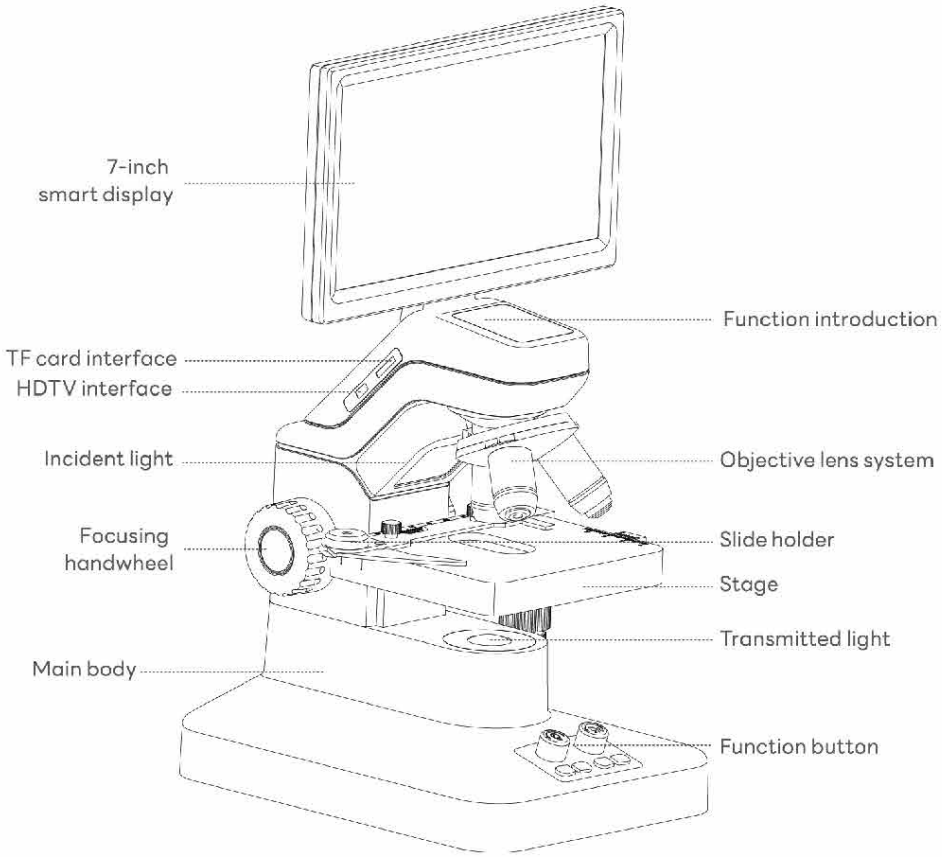

Front side view

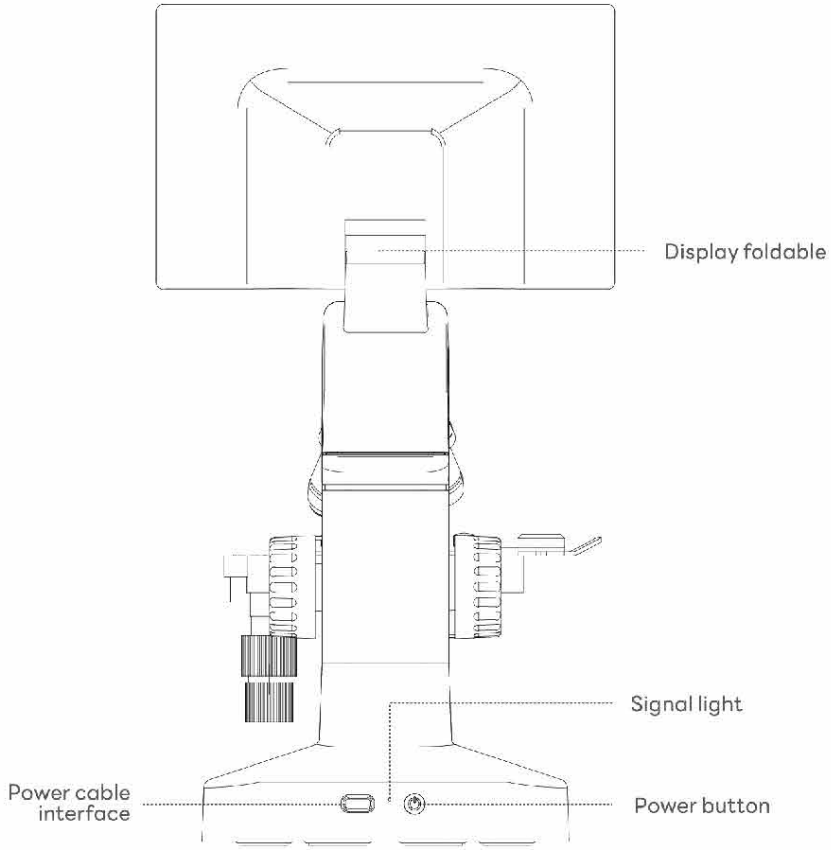

Back side view

(Figure 1)

① Install the battery

Open the battery cover, install the battery (18650 battery), and then close the battery cover (Figure 1).

(Figure 2)

② Power active

Each time after installing the battery, you must first use the power cable to power up the microscope and activate the battery management circuit (1-2 seconds is enough) (Figure 2).

(Figure 3)

③ Turn on/off

Turn on: Short press the power button on the back of the microscope until the indicator light on.

Turn off: Press and hold the power button and wait 2-3 seconds until the microscope turns off (Figure 3).

(Figure 4)

④ Charge

Battery indication: normal use; charging state (Figure 4).

(Figure 5)

① Turn on

Press the switch button on the back until the indicator light on (Figure 5).

(Figure 6)

② The use of glass slide

Open the specimen clip of the mobile platform, place the glass slide and fix it (Figure 6).

(Figure 7)

③ Use of stage

Tighten the XY axis knob of the platform by hand and align the specimen to the center of the objective lens. When viewing the specimen, twist the XY axis knob by hand to move the specimen and view other parts of the specimen (Figure 7).

(Figure 8)

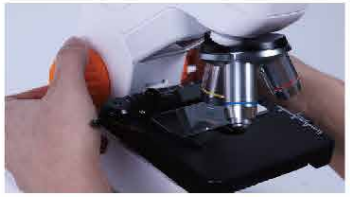

(Figure 9)

④ Use of objective lens and focusing

- Turn the objective lens to the center (vertical direction) (Figure 8)
- According to the type of specimen, choose the appropriate lens to view it (generally view it from a low magnification lens first) (Figure 8)
- After selecting the appropriate objective lens, slowly rotate the focus knob upward or downward until the image is clear (Figure 9)

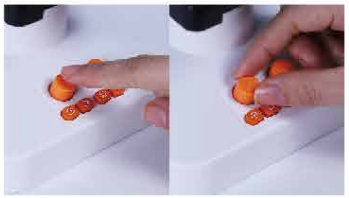

(Figure 10)

① Light source adjustment

Press the light source knob to switch the incident and transmitted light, and rotate it left or right to adjust the brightness of the light source (Figure 10).

(Figure 11)

② Button operation instructions

Press the WIFI icon button once, the display will show the operation instructions of the button, press it again to exit the operation instructions page (Figure 11).

(Figure 12)

③ Digital amplification adjustment

Turn the WIFI icon knob, adjust image digital enlargement or reduction (Figure 12).

(Figure 13)

④ Photograph

Press the photo button to switch to photo mode, and press it again to take photos (Figure 13).

(Figure 14)

⑤ Video

Press the video button to switch to video mode, press it again to start recording (at this time the display will light up with a flashing red dot), press it again to stop recording (Figure 14).

(Figure 15)

⑥ Album

Press the album button and the display will enter the album list to view photos or videos. Rotate the WIFI icon knob to rotate the desired image file, press it again to play the image file; press the album button again to exit the album (Figure 15).

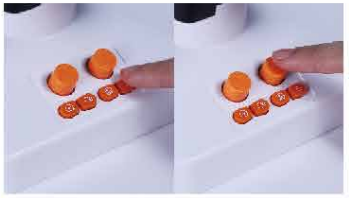

(Figure 16)

⑦ Menu button

Press the menu button to enter the first level menu page. You can rotate the WIFI icon knob to select the parameters and language selection that need to be set. After selection, press the WIFI icon button to turn it into the OK button (Figure 16).

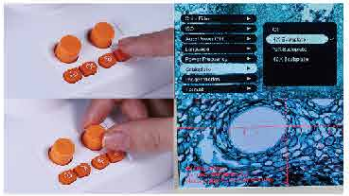

(Figure 17)

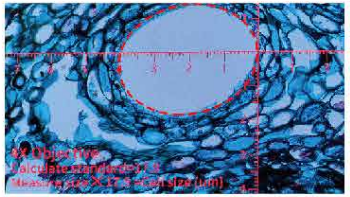

(Figure 18)

⑧ Measure

- Press the menu button to enter the first-level menu page, select the measuring ruler option by rotating the WIFI icon knob, select a different ruler according to different objective lenses (such as: now 4X objective lens, select the 4X ruler), and then press the knob to confirm, and finally press the menu key to exit the menu page; (Figure 17).
- Measurement and conversion method :(as shown in the figure, the diameter of the circular hole is measured by 40 small cells from the scale,40*17.9(4X objective)=716UM(micron), the conversion millimeter is equal to.716MMO)(Figure 18).
- Calculation formula:

The number of small cells measured * base size (micron)

X objective base 17.9; 10X objective base 7.37;

40X objective base 1.86

5. WIFI function operation instructions >>> EN

(Figure 19)

① Turn on WIFI

Press and hold the WIFI icon button (2 seconds) to enter WIFI mode. At this time, the microscope emits a WIFI signal and displays a password ID(TN300_488XXXXXXXXX)Default password (12345678) (Figure 19).

(Figure 20)

② Mobile APP connects to WIFI

Click the Connect WIFI button on the APP to enter the WIFI settings page, select the WIFI corresponding to the microscope WIFI signal name (TN300_488XXXXXXXXX) and connect. Return to the APP main interface and wait for the "Start Observation" text to be displayed (different mobile different response speeds) (Figure 20).

(Figure 21)

③ Start observation

After clicking to start observation, you will enter the real-time image preview page, where you can control the microscope to take photos, record videos, photos enlargement or reduction, and adjust colors (Figure 21).

(Figure 22)

④ APP enter album

- Click the device album icon to enter the device album; (Figure 22).
- Click the local album icon to enter the local album; (Figure 22).

Note: The device album refers to the album in the memory card of the microscope, and the local album is the album in the mobile APP.

(Figure 23)

⑤ Microscope controls APP

The button control of the microscope can also control the APP to take photos, record videos, enter the album, adjust color, and enter the menu (Figure 23).

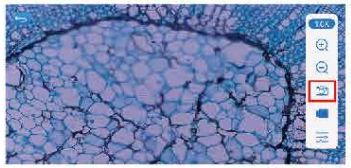

(Figure 24)

⑥ Other instructions

While the APP takes photos and videos and saves them in the photo album of the mobile phone APP, the memory card of the microscope will also simultaneously save the images and videos data (Figure 24).

6. Microscope connects to computer >>> EN

(Figure 25)

① Install computer software

Install StrangeView imaging software on the computer (Figure 25).

(Figure 26)

② Connect data cable

Plug one end of the microscope Type-C data cable into the computer USB and the other end into the microscope Type C interface. At this time, the microscope will display 3 options (memory, camera, charging). Rotate the WIFI icon knob, select the camera, and then press the WIFI knob to confirm. (Figure 26).

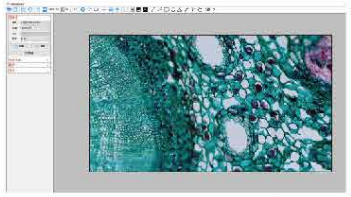

(Figure 27)

③ Computer viewing images

After connecting to the computer, it will take 1-3 seconds to automatically install the driver, then open the image software MatataXplore, and you can view the images in real time on the computer and edit the images (Figure 27).

7. Microscope connects to TV >>> EN

(Figure 28)

① Video data cable connects to TV

Plug the video data cable into the HDTV jack of the microscope, and the other end into the TV port, then select the input signal source corresponding to the TV, and the TV can watch (Figure 28).

8. Microscope parameters >>> EN

Product name	Digital microscope
Product color	White
Sensor	Optical Format 1/2.8"
	Pixel Size 2.9 μm x 2.9 μm
	SENSOR resolution 1920(H) x 1080(V)
Pixel specifications	200w
Objective lens	achromatic 4X, 10X, 40X
Screen size	7-inch high-definition IPS screen
Display resolution	1024*600

9. Precautions >>> EN

① Operation

- Components should not be exposed to direct sunlight and should be placed in a dry, clean environment away from high temperatures and severe vibrations.
- The microscope is a precision instrument and should be handled with care to avoid shock and collision during transportation.
- In order not to affect the clarity of the image, avoid dirt or fingerprints from leaving on the lens surface.
- Do not turn the left and right zoom handwheels in opposite directions at the same time, otherwise a malfunction may occur.

② Maintenance

- All lenses should be kept clean. If there is fine dust, you can use a blower to blow it away or gently wipe it with cotton gauze; if there are oil stains and fingerprints, you can use cotton gauze dipped in a small amount of a 3:7 ethanol-ether ether mixture to gently wipe it away.
- Do not use organic solvents to wipe the remaining surfaces of the microscope, especially the surfaces of plastic products. Neutral detergent should be used for cleaning.
- You should not disassemble or assemble the microscope by yourself to avoid affecting the performance of the microscope.
- When the microscope is not in use, it should be covered with a dust cover to prevent it from coming into contact with dust, and stored in a moisture-proof place to avoid rust or mold.
- To maintain the performance of the microscope, regular inspections are recommended (contact your nearest dealer for details).

① Unable to turn on after installing battery
When the battery is installed for the first time or is installed again after being removed, it needs to be activated by plugging into the microscope power cable interface to start the battery power supply.

② After the microscope is turned on, it automatically turns off
Generally, the battery power is low. You can see the battery power indicator icon in the upper right corner of the display screen, or there is a flashing indicator light on the back of the microscope, which indicating that the battery power is low (Figure 4).

③ Display image has black corners
Generally, the objective lens converter of the microscope is not turned in place. There will be obvious positioning resistance after the objective lens is turned in place. The objective lens must be perpendicular to the stage.

④ Microscope cannot see image
Generally, the specimen is not aligned with the center of the lens. First, turn the 40X objective lens downward, then adjust the XY axis knob to align the specimen with the center of the lens, and slowly adjust the focus up and down until the image is clear.

⑤ The produced specimen viewing image is dark and unclear
This is because the specimen is thick and the light from the bottom light source cannot penetrate the specimen.

⑥ Unable to see plant leaves or object surfaces
This type of specimen is impermeable to light. You need to press the light source knob to switch the incident light to view the specimen.

⑦ Why is there no image when connecting to HDTV TV
When connecting an HDMI signal cable to a TV or other display device with HDMI, pay attention to setting the input signal source of the display device.

⑧ No image when the microscope is connected to the computer via USB
The microscope is connected to the computer via USB. A menu will appear on the microscope's display. You need to select the connection mode and then press the WIFI icon knob.

CN >>>

屏幕材质：7”IPS

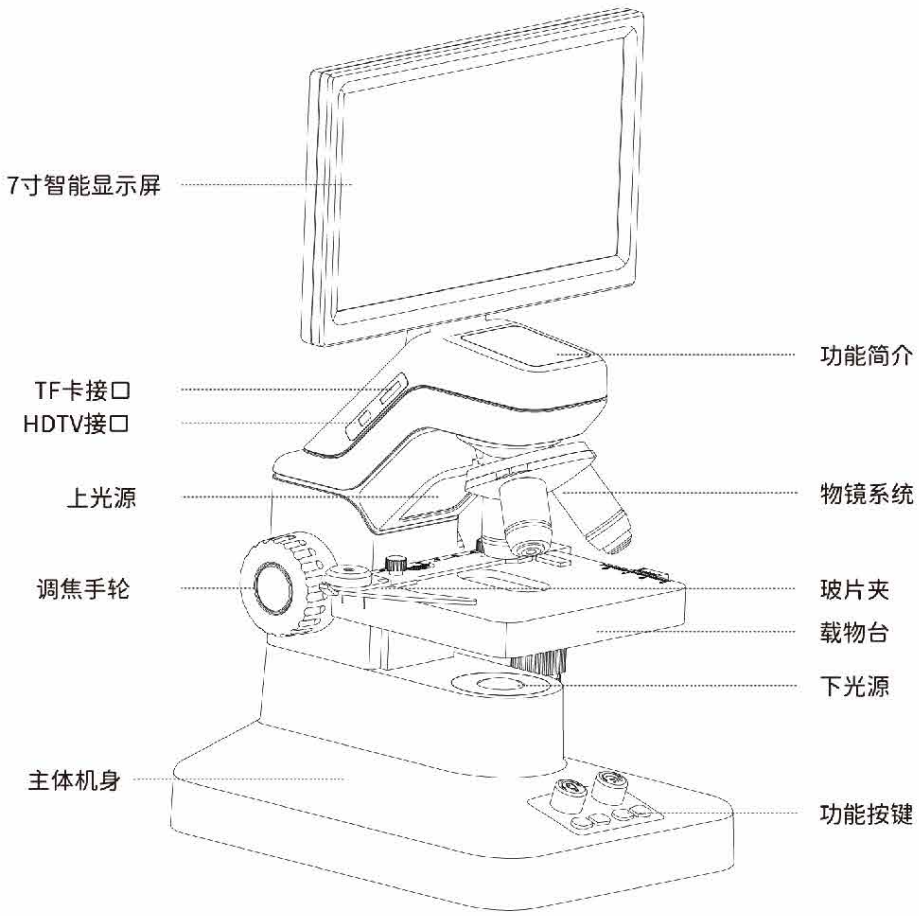

正面侧视图

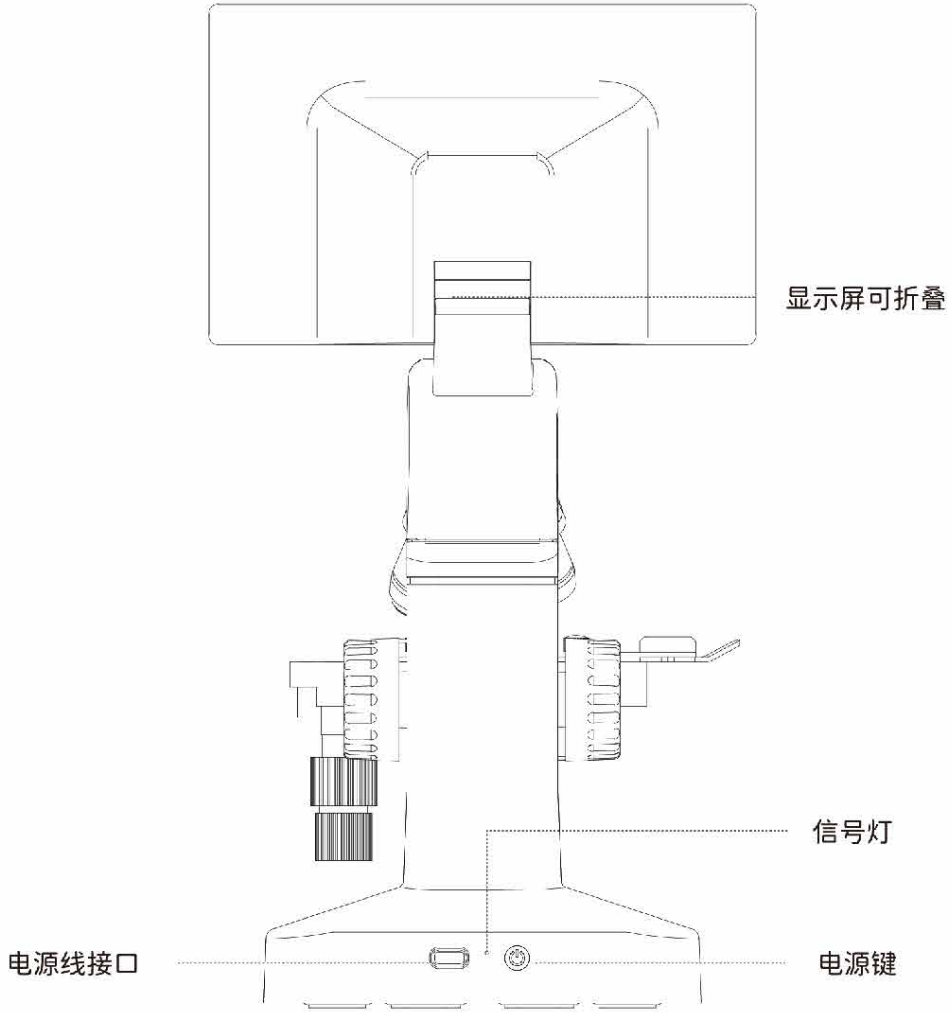

背视图

(图1)

2.1 安装电池

打开电池盖，安装电池（18650电池），然后盖上电池盖（如图1）。

(图2)

2.2 电源激活

每次安装电池后，必须先使用电源线对显微镜通电，激活电池管理电路（1-2秒即可）（如图2）。

(图3)

2.3 开关机

开机：短按显微镜后面开机按钮，指示灯亮起即可；

关机：长按开机按钮，等待2-3秒后，显微镜关机（如图3）。

(图4)

2.4 充电

电量指示：正常使用，充电状态下（如图4）。

(图5)

3.1 开机

按背面开关按钮，指示灯亮起即可（如图5）。

(图6)

3.2 载玻片的使用

拨开平台玻片夹，使载玻片中心对齐物镜，随后用玻片夹固定（如图6）。

(图7)

3.3 载物台的使用

手拧平台XY轴旋钮，将标本对准物镜中心。观看标本时，手拧玻片夹XY轴旋钮，可观看标本其他部位（如图7）。

(图8)

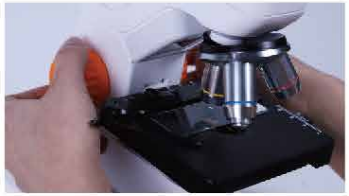
(图9)

3.4 物镜的使用及调焦

① 将高倍物镜转到中心（垂直方向）（如图8）；

② 然后移动标本，把切片细胞对准物镜中心（如图8）；

③然后在把低倍物镜（4X 物镜）转到中心，慢慢向上或者向下旋转调焦旋钮，直到图像清晰。在逐步切换到更高倍数的物镜观看，切换物镜后，要重新微调调焦旋钮到图像清晰（如图9）；

(图10)

4.1 光源调节

光源旋钮按压是上下光源切换，左右旋转是调节光源亮度（如图10）。

(图11)

4.2 按键操作说明

短按WIFI 图标按键，显示屏会显示按键的操作说明，再次短按退出操作说明页面（如图11）。

开启WIFI：长按2秒进入WIFI模式（如图11）。

(图12)

4.3 数码放大调节

旋转WIFI图标旋钮，调节图像数码放大或缩小（如图12）。

(图13)

4.4 拍照

按压拍照按键，切换到拍照模式，再次按压即可拍照（如图13）。

(图14)

4.5 录像

按压录像键切换到录像模式，再次按压开启录像（此时显示屏会亮起闪烁的红点），再次按压停止录像（如图14）。

(图15)

4.6 相册

按压相册按键，显示屏进入相册列表，观看照片或者视频。旋转WIFI图标旋钮，可以选择所需的图像文件，再次按压放大图像文件；按压相册键，退出相册（如图15）。

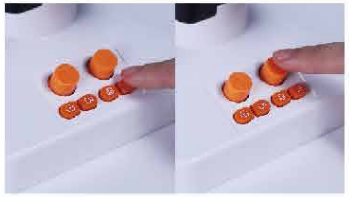

(图16)

4.7 菜单键

按压菜单按键，进入一级菜单页面，可旋转WIFI图标旋钮选择需要设置的参数以及语言，选择后，按压WIFI图标按键确认选择，再次按压菜单键退出（如图16）。

(图17)

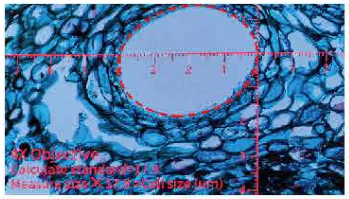

(图18)

4.8 测量

①按压菜单按键，进入一级菜单页面，通过旋转WIFI图标旋钮选择测量尺选项，根据不同的物镜，选择不同的标尺（如：现在4X物镜观看，就选择4X的标尺），然后在按压旋钮确认，最后按菜单键退出菜单页面；（如图17）。

②测量换算方式：（如图圆孔直径测量，从标尺看是40个小格，40*17.9（4X物镜）=716UM（微米），换算毫米等于0.716mm。）（如图18）

③计算公式：测量的小格数*基数=尺寸（微米）

4X物镜基数17.9；10X物镜基数7.37；40X物镜基数1.86；

五、WIFI功能操作说明 >>> CN

(图19)

5.1 开启WIFI

长按WIFI图标按钮(2秒)，进入WIFI模式，此时显微镜会发出WIFI信号，并显示ID地址和密码，ID(TN300_488XXXXXXXXX)密码(12345678)(如图19)。

(图20)

5.2 手机APP连接WIFI

APP上点击连接WIFI按钮，进入WIFI设置页面，选择对应显微镜WIFI信号名称(TN300_488XXXXXXXXX)的WIFI并连接，在返回APP主界面，等待“开始观察”文字显示(由于不同的手机，响应速度也不一样)(如图20)。

(图21)

5.3 开始观察

点击开始观察后，进入图像实时预览页面，可操控显微镜拍照，录像，数码放大缩小，色彩调整(如图21)。

(图22)

5.4 APP进入相册

①点击设备相册图标，进入设备相册；(如图22)。

②点击本地相册图标，进入本地相册；(如图22)。

注：设备相册指显微镜自带内存卡中的相册，本地相册为手机APP中的相册。

(图23)

5.5 显微镜控制APP

显微镜的按键操控也可控制APP拍照，录像，进入相册，色彩调整，进入菜单。(如图23)

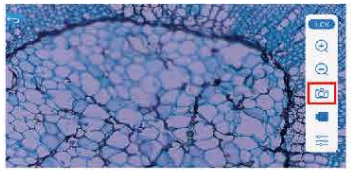

(图24)

5.6 其它说明

APP拍照和录像保存手机APP相册的同时，显微镜的内存卡也会同步保存图像和视频数据。(如图24)

六、显微镜连接电脑 >>> CN

(图25)

6.1 安装电脑软件

电脑安装StrangeView图像软件(如图25)。

(图26)

6.2 显微镜模式选择

显微镜TYPEC数据线，一端插入电脑USB，另一端插入显微镜TYPEC接口，此时显微镜会出现3个选项(存储器，摄像头，充电)，旋转WIFI图标旋钮，选择摄像头，然后按压WIFI旋钮确定。(如图26)。

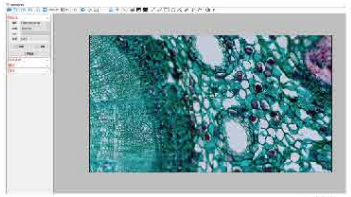

(图27)

6.3 电脑观看图像

连接电脑后，会有1-3秒自动安装驱动程序，然后打开图像软件StrangeView，即可电脑实时观看图像，以及编辑图像(如图27)。

七、显微镜连接电视 >>> CN

(图28)

7.1 视频数据线连接电视

视频数据线插入显微镜HDMI插孔，另一端插入电视端口，然后选择电视对应的输入信号源，电视即可观看（如图28）。

八、显微镜参数 >>> CN

产品名称	数码显微镜
产品颜色	白色
传感器	Optical Format 1/2.8"
	Pixel Size 2.9 μm x2.9 μm
	SENSOR resolution 1920(H)x 1080(V)
像素规格	200w
物镜	消色差 4X/10X/40X
屏幕尺寸	7寸高清IPS屏
显示屏分辨率	1024*600

九、注意事项 >>> CN

9.1 操 作

① 不应让部件直接暴露在阳光下，应放置在干燥、清洁的环境中，避免高温和剧烈震动。

② 显微镜是一种精密仪器，应小心轻放，在运输过程中避免冲击和碰撞。

③ 为了不影响成像的清晰度，避免污物或手指印留在镜片表面。

④ 不能同时用反方向转动左右变焦手轮，否则会发生故障。

9.2 维护和保养

① 所有的镜片都应保持清洁。若有细小灰尘，可用吹气球吹去或棉纱轻轻抹去；若有油迹和手指印，可用蘸有少量比例为3:7的乙醇乙醚混合液的棉纱轻轻抹去。

② 不能用有机溶剂去擦拭显微镜的其余表面，特别是塑料制品的表面，应用中性洗涤剂进行清洁。

③ 不应自行拆装显微镜，以免使显微镜性能受到影响。

④ 显微镜不使用时，应用防尘罩盖好，使之不与灰尘接触，并贮藏在隔绝湿气的地方，以免生锈或发霉。

⑤ 为保持显微镜的性能，建议进行定期检查（详情可与就近的代理商联系）。

10.1 安装电池无法开机
电池首次安装、电池被拆卸后再安装，需要通过插入显微镜电源线接口激活，才能启动电池供电。

10.2 显微镜开机后，自动关机
一般为电池电量不足，可观看显示屏右上角会有电池电量指示图标，或者显微镜背面有指示灯出现闪烁，提示电量不足(如图4)。

10.3 显示屏图像出现有黑角
一般是显微镜的物镜转换器没用转到位，物镜转到位后会有明显的定位阻力，物镜镜头需垂直于载物台。

10.4 显微镜看不到图像
一般是标本没有对准镜头中心，先将40X物镜转到下方，然后调节XY轴旋钮，将标本对准镜头中心，在上下缓慢调节焦距，直到图像清晰为止。

10.5 制作的标本观看图像偏黑、不清晰
这是因为制作的标本偏厚，底部光源的光线不能穿透标本。

10.6 无法观看植物树叶或者物体表面
这类型标本是属于光线不可穿透，要按压光源旋钮，切换上光源照射标本观看。

10.7 HDMI连接电视为什么没有图像
HDMI信号线连接电视或者其它带HDMI的显示设备，要注意设置显示设备的输入信号源。

10.8 显微镜通过USB连接电脑没有图像
显微镜通过USB连接电脑，显微镜的显示屏会出现菜单，需要选择连接模式，再按压WIFI图标旋钮。

FCC Caution:

This device complies with part 15 of the FCC Rules. Operation is subject to the following two conditions: (1) This device may not cause harmful interference, and (2) this device must accept any interference received, including interference that may cause undesired operation.

Any Changes or modifications not expressly approved by the party responsible for compliance could void the user's authority to operate the equipment.

Note: This equipment has been tested and found to comply with the limits for a Class B digital device, pursuant to part 15 of the FCC Rules. These limits are designed to provide reasonable protection against harmful interference in a residential installation. This equipment generates uses and can radiate radio frequency energy and, if not installed and used in accordance with the instructions, may cause harmful interference to radio communications. However, there is no guarantee that interference will not occur in a particular installation. If this equipment does cause harmful interference to radio or television reception, which can be determined by turning the equipment off and on, the user is encouraged to try to correct the interference by one or more of the following measures:

-Reorient or relocate the receiving antenna.

-Increase the separation between the equipment and receiver.

-Connect the equipment into an outlet on a circuit different from that to which the receiver is connected.

-Consult the dealer or an experienced radio/TV technician for help.

The device has been evaluated to meet general RF exposure requirement. The device can be used in portable exposure condition without restriction.