BRO_U Series Agriculture Drone

(Model:U60)

To User

Dear user, thank you for choosing BRO's products.

For safety purposes and better user experience, it is highly recommended that you read this manual carefully and strictly follow the instructions hereof.

Qingdao Zhongfei Intelligent Technology Co.,Ltd

BROUAV

www.bro-uav.com
www.brouav.com

1. Disclaimer

Warning

- **Please be sure to read this document carefully before use and familiarize yourself with the functions of the product before setting up, debugging and using it.**
- **If this product is not used correctly, it may cause serious injury to yourself or others, or result in product damage and property loss. China Flying Intelligence does not assume any responsibility and does not accept any form of return or exchange request.**
- **This product is not a toy and is not suitable for use by children and teenagers under the age of 18. Keep out of reach of children.**

1. This product is a multi-rotor unmanned aircraft designed for agricultural use by Qingdao Zhongfei Intelligent Technology Co., Ltd. Please carefully read the "Instructions for Use" to understand your legal rights, responsibilities, and safety instructions. Failure to do so may result in property damage, accidents, or personal hazards. By using this product, you acknowledge that you have fully read and accepted all terms and contents of this document.
2. Before using the product, ensure that you understand its characteristics and functions and possess the necessary technical capabilities to operate a plant protection drone. Our professional technical team can handle risks such as installation or debugging failures leading to takeoff issues or crashes.
3. During use, please note that this product uploads flight records and operation data to the BRO intelligent server. If any loss of data occurs due to user error preventing analysis of flight records or operation data, BRO bears no responsibility. For subjective difficulties in usage or overall machine performance not meeting expectations unrelated to product quality issues, BRO does not accept returns or exchanges.
4. Accidents may occur during product use due to improper operation or environmental factors beyond our control. We are aware of these risks and willingly assume all associated losses.China Aircraft Intelligent Technology is not liable for such accidents.
5.Please use, store, and maintain this product according to the guidelines in the "User Manual". Unauthorized disassembly, modification, or installation of the product is strictly prohibited. The product should only be used for its intended purpose and not for any other purposes. Any issues related to improper settings, operations, unauthorized modifications or installations, as well as product failures or crashes caused by third-party configurations will not be covered under warranty repair services. The user will bear all resulting economic and legal responsibilities.
6. In any case, the purchaser or user must comply with the relevant laws and regulations, instructions for use, and regulations of the country and region where the product is being used. Safety requirements must be followed to ensure that drones are flown within legal limits including flight altitude, designated areas for flying, visual distance during flights etc. China Aircraft Intelligence shall not be held liable for any violations of relevant laws and regulations committed by purchasers or users.
7. Within legally permitted boundaries,Qingdao Zhongfei Intelligent Technology Co.,Ltd reserves the final right to interpret and modify these terms mentioned above without prior notice.The User Manual，product descriptions，software，firmware,and other products may undergo updates,revisions or deletions through BRO's official website,social media platforms,Instructions for Use,e-commerce platforms,and other omni-channels at BRO's discretion.

2.Safety Instructions

Environment

- Fly in an open area away from crowds, without obstruction from tall buildings or objects.
- Do not fly over sea waves above 4.5km.
- Fly in an environment of 0℃ to 45℃ with good weather (not heavy rain, blowing, or extreme weather).
- When flying in a legal area, please consult the local flight management department before flying to comply with local laws and regulations.
- Make sure there is no electromagnetic interference from high-voltage lines, communication base stations or transmitting towers in and around the working area.
- Never fly indoors

Pre-flight checkout

- Ensure that each equipment is charged
- Ensure that genuine BRO parts are used and all parts are intact. If any parts are aged or damaged, please replace them before flying
- Ensure that the propeller is not damaged, deformation and installed firmly, the surface clean, and installed on the motor.
- Make sure the blade and arm are fully deployed and the arm buckle is fastened.
- Ensure that the motor is clean, installed, fastened and starts properly
- Ensure that the landing gear, work box and flight battery are fastened.
- Ensure that RTK antenna, GPS antenna, visual system, surface is clean without shielding.
- Ensure the spraying system is not blocked and functioning
- If the APP needs to calibrate the compass is, please calibrate before flying.
- When working, make sure that the GNSS satellite navigation signal in the operation area is good, otherwise the operation task will not be completed successfully.
- Before flight, please ensure that the communication environment in the flight area is good and stable, and the product should be used normally under the continuously stable RTK and 4G network environment.
- Flying hands and other personnel must wear helmets when working to keep a safe distance of more than 6 meters from the aircraft.
- Make sure to remove debris that may affect flying in the body of the operating environment, such as plastic bags, plastic film and other vulnerable objects

Operation

- Do not stay close to the propeller and motor at work to ensure a safe distance of more than 6 meters.
- Ensure that no third-party personnel can enter the operation area during the whole operation
- Be sure to fly without exceeding the maximum take-off weight of the drone to avoid danger
- Fly within the visual range
- **Please return home as soon as possible to prevent battery damage and equipment failure caused by excessive battery depth**
- If the operating environment does not meet the working conditions of the and the visual system, the aircraft will not automatically avoid obstacles when returning automatically. If the signal of the remote control is normal, the flight speed and altitude can be controlled by the remote control.
- Flying by breaking rods or otherwise stopping the motor will cause the vehicle to fall. Please use this function in an emergency.
- Do not make phone calls during flight and operate the vehicle under the influence of alcohol or drugs.
- After landing, turn off the aircraft and then turn off the remote control to avoid the remote control signal loss and cause the aircraft to automatically start the return mode.
- If there are high voltage power wires in the operation area, be sure to plan the route reasonably, keep a safe distance to avoid collision, and pay attention to electromagnetic interference
- Do not operate the disassembly module or plugging route when the product is in the power state.

Maintenance instructions

- At the end of each operation, the aircraft is restored to normal temperature. Do not clean immediately after the aircraft operation.
- After each operation, please wipe the remote control surface and the display screen with a clean wet cloth (prefer dry water)
- Every 20 hours or 100 ups and downs

a) Check the propeller without damage, if any, please replace the new propeller

b) Check whether the propeller is loose, and replace the blade and spacers

c) Check the atomization of the nozzle. If the atomization is not good, clean the nozzle thoroughly. Please replace the new nozzle.

Instructions for storage and transportation

- The product should be far away from heat source to avoid damage to electronic accessories or other parts of the product, or cause fire and other hazards.
- If the drone is idle, or needs long-term storage or long-distance transportation, it is necessary to remove the medicine box from the drone and empty the medicine box.
- . The storage battery, UAV, remote control, charger and other equipment shall be stored in a dry environment with a temperature of 10°C-30°C. Do not store the equipment in a leaky and wet place.
- **When the uav is idle, the battery should be removed and stored separately, and the battery should be stored at 50%~60%. The storage environment should be kept dry, ventilated and tidy.**

Attention

! The product can only be used after completing the required UAV operation training and obtaining a valid operator certificate in accordance with local laws and regulations. Failure to meet these requirements prohibits the use of this product for any operations.

! Do not fly alone for beginners. It is recommended to obtain guidance and assistance from an experienced UAV pilot before flight, and be accompanied by an experienced UAV pilot during flight.

3. List of items

The list of items includes the UAV body, sprayer, spreader (optional), remote controller and purchased spare parts, etc. When opening the package, please check all materials against the order. If it is missing, please contact your seller within 7 days.

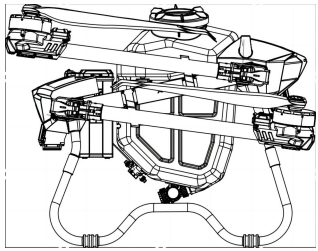

UAV body*1
Sprayer*1

Toolkit * 1

Remote control component

Remote control * 1

Charging adapter * 1

The Type-C data line * 1

Sowing the system components(Optional Parts)

Spreader* 1

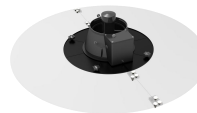

Spreader * 1

4. Product introduction

Overview

The U series agricultural UAV whole system scheme is a comprehensive configuration provided by BRO, featuring two load models of 35kg and 55kg respectively. It incorporates a novel truss body structure and Z-shaped folding arm, along with bilateral large flow impeller pump, water-cooled centrifugal nozzle, ultrasonic flow meter, sensors, integrated medicine cabinet components, and a customized system. The entire machine boasts an IP67 waterproof design from the inside out, including sealed power board, waterproof plug seals, core module sealing design as well as overall immersion capability. This grade of waterproofing enables it to confidently handle various challenging working environments.

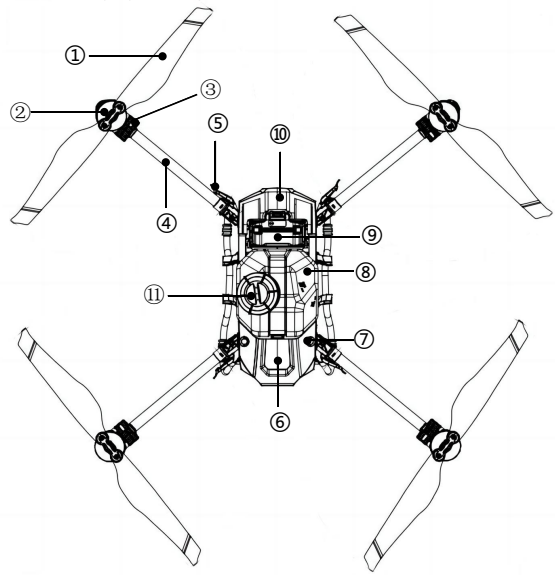

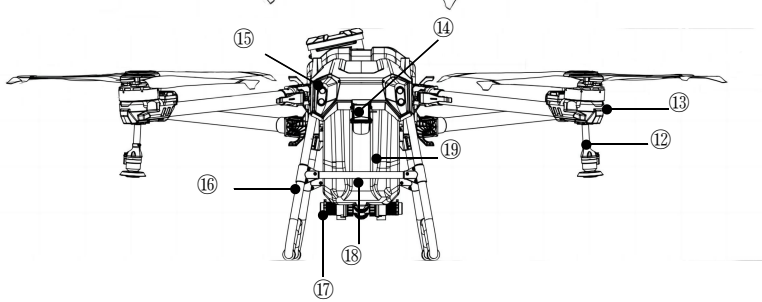

① Propeller
② Motor
③ ESC
④ Arm
⑤ Lock of Arms
⑥ Front Shell
⑦RTK Antenna
⑧ Sprayer Tank
⑨ Battery Warehouse
⑩ Rear Shell
⑪ Cap of Sprayer
⑫ Centrifugal Nozzle
⑬ LED Lamp
⑭ Gimbal Camera
⑮ Light Lamp
⑯ Landing Gear
⑰ Impeller Pump
⑱ Flowmeter
⑲ Perfusion tube

Remote Controller

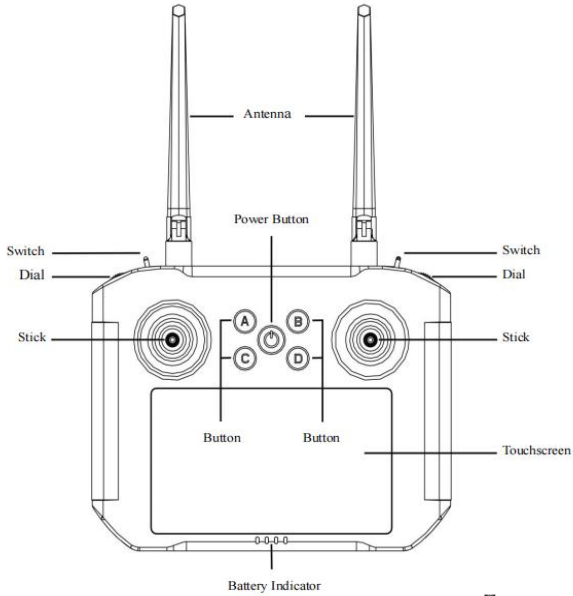

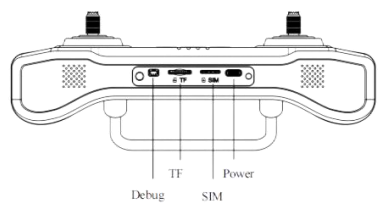

Users can remotely complete the task through the dial wheel and button on the remote control.

1. Left dial wheel: Its function can be defined, allowing users to set their desired functions.
2. Left lever: By turning the switch, users can switch between different flight modes of the control aircraft (attitude mode, manual mode, operation mode).
3. Right lever: In AB operation mode, users can use the key to set points A and B; in attitude mode, by moving it up and down three times, AB points will be cleared.
4. Right dial wheel: Its function is yet to be defined and can be customized according to user preferences.
5. Key: Pressing this key controls the night vision lights of the aircraft.
6. Key: Pressing this key turns on or off the water pump
7. Return key: Pressing this key activates or deactivates the centrifugal nozzle system.
8. Power key: This key is used for activating and powering on/off of the remote control device
9. Sliding key: Its function is yet to be defined and customizable based on user requirements.

5. Pre-flight Preparation

5.1 Prepare Airframe

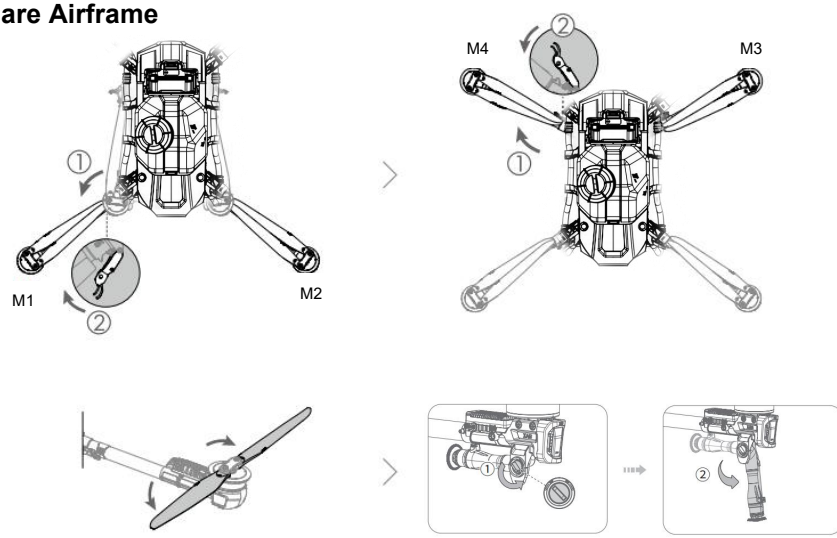

① Unlock the M1 and M2 arms and lock the arm retaining buckle

② Unlock the M3 and M4 arms and lock the arm fixing ports

③ The propeller of the four arms is spread out outward in turn. After unfolding the propeller, the propeller type of the corresponding arm should be checked (the screw can be seen between the propeller clip and the blade Oar model), C C W propeller counterclockwise rotation corresponds to M 1 and M 3 arms, CW propeller clockwise rotation corresponds to M2 and M 4 arms.

④ Turn and loosen the spray rod knob counterclockwise, expand the spray rod outward, and then tighten the spray rod knob clockwise.

Warning

- Check whether the parts are intact, whether the tripod is deformed, whether the internal flight control is loose, and whether there are cracks at the flow meter interface.
- Check the identification on the power motor and blade if the installation sequence is correct (CCW-M 1 / M 3, CW-M 2 / M 4).
- Do not switch CW propeller and CCW propeller. Wrong installation of propeller model will lead to flight accidents.
- Check that all pins are skewed and that the harness is properly fastened.
- Check whether the arm is locked, the hood is tight, and the nozzle is firmly installed

5.2 Prepare smart battery

Charging

Use a mobile generator or charger to charge the battery. After the battery is fully charged, the mobile generator or charger automatically stops charging and the battery will automatically shut down.

On / Off

- On

Battery unprotected state, short press lengthen press boot.

- Off

Method ①: It is suggested that after the plane lands normally, the battery should be pressed on the plane. After all the water lights are turned off, the battery is forced to shut down, then

Remove the battery.

Method ②: After the plane lands normally, the battery will directly unplug the battery. The battery has no communication and no load, and will automatically shut down for 20 minutes.

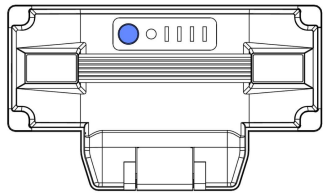

Install

Plug-in and pull the battery can be directly installed, put the battery into the battery compartment, the fixed card buckle card tight, hear the "click" sound means that the battery has been installed in place

Warning

- Before installing the battery, keep the UAV power interface and battery interface clean, dry and free of metal foreign matter and liquid residue.
- Before starting the battery, make sure that the battery is fully inserted into the battery compartment to avoid flight accidents when the battery does not fully contact with the power interface of the UAV.
- It is strictly prohibited to remove the cell. The replacement cell shall be completed by the cell supplier or equipment supplier, and users shall not replace it by themselves.
- It is forbidden to use damaged cells, which may be damaged due to impact and other reasons during transportation. If the cell is found to have any abnormal characteristics, such as plastic edge damage, shell damage, electrolyte gas, electrolyte leakage, etc., the cell shall not be used. Batteries with electrolyte leakage or electrolyte odor should be kept away from fire sources to avoid fire.
- The recommended storage voltage is 64.8V~68.8V. The storage temperature must be in the range of-10℃ to 30℃.

5.3 Prepare remote control

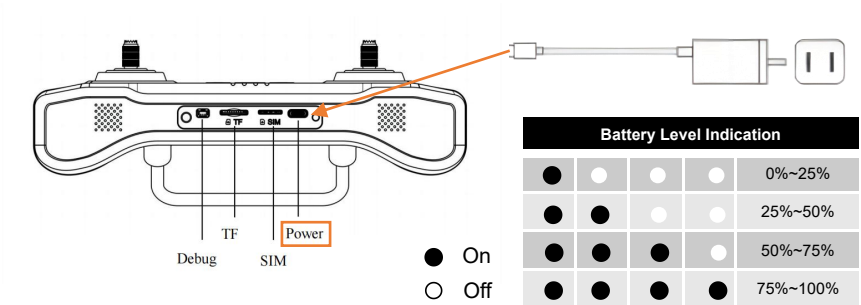

- **Charging**

Please use the factory delivered power adapter and cable to charge the remote controller.
（1）Connect the power cable to the type-c port of remote controller;
（2）The power indicator and battery level indicator will be flashing during charging;
（3）All the 4 lights of battery level indicator will be solid on when charging is completed.

- **Open the antennas**

（1）Keep the antennas vertical to the ground;
（2）Keep the antennas in parallel, do not cross or overlap with each other.

Warning

- Different antenna positions receive different signal strengths, so the user can adjust the antenna orientation appropriately to obtain the best signal during the remote control flight.
- In order to ensure signal stability and flight safety, it is recommended that the distance between the remote control and the aircraft should not exceed 1000 meters

- **Power On/Off**

It will be solid on in red after RC is powered on

- Power on

Press the power button to start the power system, then press-and-hold the power button till it beeps.

- Power off

Press-and-hold the power button till the “Power off” popped up on screen, tap on it to power off the remote controller. Press-and-hold the button combination of Power and C for 15 seconds, remote controller will be shut down forcibly.

- Sleep

Press the power button to get the screen into sleep when the remote controller is powered on, and
invoke by it also.

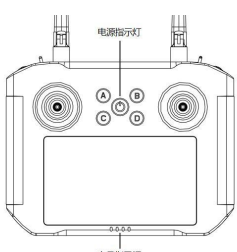

5.4 Prepare spraying tank and pesticide

Unscrew the cap counterclockwise, fill the tank up and then tighten the cap clockwise.

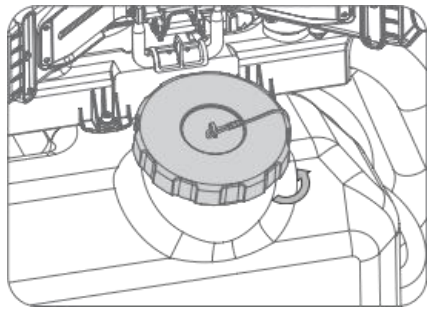

Protective Measures for Pesticide Preparation

Safety is paramount in preparing pesticides, so please strictly follow the guidelines below.

① Check if your long sleeves, trousers, mask, goggles and rubber gloves are worn out. Replace them when they do.

② Wear a mask, goggles, long sleeves, trousers and rubber gloves before preparing pesticides upwind in an airy and shady area.

③ NEVER smoke, eat or drink when spraying pesticides. When tubes or nozzles are clogged up, unclog them with soft objects or clean water. Do NOT blow them with your mouth.

④ If pesticides get into your eyes, rinse them immediately with plenty of clean water. When you have symptoms such as headaches, nausea and vomiting, stop the operation, take off your protective clothing and go to the nearest hospital with the packaging of the pesticides applied.

⑤ Upon completion of the operation, wash your hands with soap and remember to wash your body thoroughly in time.

⑥ Soak your protective equipment in lye and wash it.

⑦ Pesticide containers and packaging must be collected for proper disposal. NEVER discard pesticide packaging in ditches, wells or places with people and animals, otherwise, pesticide hazards, poison- ing or environmental pollution could occur.

Pesticide Preparation Precautions

- Use pesticides in accordance with manufacturers'safety instructions.
- During operation, the protection of aircraft besides people is also important. Beware of liquid getting into the circuit board in the installation or removal of the liquid tank, causing short circuits and dam- aging the aircraft. Minimize malfunctions resulting from improper operation.
- Prepare pesticides with clean water as dirty or muddy water could reduce the dispersity, wettability and permeability of pesticides in water, causing them to precipitate and become less effective. Impuri- ties in water could breakdown part of the active ingredients in pesticides, reducing their effectiveness.
- After adding clean water, stir the solution thoroughly so that pesticides fully dissolve with fewer pre- cipitates and thus become more effective. Do NOT use warm water in pesticide preparation as the solution could crystallize and precipitate as the water cools down.

Pesticide Poisoning Symptoms and Emergency

Symptoms of Poisoning: dizziness, headaches, nausea, vomiting, excessive sweating, chest tightness, blurred vision, weakness, shortness of breath, increased heart rate, or even incontinence, constricted pupils, etc.

Emergency Response: In case of swallowed poison, do NOT induce vomiting. Send the victim to the hospital immediately with the product label. Specific treatment is required, as special antidotes may not be available.

6 APP User Guide

6.1 Account Registration and Activation

- **Registration**

Open BRO Agriculture APP, tap Accounts. Fill in the information as required(Choose phone number or email for registration). If an account exists, input the password to log in, it will be automatically activated.

NOTED: For the manufacturer account, please apply to BRO sales team.

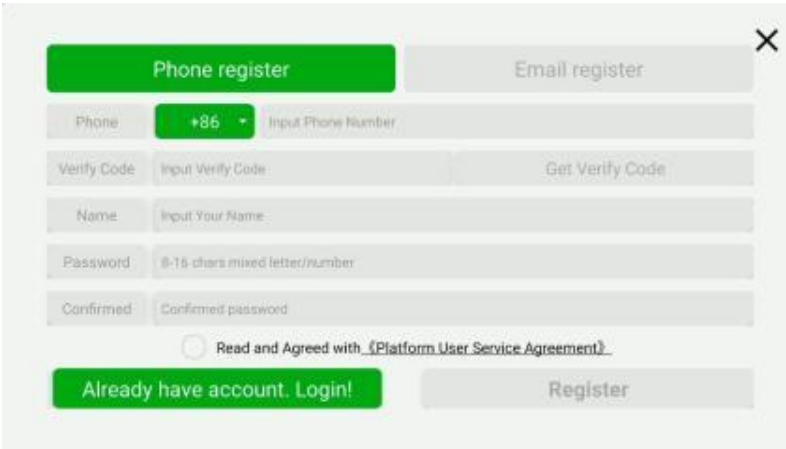

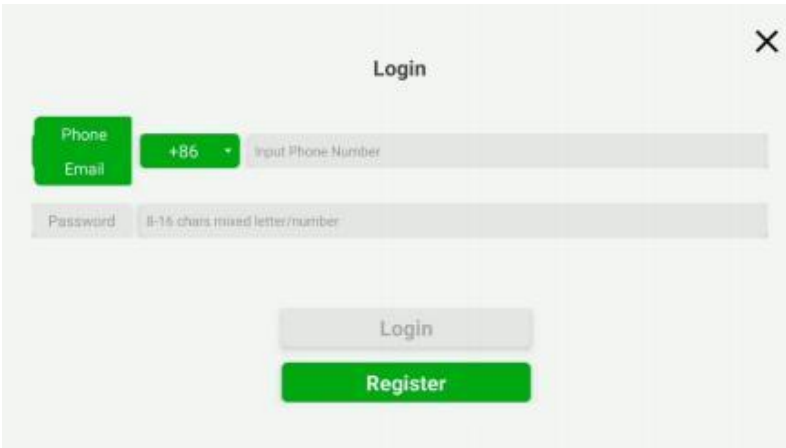

- **Activation**

Power up the drone and turn on the remote controller.

6.2 APP Main Interface

①Accounts: Click to manage the Flight record/Team Management/Log Management/Common setting and Account and security.

② Device Managment: Controller/Aircraft/Battery/RTK Locator/Seeder/Ground Station

③ Work : Block Managenment. View and edit the history Block.

④ Start: Click to enter the interface of the working interface.

⑤ Connection Status: Display the connection status between the aircraft and the remote controller.

6.2 APP Working Interface Introduction

①Back to Homepage：Tap to return the homepage.

②Device Connection/Flight Mode：Display the drone status.

Tap to check alarms ： If there is a alarm, tap to view the detail information and solve it accordingly before flying.

③Flight Time：The time of each flight is recorded and recalculated when landing.

④Signal：Communication status between the remote controller and the drone.

⑤Battery Level：Display the battery level (smart batteries show battery percentage, others show battery voltage).

⑥GPS/RTK Connection：Display the positioning mode .

⑦Operation Mode：Manual mode, AB mode and Auto mode are optional .

⑧Spray/Spread：Automatically identify operating modes

⑨Setting：Set the parameters of drone and remote controller.

⑩Eraser：Clear the flight trace

⑪Location：Locate the real-time positions of the remote controller and the drone.

⑫Add：Add the new block .

⑬Edit：Plan flight routes of the block

⑭Edit Param：Set operating parameters.

⑮Start Work：Tap to start work.

⑯Flight and operations real-time data

Speed：Drone real-time flight speed.

Dist：The real-time horizontal distance between the drone and the home point.

Drug（Spray）：Display the weight of pesticide sprayed during spraying.

Valve Size（Spread）：Display the real-time opening of the spreader valve during spreading.

Flow（Spray ）：Display real-time spraying flow.

Turntable Speed（Spread）：Display real-time spreader turntable speed.

Weight：Display the remaining weight in the spraying tank/spreading tank.

⑰Images：Show the real-time camera view, can be switched to full-screen display.

⑱Block Parameters /Route Parameters/Working Parameters ：Tap to expand the list.

6.2 APP Setting Interface

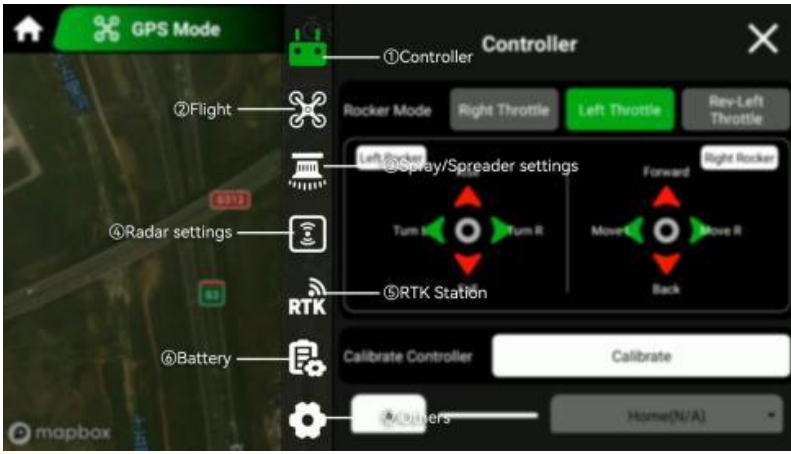

①Controller：Choose rocker mode, calibrate controller , set channels .

②Flight：Include flight route parameters, Sensor Calibration, Arm Sensor、Smart Drug Breakpoint、Flight Safety Limit and Flight Simulator。

③Spray/Spread Settings：Spray/spread system related settings, including switch, datas and calibration.

④RTK Settings: Include RTK Network ,Station Custom and Status

⑤Battery Settings：Include Low power action, Aarm threshold value, and battery informations.

⑥Others：Include Map Follow, Voice, Advanced settings.

3. Flight Debugging

Noted:* The drone has completed the necessary parameter settings before delivery, users only need to do simple steps as below.

3.1. Remote Controller Debugging

Step1:On the Homepage, tap **Start—Setting** (Top right corner) enter **Controller**, choose the **Rocker Mode** discretionarily as **Right Throttle/Left Throttle/Rev-Left Throttle .**

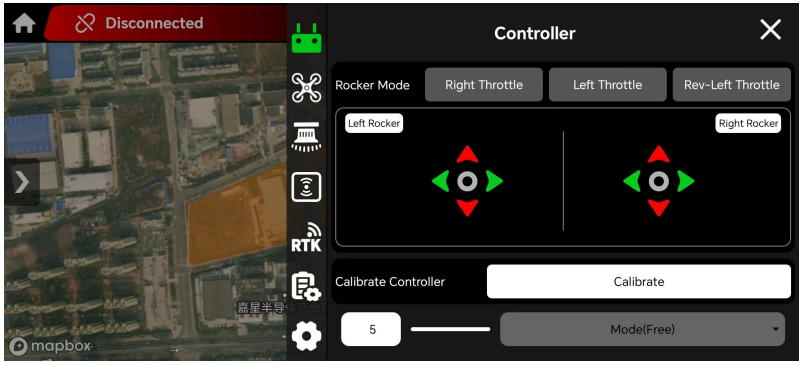

Right Thorottle
(Japanese Mode)

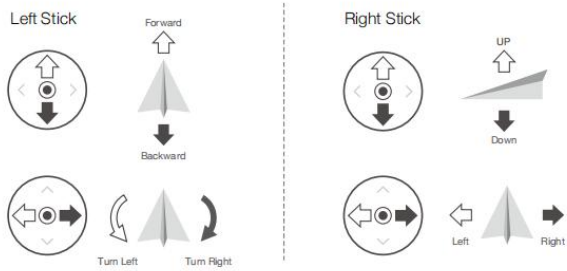

Left Thorottle
(American Mode)

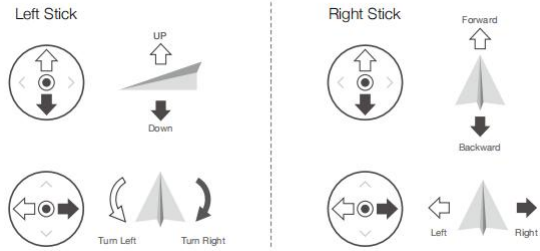

Rev-left Thorottle
(Chinese Mode)

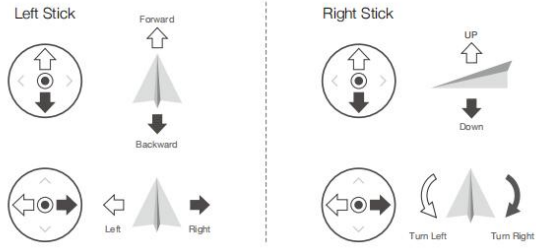

Step2：Calibrate drone magnetic sensor.

Tap **Flight—Sensor Calibration—Magnetic Calibration.**Calibrate the drone according to the prompts until completed and Confirm . Then please power off the drone and restart again.

According to the operating environment and requirements, set the corresponding flight parameters

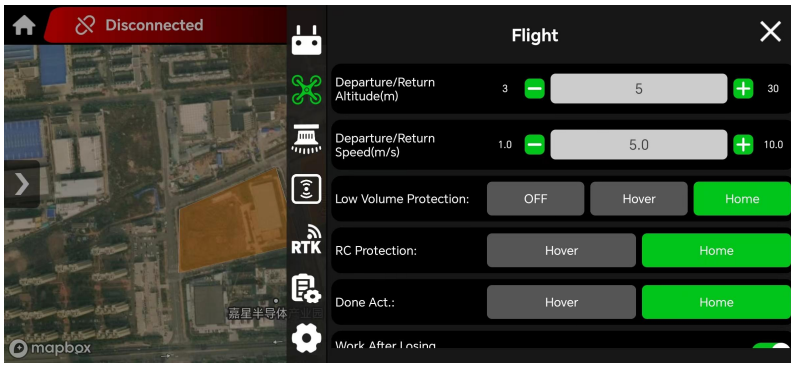

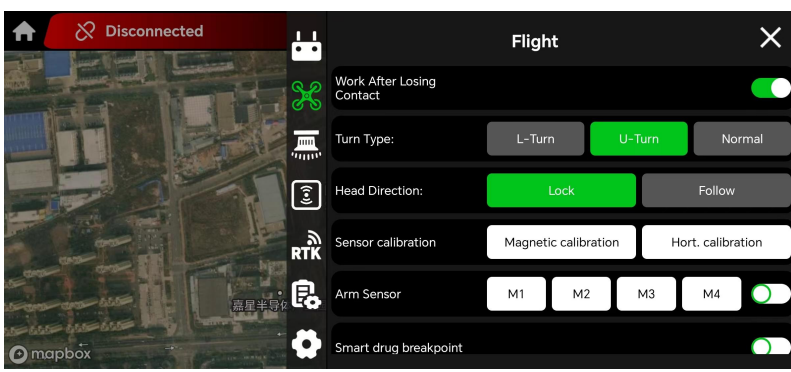

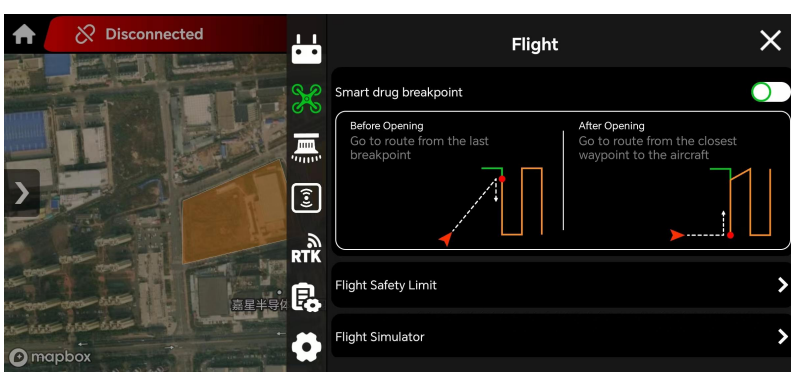

Step3: Tab to set spray parameters. Make sure the Spraying System is on. Please select **Double Nozzle** or **Four Nozzle** according to real situation. The **Four Nozzle** mode can be set to **Auto Double Open** or **All Open.**

For first time use, Tab to check **K** value in **Weight Calibration** and ensure it's correct, then start **Zero Calibrate.**

K Calibrate: Take out the tank, and tap **K Calibrate**. Check whether the K values of the 3 weighing modules are same as the values are displayed. If there is an error, please refill it.

Zero Calibrate: Tap **Zero Calibrate**, and make sure the drone is placed on the flat ground, empty the tank, and make sure the inside and outside are clean and no attachments. Tap **Calibrate**, then wait for the remote controller to display that calibration is complete. If it fails, please recalibrate .

.

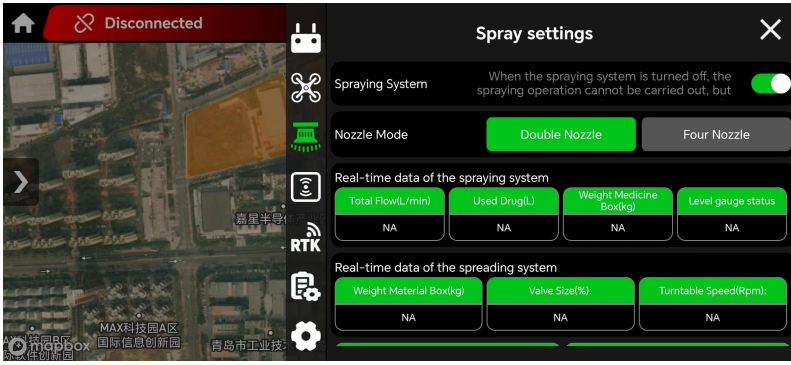

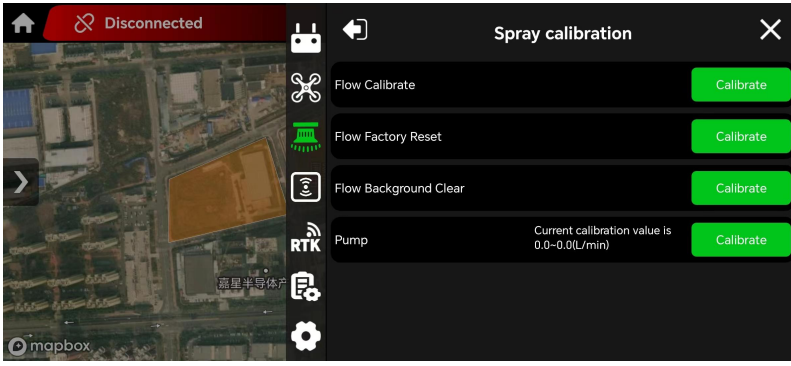

Step4: Tap to check battery informations. The recommended **Low power alarm** threshold value is **30%**, and **Low power action** set as **Alarm**. Recommend **Severe low power** threshold value **20%**, and the **Severe low power action** is **Home**.

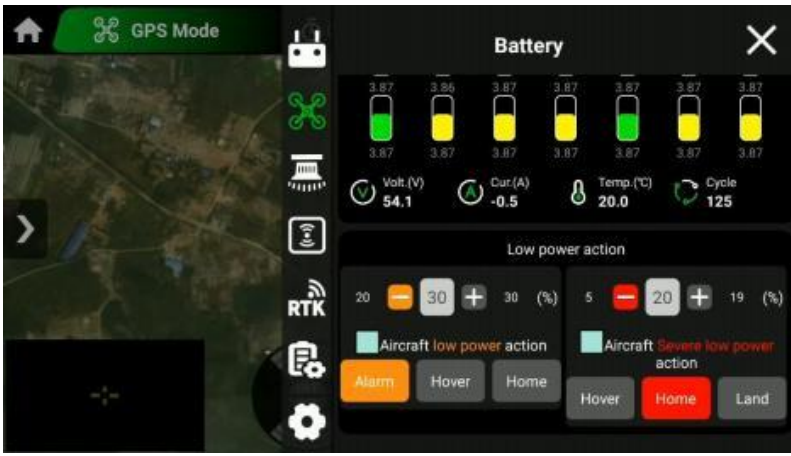

Step5: Tap to set others , it is recommended to open **Map Follow** and **Voice**.

Device Check: Tap the Check button of **M1, M2, M3, M4** one by one to check whether the M1 and M3 propellers rotate counterclockwise, and whether the M2 and M4 propellers rotate clockwise.

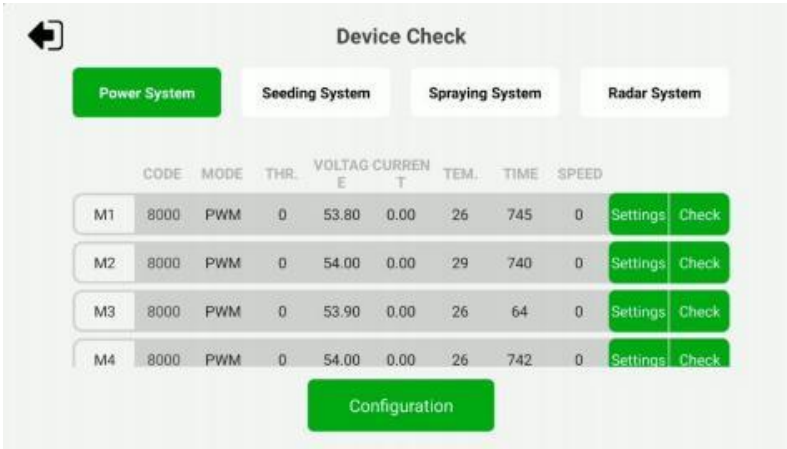

After the drone is assembled and debugged, it can add block and edit flight route to start wok.

*First time flight under **Auto Mode**, if the remote controller reports that spraying is abnormal and the drone stays hovering. Please follow the "**Flow Meter and Water Pump Calibration Tutorial**" to calibrate the water pump accordingly.

Operation mode guidance

4.1 Auto Mode

4.1 Add New Block

Enter the working page, make sure the top right corner is **Auto Mode**. Then tap **Add** to plan a new block . Tap **Mark(Map)** to choose **Mark(Drone), Mark(Map) or Mark(RC).**

Mark(Map)： **Suitable for terrain with regular plots and clear display on the map** . Find the specified plot on the map, move the cursor to the boundary of the plot, tap **Dot** to set the **Edge** Point in turn to complete plot mapping . The edge points could be **Reset/Deleted/Moved**. Then tap **Save Block**, fill in the relevant information as required to save it.

Mark(Drone) : Suitable for terrain with regular plots but not clear on the map.
After tapping **Mark(Drone)** , fly the drone to the desired plot edge, mark points around the plot, and tap **Save Block.**

Mark(RC) : Suitable for irregular plots and unclear boundaries on the map.
After tapping **Mark(RC),** walk to the edge of the plot with the remote controller, mark points around the plot, and **Save Block.**

4.2 Route Parameters

After saving the block , the block list will pop up and the just mapped block will be selected automatically, rename, split and delete are allowed

Tap **Edit** to re-edit this block, the operations are the same as before.

Tap **Edit Param**, the flight route will be created automatically, then set the relevant parameters and **Save** it .

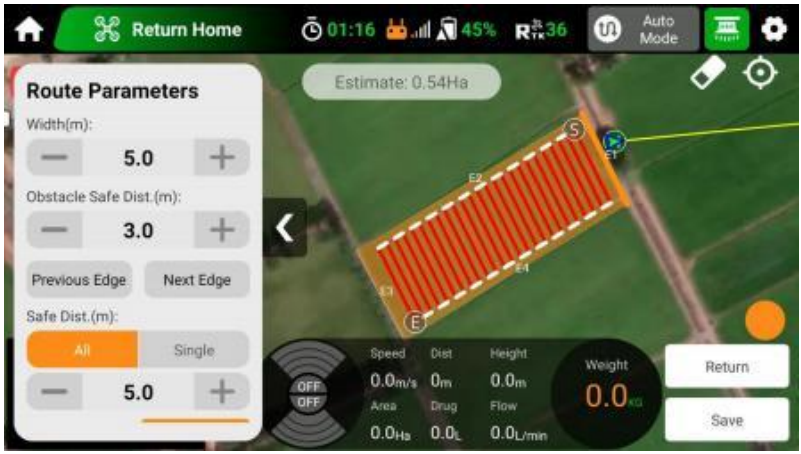

4.3 Work Parameters

After saving the route parameters, the **Work Parameters** list will pop up automatically

4.4 Start Work

After setting the work parameters, tap **Upload Route**, then confirm the flight informations, **slide the indicator bar**, and the aircraft will automatically operate according to the settings.

5 . AB Mode

Enter **BRO APP** ,tap **Start** and switch **Auto Mode** to **AB mode** . This mode is suitable for large areas with few obstacles and regular plots.

5.1 AB Point Parameters Setting

Step1: After setting the work parameters of AB Mode , it's recommended to save it as a template for next time.

Step2: Manually **fly the drone to the start point** (make sure the spray tank is filled).and Tap **A** to set point A on the app or the custom key on the remote controller. If the plot is a triangle or trapezoid, adjust the angles of points A and B after recording them.

Step3: **Fly the drone to point B** and the water pump will open automatically . Tap **B** or a custom key on the remote controlle to set point B.

5.2 Creating AB Route

After successfully recording points A and B, the APP will automatically create the route. Click ← → to switch the direction of routes

5.3 Start Work

Tap **Work** after confirming the route, then slide indicator bar to take off and it will work automatically .

4.3 Manual Mode

Enter BPO APP ,tap Start and switch to Manual Mode, this mode is suitable for irregular orsmall farmland.

Manual Mode Operational Process

Step1：Tap on the APP , then set the relevant Work parameters.

Step2：Fly the drone to the target area for pesticide spraying, then press the spraying button **(B or D)** on the remote controller to start manual spraying.

Management

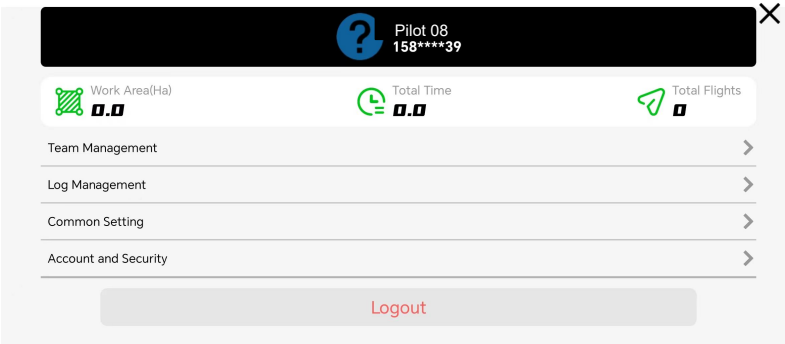

Team Management

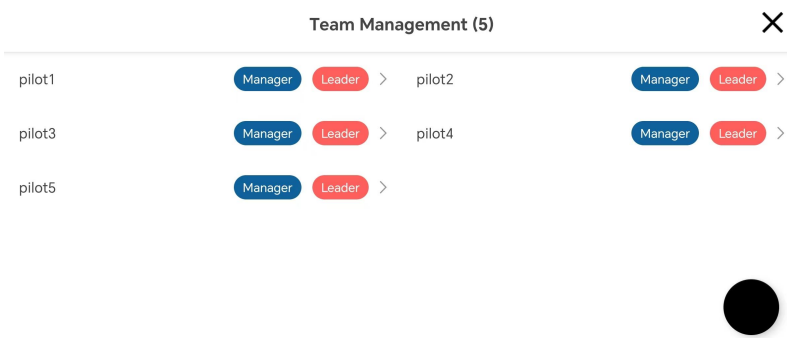

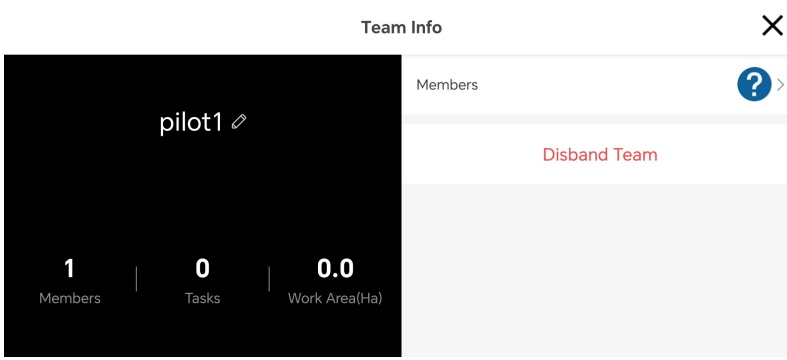

Log Management

When met flight failure , please download the relevant logs as needed and share them with BRO customer service for log analysis.

Tap **Accounts** on the Homepage, slide down to find **APP Log**, where the **FCU Log, APP Log, APP Crash Log** are saved.

* When reading logs, make sure the drone is stayed on an open ground with propellers locked to avoid accidents.

Device

Tap Device on the Homepage to view Controller, Aircraft, Battery, RTK Locator, Seeder, Ground Station . SN number, Activation time and APP Version （Unconnected devices appear gray and unclickable ） . If the devices have new version. the Upgrade button will change to green. The users can upgrade latest version accordingly.

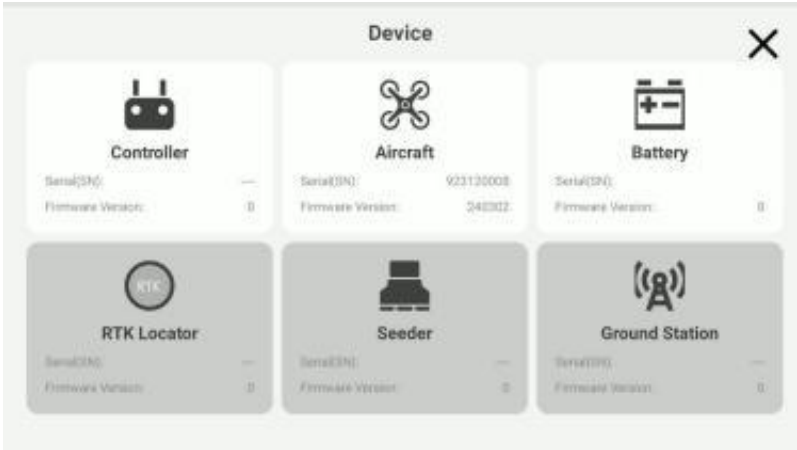

* When replacing the receiver or remote controller, or if remote controller fail to connect drone for over 2 minutes, Please follow the steps to reconnect : Tap Device-Controller-Pairing, then press the Link button on the receiver until the signal light flashes rapidly. When the signal light flashes slowly and the remote controller will display Pairing Successfully , the pairing is complete.

Maintenance

Cleaning after work

The chemical liquid is corrosive and will corrode the equipment and shorten its service life. It is recommended to clean the equipment in time after each operation.

The specific cleaning steps are as follows:

Cleaning agent: soapy water or laundry detergent

① Fill the medicine box with soapy water or washing powder water, start spraying manually, and clean the residual pesticides in the spraying system.

② Replace the water in the medicine box, turn on the spray manually, and clean the residual soap water or washing powder water in the spray system until the water in the water pipe is completely gone.

Drain it thoroughly to prevent residual liquid from flowing out and causing damage to other items during transportation or storage.

③ After wringing out the wet rag, wipe the surface of the drone to remove the medicine stains and attached soil.

If you are transitioning or not using the drone for a long time, you need to

Empty the medicine box and drain the liquid from the water pipes.

Regular maintenance

During daily use, equipment will wear out or malfunction. Regular maintenance can ensure that the equipment is put into agricultural operations in the best condition, reducing failures and improving efficiency. Specific maintenance steps are as follows:

body structure

① Check whether all screws on the machine body are loose or missing.

② Check whether the tripod, body, arm, motor, antenna and other components are firmly installed.

③ Check whether the connecting plugs of each component are firm, whether there is oxidation, and whether the battery interface is deformed.

④ Check the fuselage and various components for damage and cracks. Check whether there is deformation or cracks in the side beam cross-beam structure, whether the fasteners connecting the machine arm and the motor are firm, whether there is deformation in the machine arm, and whether the arm locking handle is normal.

⑤ Carry out all-round cleaning of the equipment on a regular basis, including cleaning hard-to-reach places after daily operations. The medicine box interface and battery interface of the fuselage must be cleaned in time.

Power system

(1) Propeller

① Visually inspect the propeller clamp for cracks and deformation, and the propeller blades for looseness, damage, deformation, softening, etc.

② Check whether the tightness of the fit between the propeller blade and propeller clamp is appropriate.

③ Check whether the fixing screws between the propeller clamp and the motor are missing or loose.

④ Use a wet rag to clean the attachments on the blades.

(2) Motor

① Remove the propeller and clean the motor with an air gun.

② Rotate the motor and check whether there is any shaking or abnormal noise in the motor bearings.

③ Visually check whether the motor enameled wire is damaged or broken.

④ Check whether the motor and motor base are firmly installed by shaking the motor.

⑤ Check the plug circuit between the motor and the ESC.

(3) ESC

① Disassemble the ESC power plug and check whether the metal part of the plug is deformed or oxidized.

② Check whether the ESC fixing screws are missing or loose.

③ Check whether there are pesticides and other attachments on the heat dissipation part of the ESC.

Spraying system

Spraying calibration is required when the error of the spraying system is too large (plus or minus error exceeds 5%) due to corrosion of the chemical solution, thicker chemical solution, replacement of impeller pump parts, or replacement of new impeller pump pipes. Use clean water or chemical solution for calibration (use chemical solution during operation). If the health index remains after calibration,

If abnormal, check whether the impeller pump pipe or spray pipe is normal. If it is found to be dry, lose elasticity or deformed, it needs to be replaced.

(1) Impeller pump

① Disassemble the impeller pump and check the wear between the impeller and the casing. If the wear is serious, replace it in time.

② Check whether the plug of the water pump connection cable is loose or oxidized.

(2) Smart medicine box

① Check the sealing condition of the medicine box mouth seal.

② Unscrew the lid of the medicine box, clean the dirt on the filter of the medicine box and check whether the internal medicine tube is normal.

- **Electric power system**

1) Battery

① When not in use for a long time, the battery should be recharged and discharged every 3 months to keep the battery active.

② When the battery bulge, leakage, deformation, or appearance damage is found, stop using it immediately.

③ Do not charge the battery in wet conditions.

④ Do not plug and unplug the battery when the battery is started up to avoid damaging the power interface.

(2) Power supply socket

During the use of the power socket, the power socket adheres to dust, liquid or other foreign body in the battery, charger or socket, short circuit or other spark (ignition) phenomenon. Users should use the battery socket, socket and so on before and after the daily use of the power equipment

The components are systematically checked and cleaned to ensure that the power socket remains clean, clean, dry and free of foreign matter.

(3) Mobile overcharging station

① engine oil

Check the oil level: check the oil volume before each use, and the oil level should be between the highest and lowest level line of the oil ruler

Replacement: replace until 20 hours after the first use, and every 50 hours after the first replacement

② empty filter

Check: Check the condition of the empty filter element and the oil quantity of the oil bath box before each use

Cleaning: clean up every 50 hours, and shorten the seriously dusty areas to clean up every 20 hours

③ Spark plug replacement Replacement every 500 hours

④ Valve clearance readjustment is required every 500 hours and professional operation by after-sales service personnel

⑤ Clean the fuel tank and filter screen. Clean the fuel tank and filter screen every 2 years

⑥ Oil pipe replacement for aging or cracking

- Delivery Management

When transporting the UAV, the blades of the UAV need to be folded and fixed with a paddle card. At the same time, use the safety belt to fix the body, and ensure that the UAV is in a fixed state during the transportation process.

- For long-distance transportation, the spray rod of the UAV should be removed before transportation.
- Before transporting the UAV, the spraying system needs to be cleaned and emptied, and all the water in the drug pipe needs to be emptied for transportation. Avoid the residual water from causing damage to other equipment during transportation.
- The waste pesticide packaging and clean sewage centralized recycling, reasonable treatment, do not discard and discharge at will, so as not to produce drug harm, pollution of the environment.
- Do not transport batteries on drones.
- When transporting the equipment, do not fatigue driving. At the same time, store the equipment separately to maintain air circulation to avoid poisoning caused by pesticide inhalation.

Aircraft（Model:U60)	
Dimensions	3075 mm×3050mm×860mm (with arms and blades unfolded) 1100mm×850mm×860mm (with arms folded)
Total weight	36 kg(without batteries) 49.5 kg(with batteries)
Flight Parameters	
Maximum take-off weight	106 kg (near sea level)
Hovering endurance	18min (@30,000 mAh & takeoff weight of 51 kg) 8min(fully loaded)
Maximum operating flight speed	13m/s
Maximum level speed	10m/s
Maximum tolerable wind speed	8 m/s
Maximum flight altitude	30m
Recommended operating ambient temperature	0℃ to 45℃
Spray tank	
Spray tank volume	55L at full load
Tank size	450*450**750mm
Nozzle	
Quantity	2 nozzles standard (4 nozzles optional)
Spray Width	8-12m (Depending on operating height and consumption per ha)
Atomizing Size	50~500μm (According to operation requirements)
Water pump	
Model	Dual water-cooling centrifugal nozzles
Quantity	2
Voltage	DC 68.4V
Max. Flow Rate	12L/Min*2pcs
Hourly work efficiency	20 hectares
Spreading system	
Payload	80L
Solid tank size	450*450*800mm
Rated power	60w

Turntable speed	800~1500rpm/min
Opening angle	180°
Spreading diameter	3-10m
Maximum current	3A
Rated Current	1A
Granule diameter	0.5-5mm
Motor	
KV Rating	45 rpm/V
Stator Size	138*25mm
Max. Thrust	57kg/Axis（70V，sea level）
Waterproof Rating	IPX6
Esc	
Max. Input Voltage	81V
Max. Input Current	200A(w/ Good Heat Dissipation)
Propeller	
Material	Nylon carbon fiber
Diameter × pitch	56*20 inch

Remote controller	
Model	ViuRC5
channel	14
Operation voltage	7.4V
radio frequency power	26dBm@2.4GHz, 24dBm@5GHz
Frequency Band	2.4GHz/5GHz
Weight	793g
Size	210×178×75mm

Display screen	5.5-inch LCD touch panel,Android 9.0, 2GB RAM
Battery capacity	7800mAh 7.4V
Endurance	6 hours
Charging port	TYPE-C
Battery	
Model	18S 30000mAh
Weight	13.5kg
Size	175*275*309mm
Capacity	30000mAh（2018 Wh）
Voltage	68.4V
Charging voltage	DC 78.3V
Charging Temperature	**5°C---65°C**
Charger	
Model	Duel channel intelligent charger
Size	583 x 412 x 435mm
Weight	23kg
Output channel quantity	2
Charge power	AC110V：Max 3600W；AC220V：Max 9000W
AC input voltage	AC 110~380V
Charge current	120A
Charging ambient temperature	5°C~45°C

The distance between user and products should be no less than 20cm

FCC STATEMENT :
This device has been tested and found to comply with the limits for a Class B digital device, pursuant to Part 15 of the FCC Rules. These limits are designed to provide reasonable protection against harmful interference in a residential installation. This device generates, uses and can radiate radio frequency energy and, if not installed and used in accordance with the instructions, may cause harmful interference to radio communications.
However, there is no guarantee that interference will not occur in a particular installation. If this device does cause harmful interference to radio or television reception, which can be determined by turning the device off and on, the user is encouraged to try to correct the interference by one or more of the following measures:
--Reorient or relocate the receiving antenna.
--Increase the separation between the device and receiver.
--Connect the device into an outlet on a circuit different from that to which the receiver is connected.
--Consult the dealer or an experienced radio/TV technician for help

Changes or modifications not expressly approved by the party responsible for compliance could void the user's authority to operate the equipment

FCCRadiationExposureStatement
Theantennasusedforthistransmittermustbeinstalledtoprovideaseparationdistanceofatleast20cmfromall personsandmust not be co-located for operating in conjunction with any other antenna or transmitter.