tp-link | tapo

User Guide

Indoor/Outdoor Home Security Wi-Fi Camera

©2023 TP-Link 1910013515 REV1.0.0

Contents

About This Guide 1
Introduction 2
Appearance 3
Before You Start 5
Set Up Your Camera 6
Set Up Using Amazon Frustration-Free Setup 7
Install Your Camera 11
Power Up Your Camera 13
Authentication 14

About This Guide

This guide provides a brief introduction to the Indoor/Outdoor Home Security Wi-Fi Camera and the Tapo app, as well as regulatory information.

Please note that features available in Tapo may vary by model and software version. Tapo availability may also vary by region. All images, steps, and descriptions in this guide are only examples and may not reflect your actual Tapo Camera experience.

Conventions

In this guide, the following convention is used:

Convention	Description
Blue	Key information appears in blue, including management page text such as menus, items, buttons and so on.
Underline	Hyperlinks are in blue and underlined. You can click to redirect to a website.
Note:	Ignoring this type of note might result in a malfunction or damage to the device.

More Info

- Specifications can be found on the product page at https://www.tapo.com.
- Our Technical Support and troubleshooting information can be found at https://www.tapo.com/support/.

Introduction

With an integrated starlight sensor, the Indoor/Outdoor Home Security Wi-Fi Camera captures low light images in incredible colorful detail. Place it in your living room, bedroom, baby's room, backyard, or front door for round-the-clock coverage and IP66 weatherproof construction: day, night, rain, or shine. Stay protected anywhere, anytime.

- Superior Starlight Color Night Vision – The highly sensitive starlight sensor captures higher-quality images even in low-light conditions.
- 2K QHD* – Capture sharper, more revealing images with 1.7x more pixels than 1080p.

  *Compatible with Alexa and Google Assistant supported displays. User experience is dependent on the connected device's specifications.
- Smart AI Detection – Smart AI identifies people, pets, vehicles, while also recognizing abnormal sounds, notifying users as needed.
- Two-Way Audio – Enables communication through a built-in microphone and speaker.
- Discreet Night Vision with 940nm IR LED – Enjoy unobtrusive night-time monitoring of your baby or pet with the barely-noticeable, low-intensity 940nm IR LED.
- Local* and Cloud** Storage Supported – Save recorded videos on the microSD card* (up to 512 GB) or by using Tapo Care cloud storage services.

  *microSD card needs to be purchased separately. Actual storage capacity depends on the size of the microSD card used.

  *Subscribe for cloud storage at https://www.tapo.com/tapocare/
- Color Night Vision with Spotlights – Reveals high-fidelity details and color at night with the embedded spotlights.
- Customizable Block Zones – Set customizable block zones to keep private areas from being monitored.
- Alarm System – Trigger lights and sounds as an alarm when motion is detected.
- Activity Zones – Notifies you when activity is detected in specific zones.

Appearance

Front

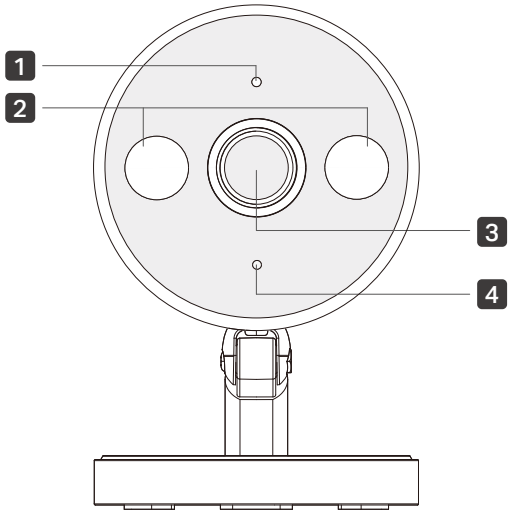

1 System LED

2 White Light LEDs

3 Lens

4 Microphone

Back

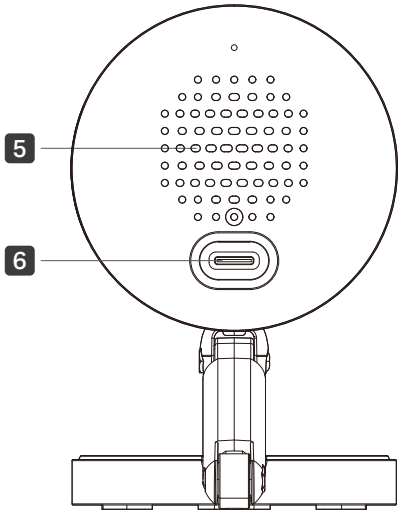

5 Speaker

6 USB Type-C Power Port

Side

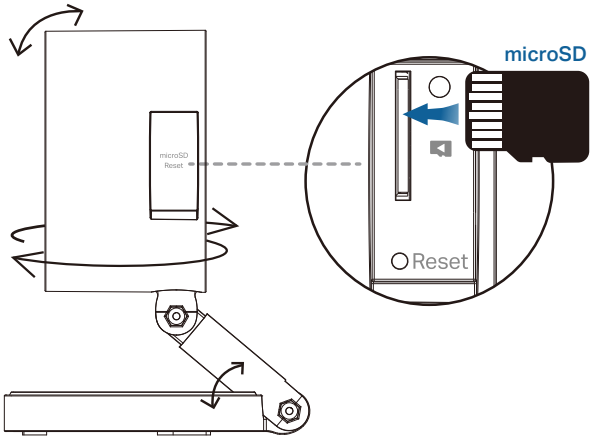

Adjust View

Tilt and rotate the camera and stand for your desired viewing angle.

microSD Card Slot

Open the cover. Insert a microSD card (not included) and initialize it on the Tapo app for local recording.

Reset

Open the cover. Use a pin to press and hold for at least 5 seconds to reset the camera to factory default settings.

System LED Indication

Solid red	Starting up
Blinking red and green	Ready for setup
Blinking red slowly	Connecting to Wi-Fi
Solid amber	Connected to Wi-Fi
Solid green	Connected to the cloud
Blinking red quickly	Camera resetting
Blinking green quickly	Camera updating

Before You Start

Position your camera's adjustable stand for setup.

Note: Peel off film from the camera before use.

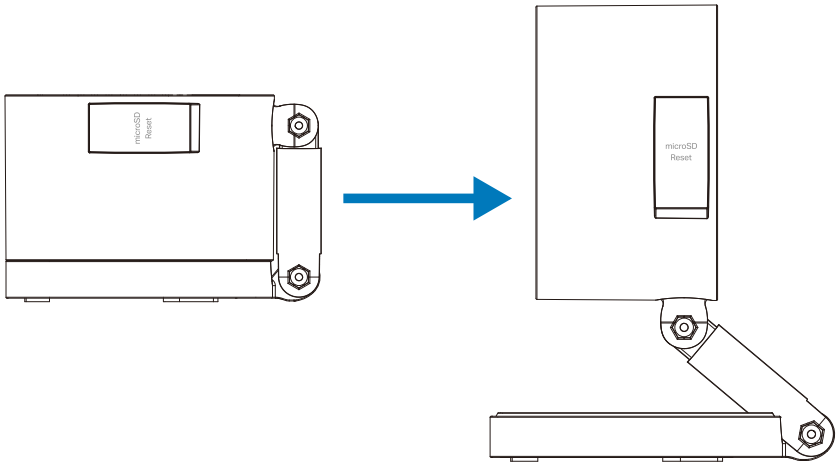

Set Up Your Camera

Follow the steps below to get started with your new camera.

Step 1. Download Tapo App

Get the Tapo app from the App Store or Google Play, or by scanning the QR code below.

Download on the App Store

GET IT ON Google Play

OR

Step 2. Log In

Open the app, and log in with your TP-Link ID. If you don't have an account, create one first.

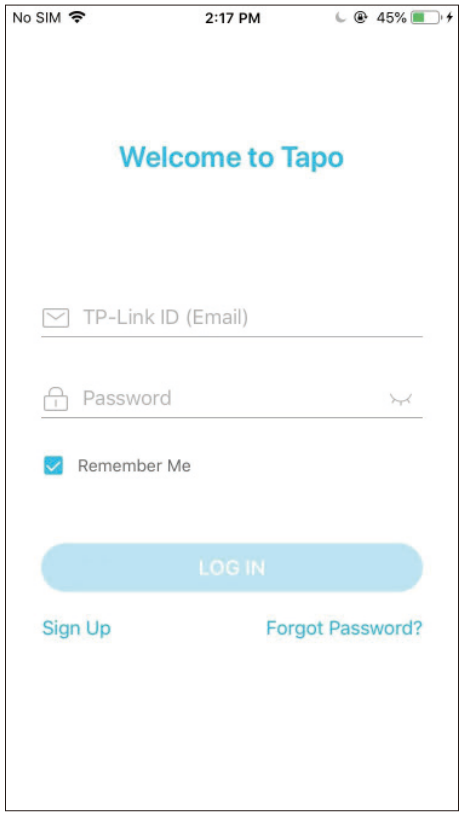

Step 3. Add Your Camera

Tap the ⊕ button in the app and search for your model. Follow the app instructions to complete setup.

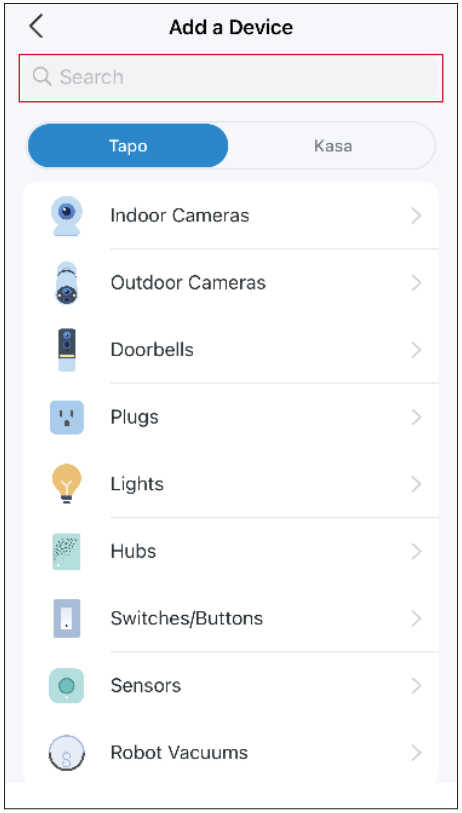

Set Up Using Amazon Frustration-Free Setup

What is Amazon Frustration-Free Setup?

Amazon Frustration-Free Setup can help connect and set up Tapo smart devices in fewer steps, without having to remember and re-enter your Wi-Fi password on each device.

To use this feature, confirm the following:

- The new Tapo device supports Amazon FFS.
- The new Tapo device is purchased from Amazon.
- You have an Amazon FFS enabled Alexa device or router.
- You have saved your Wi-Fi information to Amazon by using Alexa echo.
- Your Tapo device and router are on the same network as your Alexa echo.

LED Indications during Amazon Frustration-Free Setup

LED	Status
Blinking red and green	Ready for setup
Blinking amber	FFS setup in progress
Solid green	Working properly

If the LED does not turn solid green after a long time, you can try to add the Tapo device manually. (Press the Reset button on your Tapo device once. Then open the Tapo app, tap the + button on the page, select your device model, and follow the app instructions.)

How to use Amazon Frustration-Free Setup with Tapo devices

1. Open the Amazon Alexa app. Then tap More and select Skills & Games.

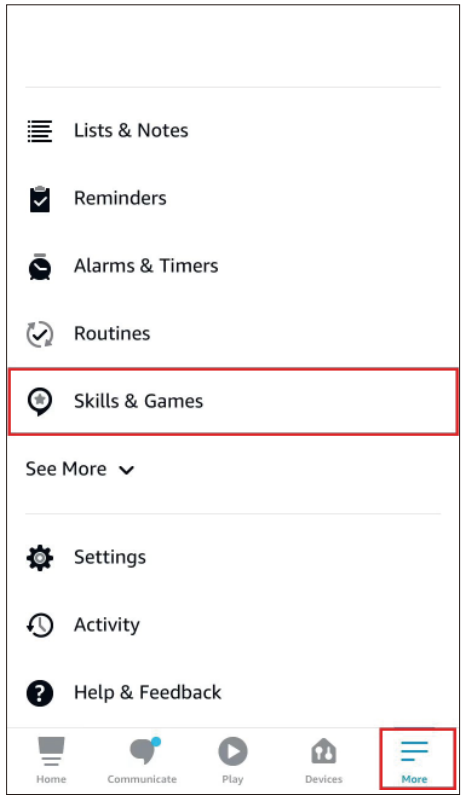

2. Enter Tapo in the search bar and choose Tapo.

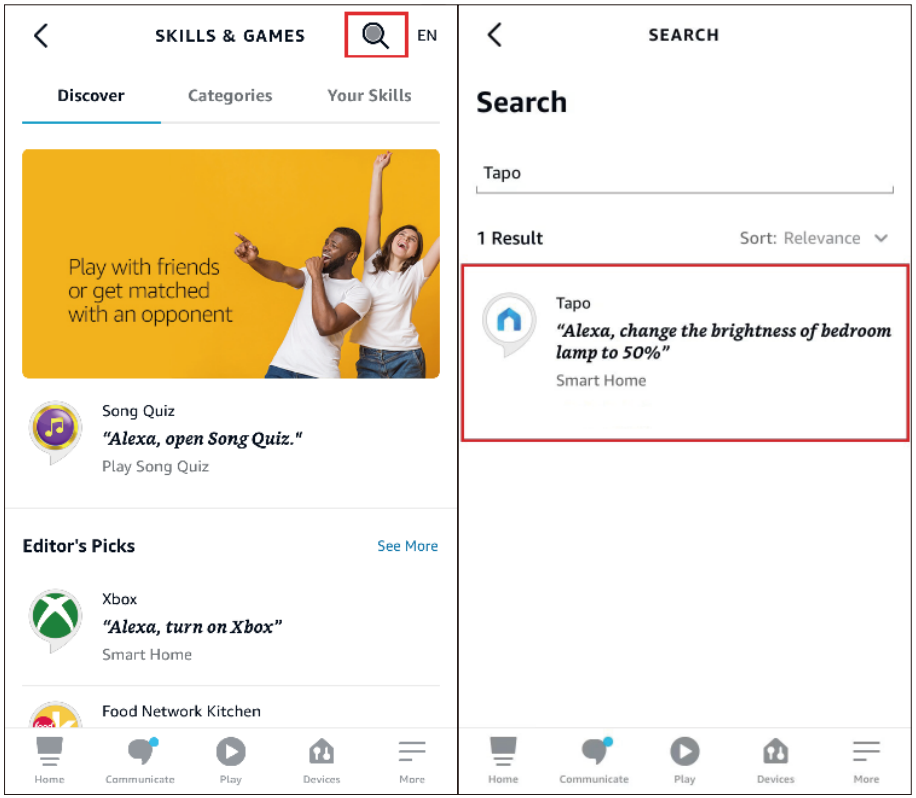

3. Tap the ENABLE TO USE button.

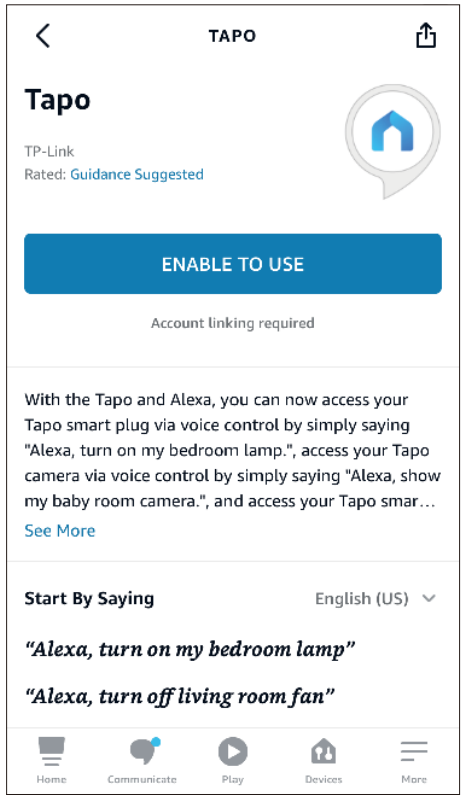

4. Log in with your TP-Link ID that has bound to your Tapo device, and tap Authorize. After authorized successfully, the message Tapo has been successfully linked will come up.

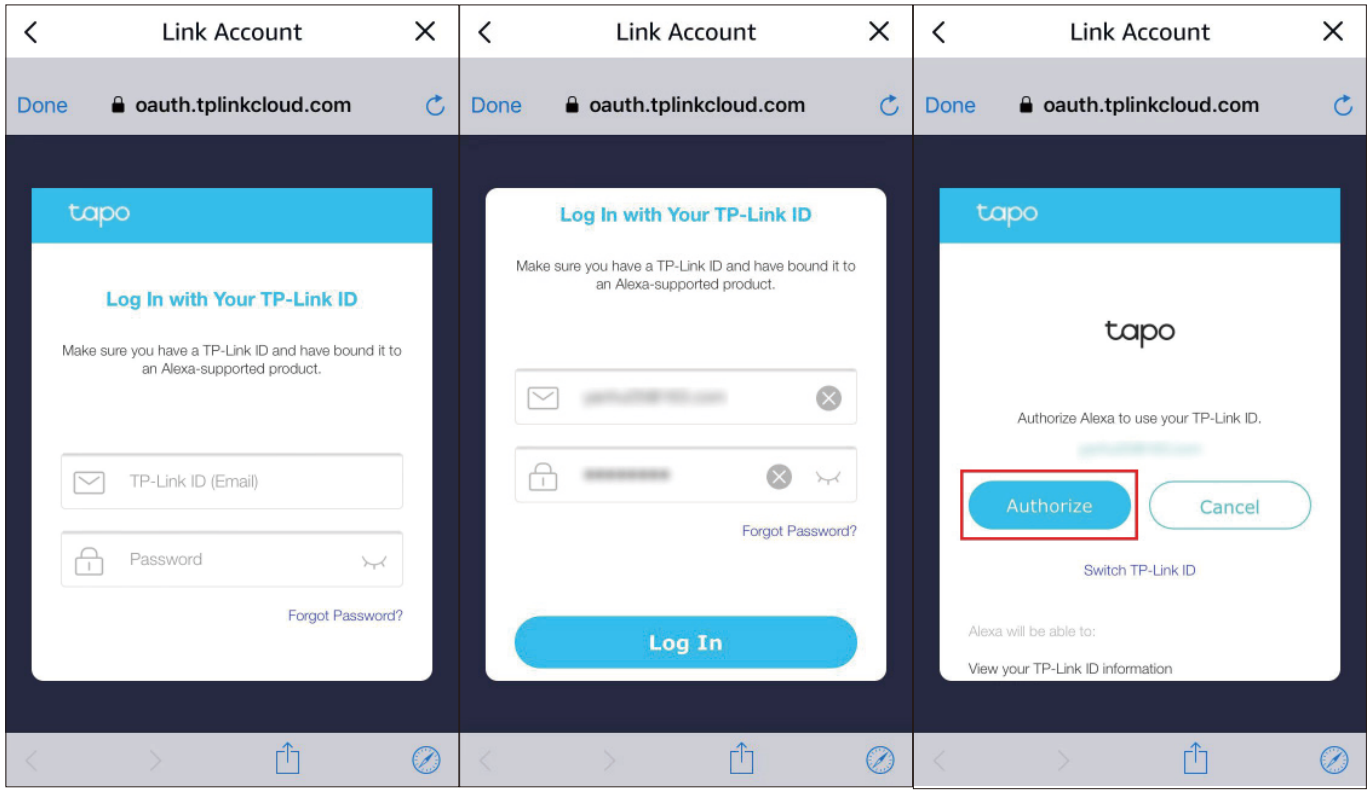

5. Plug in your Tapo device and the setup will complete automatically in two minutes.

For setting up more Tapo devices, just plug in and enjoy!

Done!

If this device displays on the Home page in the Tapo app, it indicates this device has been successfully associated with your Amazon account and joined your Wi-Fi network automatically.

If this device does not display on the Home page in the Tapo app, try setting it up manually. (Tap the + button on the page, select your device model, and then follow the app instructions.)

Install Your Camera

When you finish adding your camera in the Tapo app, you can set it on a table or shelf. You can also mount it using its versatile magnetic base. Follow the steps below to install your new camera.

Option 1: Set on a table or shelf

1. Place the camera on your desired table or shelf.
2. Adjust the stand angle to the notch position in the base for more stability.

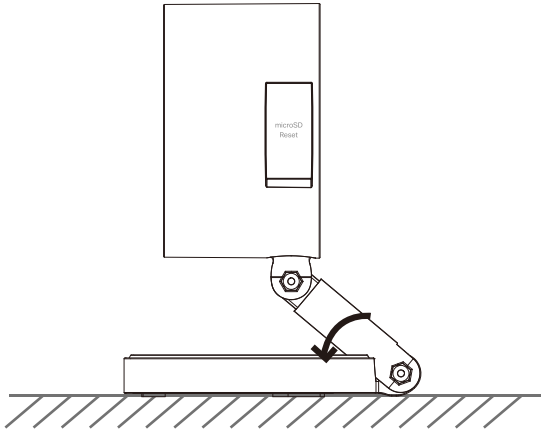

Option 2: Mount to metallic surfaces

The camera has a magnet in its base, allowing magnetic attachment to metallic surfaces.

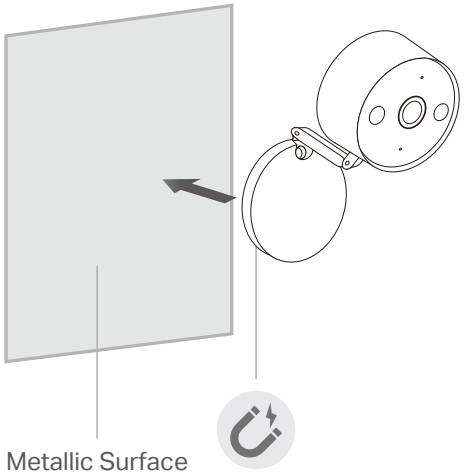

Option 3: Stick to a clean wall

1. Attach the included adhesive to the back of the metal plate properly.

   Note: The adhesive is for one-time use. Avoid re-using the adhesive to ensure its adhesion.

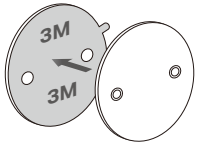

2. Wipe off the dust from the surface, stick the metal plate with the adhesive to the clean wall, and press it down for 15 seconds to ensure the plate is firmly attached. Then attach the camera to the plate.

   Note: This is applicable with tile, glass, marble, metal, stainless steel, and hard wall surfaces.

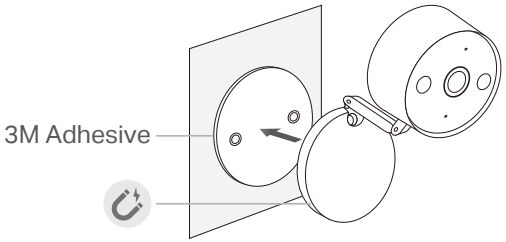

Option 4. Mount to the wall (with or without the metal plate)

1. Stick the mounting template to the desired mounting place. Drill **two** holes according to the template.

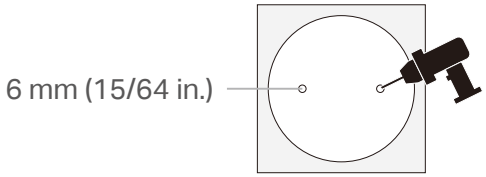

2. Insert two anchors into the holes and use the screws to affix the **metal plate** over the anchors. Then attach the camera to the plate.

   Note: Ensure the metal plate's concave-holed side faces the magnetic base.

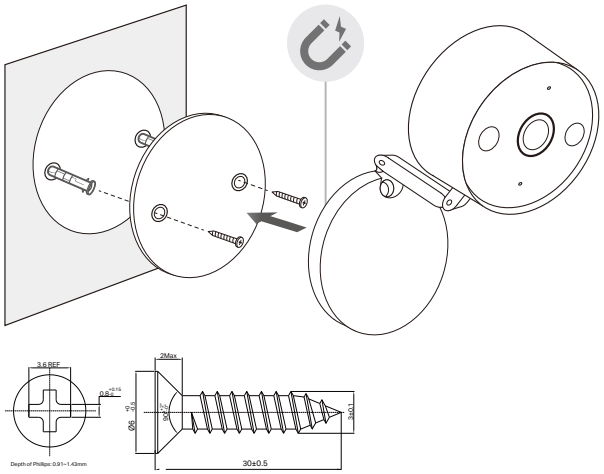

OR

1. Drill **one** hole in the desired mounting place.

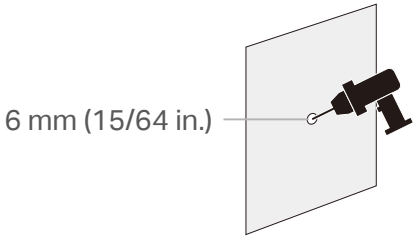

2. Insert one anchor into the hole and use one screw to affix the **camera** over the anchor.

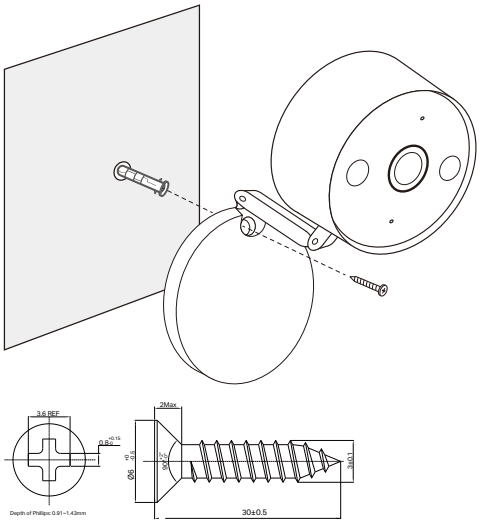

Power Up Your Camera

After installing your camera, follow the steps below to power up your camera.

1. **Firmly plug in** the power connector to the power port of the camera, and ensure no gap exists.

Note: When plugging in the power connector, you may feel the resistance from the silicon cork inside the power port because of the waterproof design. It is necessary to plug in firmly until there is no gap between them.

2. Fix the power cord with adhesive tape or the provided cable clamp and screw.

Note: To ensure a firm connection, fix the power cord at a distance of about 25 cm away from the power connector.

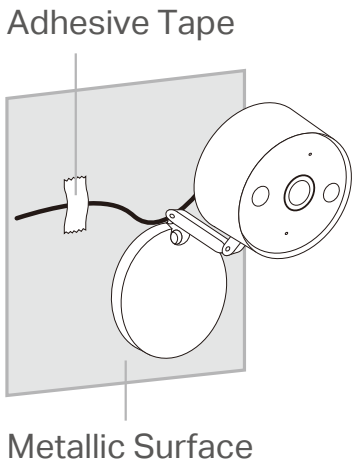

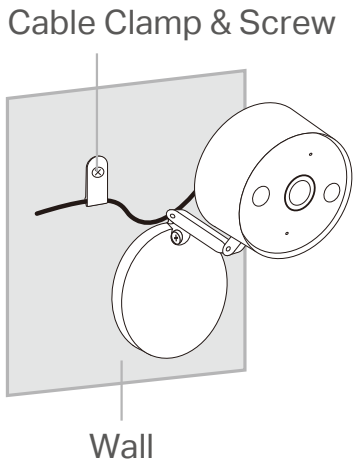

Authentication

FCC compliance information statement

Product Name: Indoor/Outdoor Home Security Wi-Fi Camera
Model Number: Tapo C120

Component Name	Model
I.T.E. Power Supply	A8-501000

Responsible Party:
TP-Link USA Corporation
Address: 10 Mauchly, Irvine, CA 92618
Website: http://www.tp-link.com/us/
Tel: +1 626 333 0234
Fax: +1 909 527 6804
E-mail: sales.usa@tp-link.com

This equipment has been tested and found to comply with the limits for a Class B digital device, pursuant to part 15 of the FCC Rules. These limits are designed to provide reasonable protection against harmful interference in a residential installation. This equipment generates, uses and can radiate radio frequency energy and, if not installed and used in accordance with the instructions, may cause harmful interference to radio communications. However, there is no guarantee that interference will not occur in a particular installation. If this equipment does cause harmful interference to radio or television reception, which can be determined by turning the equipment off and on, the user is encouraged to try to correct the interference by one or more of the following measures:

- Reorient or relocate the receiving antenna.
- Increase the separation between the equipment and receiver.
- Connect the equipment into an outlet on a circuit different from that to which the receiver is connected.
- Consult the dealer or an experienced radio/ TV technician for help.

This device complies with part 15 of the FCC Rules. Operation is subject to the following two conditions:

1. This device may not cause harmful interference.

2. This device must accept any interference received, including interference that may cause undesired operation.

Any changes or modifications not expressly approved by the party responsible for compliance could void the user's authority to operate the equipment.

Note: The manufacturer is not responsible for any radio or TV interference caused by unauthorized modifications to this equipment. Such modifications could void the user's authority to operate the equipment.

FCC RF Radiation Exposure Statement

This equipment complies with FCC RF radiation exposure limits set forth for an uncontrolled environment. This device and its antenna must not be co-located or operating in conjunction with any other antenna or transmitter.

"To comply with FCC RF exposure compliance requirements, this grant is applicable to only Mobile Configurations. The antennas used for this transmitter must be installed to provide a separation distance of at least 20 cm from all persons and must not be co-located or operating in conjunction with any other antenna or transmitter."

We, **TP-Link USA Corporation**, has determined that the equipment shown as above has been shown to comply with the applicable technical standards, FCC part 15. There is no unauthorized change is made in the equipment and the equipment is properly maintained and operated.

Issue Date: 2023-10-08

FCC compliance information statement
Product Name: I.T.E. Power Supply
Model Number: A8-501000
Responsible Party:
TP-Link USA Corporation
Address: 10 Mauchly, Irvine, CA 92618
Website: http://www.tp-link.com/us/
Tel: +1 626 333 0234
Fax: +1 909 527 6804
E-mail: sales.usa@tp-link.com

This equipment has been tested and found to comply with the limits for a Class B digital device, pursuant to part 15 of the FCC Rules. These limits are designed to provide reasonable protection against harmful interference in a residential installation. This equipment generates, uses and can radiate radio frequency energy and, if not installed and used in accordance with the instructions, may cause harmful interference to radio communications. However, there is no guarantee that interference will not occur in a particular installation. If this equipment does cause harmful interference to radio or television reception, which can be determined by turning the equipment off and on, the user is encouraged to try to correct the interference by one or more of the following measures:

- Reorient or relocate the receiving antenna.
- Increase the separation between the equipment and receiver.
- Connect the equipment into an outlet on a circuit different from that to which the receiver is connected.
- Consult the dealer or an experienced radio/ TV technician for help.

This device complies with part 15 of the FCC Rules. Operation is subject to the following two conditions:

1. This device may not cause harmful interference.
2. This device must accept any interference received, including interference that may cause undesired operation.

Any changes or modifications not expressly approved by the party responsible for compliance could void the user's authority to operate the equipment.

We, **TP-Link USA Corporation**, has determined that the equipment shown as above has been shown to comply with the applicable technical standards, FCC part 15. There is no unauthorized change is made in the equipment and the equipment is properly maintained and operated.

Issue Date: 2023-10-08

CE Mark Warning

CE

This is a class B product. In a domestic environment, this product may cause radio interference, in which case the user may be required to take adequate measures.

OPERATING FREQUENCY (the maximum transmitted power)

2412MHz—2472MHz (20dBm)

EU Declaration of Conformity

TP-Link hereby declares that the device is in compliance with the essential requirements and other relevant provisions of directives 2014/53/EU, 2009/125/EC, 2011/65/EU and (EU)2015/863.

The original EU Declaration of Conformity may be found at https://www.tapo.com/en/support/ce/.

RF Exposure Information

This device meets the EU requirements (2014/53/EU Article 3.1a) on the limitation of exposure of the general public to electromagnetic fields by way of health protection.

The device complies with RF specifications when the device used at 20 cm from your body.

UKCA Mark

UK
CA

UK Declaration of Conformity

TP-Link hereby declares that the device is in compliance with the essential requirements and other relevant provisions of the Radio Equipment Regulations 2017.

The original UK Declaration of Conformity may be found at https://www.tapo.com/support/ukca/.

FR
ÉLÉMENTS D'EMBALLAGE
À SÉPARER ET À DÉPOSER
DANS LE BAC DE TRI
BAC DE TRI

Korea Warning Statements:

당해 무선설비는 운용중 전파혼신 가능성이 있음.

NCC Notice & BSMI Notice

注意！

取得審驗證明之低功率射頻器材，非經核准，公司、商號或使用者均不得擅自變更頻率、加大功率或變更原設計之特性及功能。

低功率射頻器材之使用不得影響飛航安全及干擾合法通信；經發現有干擾現象時，應立即停用，並改善至無干擾時方得繼續使用。

前述合法通信，指依電信管理法規定作業之無線電通信。

低功率射頻器材須忍受合法通信或工業、科學及醫療用電波輻射性電機設備之干擾。

為避免本器材影像畫面遭偷窺或擷取，本器材使用者應先修改預設密碼，並定期更新密碼。

安全諮詢及注意事項

- 請使用原裝電源供應器或只能按照本產品注明的電源類型使用本產品。
- 清潔本產品之前請先拔掉電源線。請勿使用液體、噴霧清潔劑或濕布進行清潔。
- 注意防潮，請勿將水或其他液體潑灑到本產品上。
- 插槽與開口供通風使用，以確保本產品的操作可靠並防止過熱，請勿堵塞或覆蓋開口。
- 請勿將本產品置放於靠近熱源的地方。除非有正常的通風，否則不可放在密閉位置中。
- 不要私自拆開機殼或自行維修，如產品有故障請與原廠或代理商聯繫。
- 電源供應器应使用在环境温度低於或等於40°C的室內。

限用物質含有情況標示聲明書

設備名稱：Indoor/Outdoor Home Security Wi-Fi Camera Equipment name				型號（型式）：Tapo C120 Type designation (Type)		
單元 Unit	限用物質及其化學符號 Restricted substances and its chemical symbols					
	鉛 Lead (Pb)	汞 Mercury (Hg)	鎘 Cadmium (Cd)	六價鉻 Hexavalent chromium (Cr^{+6})	多溴聯苯 Polybrominated biphenyls (PBB)	多溴二苯醚 Polybrominated diphenyl ethers (PBDE)
PCB	○	○	○	○	○	○

外殼	○	○	○	○	○	○
電源供應器	—	○	○	○	○	○
其他及其配件	—	○	○	○	○	○

備考 1.〝超出 0.1 wt %〞及〝超出 0.01 wt %〞係指限用物質之百分比含量超出百分比含量基準值

Note 1：“Exceeding 0.1 wt %” and “exceeding 0.01 wt %” indicate that the percentage content of the restricted substance exceeds the reference percentage value of presence condition.

備考 2.〝○〞係指該項限用物質之百分比含量未超出百分比含量基準值。

Note 2：“○” indicates that the percentage content of the restricted substance does not exceed the percentage of reference value of presence.

備考 3.〝—〞係指該項限用物質為排除項目。

Note 3：The “—” indicates that the restricted substance corresponds to the exemption.

Продукт сертифіковано згідно с правилами системи УкрСЕПРО на відповідність вимогам нормативних документів та вимогам, що передбачені чинними законодавчими актами України.

EAC

Safety Information

- Do not use damaged charger or USB cable to charge the device.
- Do not use any other chargers than those recommended.
- Do not use the device where wireless devices are not allowed.
- Adapter shall be easily accessible.
- Use only power supplies which are provided by manufacturer and in the original packing of this product. If you have any questions, please don't hesitate to contact us.
- Keep the device away from fire or hot environments. DO NOT immerse in water or any other liquid.
- Do not disassemble, repair or modify the product.
- Do not use the product if the casing has been broken. Danger of electric shock.
- Never touch the product with wet hands.
- Do not place near automatically controlled devices such as fire alarms. Radio waves emitted from this product may cause such devices to malfunction resulting in an accident.
- Observe restrictions on using wireless products in fuel depots, chemical plants or when blasting operations are in progress.
- Do not use liquid to clean the product. Only use a dry cloth.
- Never put metal objects inside the product. If a metal object enters the product turn off the circuit breaker and contact an authorised electrician.
- This product is not intended to be used when providing medical care. Consult the manufacturer of any personal medical devices, such as pacemakers or hearing aids to determine if they are adequality shielded from external RF (radio frequency) energy.
- Do not use this product in health care facilities. Hospitals or health care facilities may be using equipment that could be sensitive to external RF energy.
- Do not place heavy objects on top of the product.
- When you leave the product unused for a long time unplug the product from the power outlet.
- This product may interfere with other electronic products such as TV, radios, personal computers, phones or other wireless devices.
- Adapter should be used indoors where the ambient temperature is lower than or equal to 40 ºC.
- Operating Temperature: -20 ºC ~ 45 ºC (-4 °F ~ 113 °F)
- When mounting the camera magnetically, we recommend installing it no higher than 2 meters.

Please read and follow the above safety information when operating the device. We cannot guarantee that no accidents or damage will occur due to improper use of the device. Please use this product with care and operate at your own risk.

Canadian Compliance Statement
This device contains licence-exempt transmitter(s)/receiver(s) that comply with Innovation, Science and Economic Development Canada’s licence-exempt RSS(s). Operation is subject to the following two conditions:
(1) This device may not cause interference.
(2) This device must accept any interference, including interference that may cause undesired operation of the device.
L’émetteur/récepteur exempt de licence contenu dans le présent appareil est conforme aux CNR d’Innovation, Sciences et Développement économique Canada applicables aux appareils radio exempts de licence. L’exploitation est autorisée aux deux conditions suivantes :
1) L’appareil ne doit pas produire de brouillage;
2) L’appareil doit accepter tout brouillage radioélectrique subi, même si le brouillage est susceptible d’en compromettre le fonctionnement.

Radiation Exposure Statement:
This equipment complies with IC radiation exposure limits set forth for an uncontrolled environment. This equipment should be installed and operated with minimum distance 20cm between the radiator & your body.
Déclaration d’exposition aux radiations:
Cet équipement est conforme aux limites d’exposition aux rayonnements IC établies pour un environnement non contrôlé. Cet équipement doit être installé et utilisé avec un minimum de 20 cm de distance entre la source de rayonnement et votre corps.
CAN ICES-3 (B)/NMB-3(B)

Explanation of the symbols on the product label

Note: The product label is on the bottom of the product and its power supply. Symbols may vary from products.

Symbol	Explanation
	Class II equipment
	Class II equipment with functional earthing
	Alternating current
	DC voltage
	Polarity of output terminals
	Indoor use only
	Dangerous voltage
	Caution, risk of electric shock
	Energy efficiency Marking
	Protective earth
	Earth
	Frame or chassis

Symbol	Explanation
	Functional earthing
	Caution, hot surface
	Caution
	Operator's manual
	Stand-by
	"ON"/"OFF" (push-push)
	Fuse
N	Fuse is used in neutral N
	RECYCLING This product bears the selective sorting symbol for Waste electrical and electronic equipment (WEEE). This means that this product must be handled pursuant to European directive 2012/19/EU in order to be recycled or dismantled to minimize its impact on the environment. User has the choice to give his product to a competent recycling organization or to the retailer when he buys a new electrical or electronic equipment.
	Caution, avoid listening at high volume levels for long periods
	Disconnection, all power plugs

Symbol	Explanation
m	Switch of mini-gap construction
μ	Switch of micro-gap construction (for US version) Switch of micro-gap / micro-disconnection construction (for other versions except US)
ε	Switch without contact gap (Semiconductor switching device)