Quick Installation Guide

BE7200 Dual-Band Wi-Fi 7 XGS-PON Router

* Images may differ from actual products.

Connect the Hardware

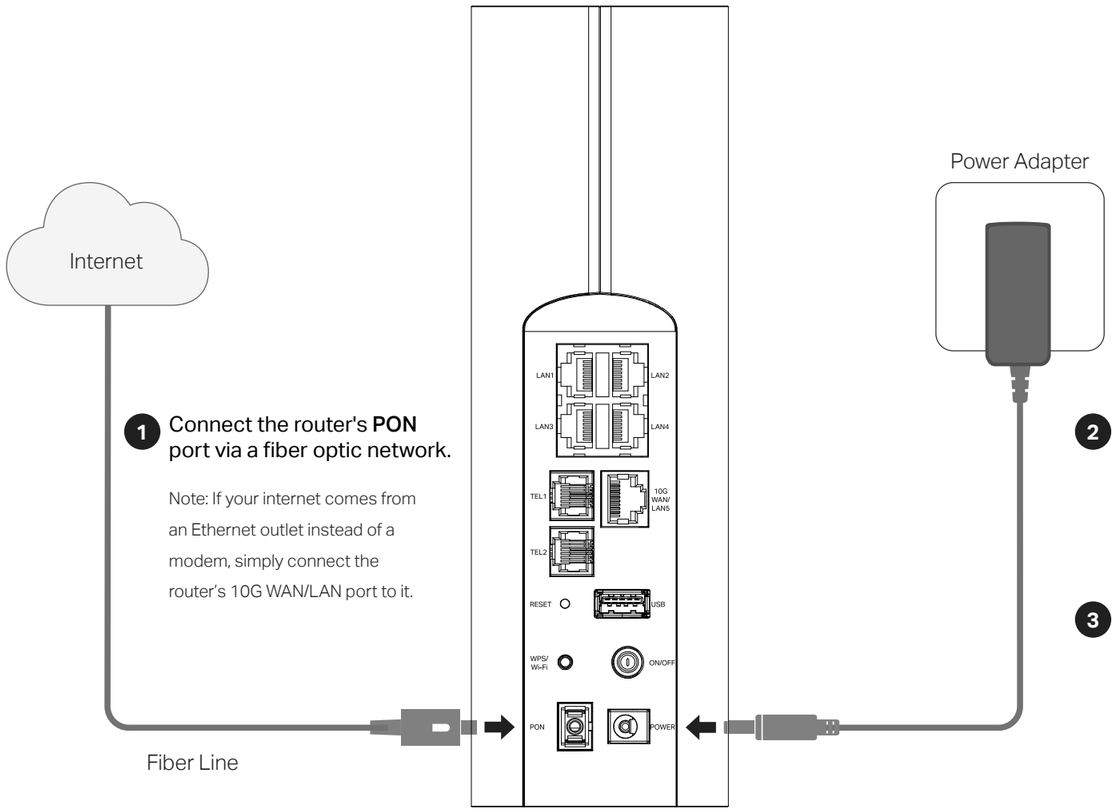

1 Connect the router's **PON** port via a fiber optic network.

Note: If your internet comes from an Ethernet outlet instead of a modem, simply connect the router's 10G WAN/LAN port to it.

2 Connect the power adapter to the router and press the **ON/OFF** button to turn it on.

3 Verify that the hardware connection is correct by checking the following LEDs.

Power: Solid Blue

Fiber: Solid Blue or Flashing Blue

Keep the router vertical

Configure the Router

Method 1: Via TP-Link Aginet App

1. Download the Aginet app.

You can easily set up and manage your network through the Aginet app. Search for Aginet on the Apple app Store or Google Play, or simply scan the QR code below. Download and install the Aginet app.

Download on the App Store

GET IT ON Google Play

or

Scan for Aginet

Aginet

2. Open the Aginet app and log in with your TP-Link ID.

Note: This step is optional. If you don't have an account, you may choose to create a TP-Link ID, or simply manage your device without it. To enjoy a more complete service from TP-Link, bind your TP-Link ID to the router.

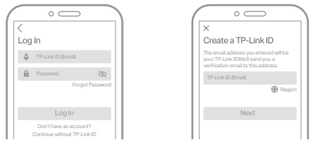

3. Set up your network

Tap **Create a Network** and find the product label on the bottom of your Aginet device.

For product labels without a QR code, you can select your device type and choose to connect your device to a modem or a router. Follow the steps to complete the setup and connect to the internet.

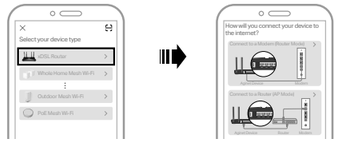

For product labels that have a QR code, tap Scan icon and scan it to set up faster.

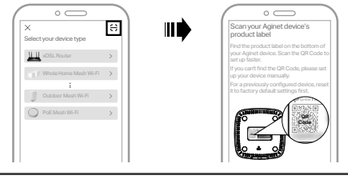

Note: Please turn the page for additional methods.

Enjoy the Internet

Now you can enjoy your internet.

If you are provided with VoIP phone service and want to make telephone calls via internet, flip to the next page for detailed instructions.

Configure the Router (continued)

Method 2: Via a Web Browser

1. Connect your Laptop/PC/Mobile phone to the router wirelessly or with an Ethernet cable, or simply scan the QR code.

The QR code, default wireless network name (SSID), and password are printed on the product label at the bottom of the router.

2. Launch a web browser, and enter http://tplinkmodem.net or http://192.168.1.1 in the address bar. Create your own login password and log in to the device.

Notes:
1. If the login window does not appear, please refer to **Q1** of **FAQ** in this guide.
2. For ISP customized routers, the login account name and password may be printed on the product label.

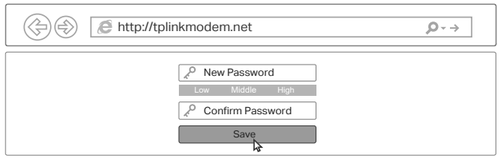

3. Follow the Quick Setup instructions to set up your network.

Button Explanation

Button	Description
RESET	Press and hold this button for at least 5 seconds to reset the router to its factory default settings.
WPS/ Wi-Fi	Press and hold for less than 2 seconds to start WPS synchronization. Press and hold for more than 2 seconds to turn Wi-Fi on or off.

Make Telephone Calls via Internet

1. Register the telephone number.

A Visit **http://tplinkmodem.net** or **http://192.168.1.1**, and log in with the password you have set.
B Go to **Advanced** > **Telephony** > **Telephone Numbers** to open the configuration page. Click **Add**.
C Select **Other** from the dropdown list, enter the information provided by your telephony service provider, and click **OK** to save the settings.

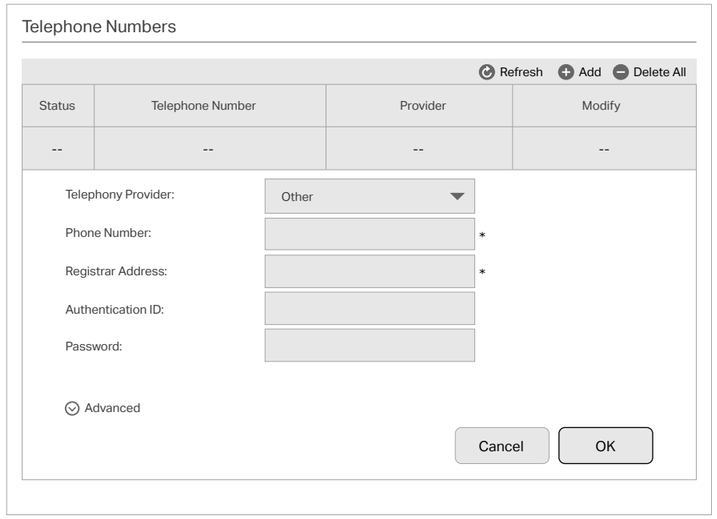

2. Connect your telephone to the **TEL** port on the back panel. You can now make phone calls over the internet.

LED Indicators

LED	Status	Indication
Power	On Off	Power is on. Power is off.
Fiber	Solid Blue Flashing Blue Solid Red Off	The router is registered with the OLT. The router is trying to register with the OLT. The power of the optical module transmitter is turned off. The router is not yet registered with the OLT.
Internet	Solid Blue Flashing Blue Solid Red Off	The Internet connection is available. The authentication is in progress. The authentication is failed. No Internet connection or the router works on Bridge mode.
2.4G	On Flashing Off	The 2.4 GHz wireless function is working properly. WPS connection is in progress(about 2 minutes). The 2.4 GHz wireless function is disabled.
5G	On Flashing Off	The 5 GHz wireless function is working properly. WPS connection is in progress(about 2 minutes). The 5 GHz wireless function is disabled.
LAN	On Off	A device is connected to the LAN port. No device is connected to the LAN port.
PHONE	Solid Blue Flashing Blue Quickly Flashing Blue Slowly Alternating Red & Blue Solid Red Off	The SIP account is registered successfully. The phone is ringing. The phone is on-hook and there are voice messages. At least one SIP account registration failed. All SIP account registration failed. There is no SIP configuration.
USB	On Flashing Off	The USB device is ready to use. A new USB device is being identified. No USB device is plugged into the USB port.

FAQ (Frequently Asked Questions)

Q1. What can I do if I cannot access the web management page?
A1. Make sure that the computer is properly connected to the router via the Ethernet cable.
A2. Make sure that the computer connected to the router is set to **obtain an IP address automatically**.
A3. Make sure that **http://tplinkmodem.net** or **http://192.168.1.1** is correctly entered, or use another web browser and try again.
A4. Disable then enable the network adapter being used.
A5. Restore the router to its factory default settings and reconfigure the router by following the instructions in this Quick Installation Guide.

Q2. What can I do if I cannot access the Internet?
A1. Make sure that all cables are connected properly and securely to the router.
A2. Check the GPON LED and make sure that it is lit and stable, indicating that the router is registered with the ISP. If not, make sure that the provided **GPON SN** and/or **GPON Password** are entered correctly in the **Advanced** > **Network** > **GPON Settings** page.
A3. Disconnect and reconnect the fiber cable to the router. Wait for 2 minutes and try again.
A4. Make sure that the computer connected to the router is set to **obtain an IP address automatically**.
A5. Contact your ISP if the problem still exists.

Q3. How do I restore my router to its factory default settings?
A. With the router powered on, use a pin to press and hold the **Reset** button on the back panel of the router for about 5 seconds until there is a obvious change of LEDs, then release the button.

Q4. What can I do if I forget my web management page or password?
A. Refer to Q3 to restore the router then set a new password using 6 - 32 characters.

Q5. What can I do if I forget my wireless network password?
A1. The default Wireless Password is printed on the product label of the router.
A2. If the default Wireless Password has been changed, log in to the router's web management page and go to **Basic** > **Wireless** to retrieve or reset your password.

For technical support, user guides, and other information, please visit https://www.tp-link.com/en/support/download/, or scan the QR code.

EU Declaration of Conformity

TP-Link hereby declares that the device is in compliance with the essential requirements and other relevant provisions of directives 2014/53/EU, 2009/125/EC, 2011 /65/EU and (EU) 2015/863.
The original EU declaration of conformity may be found at **https://www.tp-link.com/en/support/ce/**

UK Declaration of Conformity

TP-Link hereby declares that the device is in compliance with the essential requirements and other relevant provisions of the Radio Equipment Regulations 2017.
The original UK declaration of conformity may be found at **https://www.tp-link.com/support/ukca/**

Safety Information

- Keep the device away from water, fire, humidity or hot environments.
- Do not attempt to disassemble, repair, or modify the device. If you need service, please contact us.
- Do not use the device where wireless devices are not allowed.
- Do not use damaged charger or USB cable to charge the device.
- Do not use any other chargers than those recommended.
- Adapter shall be installed near the equipment and shall be easily accessible.

Please read and follow the above safety information when operating the device. We cannot guarantee that no accidents or damage will occur due to improper use of device. Please use this product with care and operate at your own risk.

©2024 TP-Link 7109506062 REV1.0.1